VENEZIA

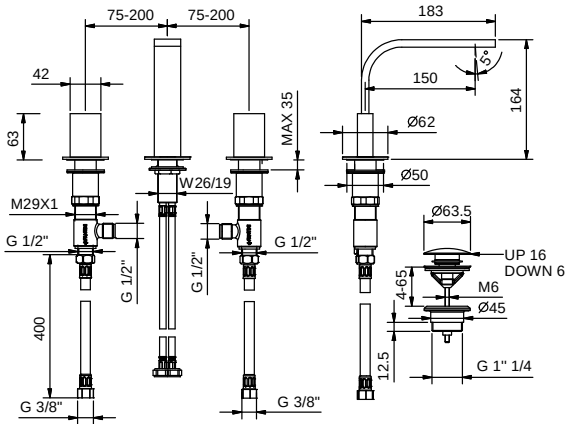

ART. N504S

3-hole washbasin mixer - VENEZIA IN

- spout projection 15 cm
- without handles
- flow restrictor 5 l/min at 3 bar
- 90° ceramic cartridge
- flexible supply lines
- WITH pop-up WASTE

NOTE: handles to be ordered separarely,pls. refer to the ''H andles'' section

Date

Project/Comments:

Finishing:

☐ Chrome	29 02 N504S
☐ Polished Nickel PVD	29 95 N504S
☐ Matt Gun Metal PVD	29 P5 N504S
☐ Matt British Gold PVD	29 P6 N504S
☐ Matt Copper PVD	29 P9 N504S
☐ Gold Plus	29 01 N504S