VENEZIA

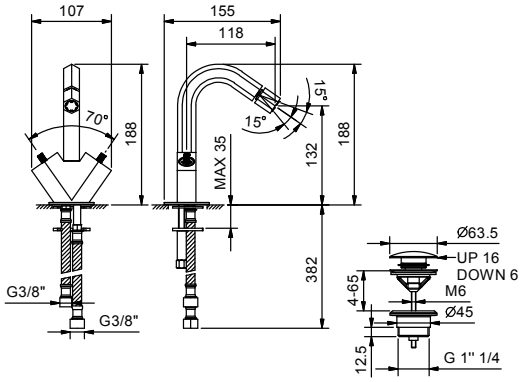

ART. N462SF

Single-hole bidet mixer

- spout projection 12 cm
- without handles
- flow restrictor 5 l/min at 3 bar
- 90° ceramic cartridge
- articulated aerator
- flexible supply lines
- WITH pop-up WASTE

NOTE: handles to be ordered separarely,pls. refer to the "H andles" section

Date

Project/Comments:

• articulated aerator

Pressure(bar)	Flow rate (l/min)
0.5	3.5
1	4.7
2	5.5
3	5.6
4	5.64

Finishing:

☐ Chrome	29 02 N462SF
☐ Polished Nickel PVD	29 95 N462SF
☐ Matt Gun Metal PVD	29 P5 N462SF
☐ Matt British Gold PVD	29 P6 N462SF
☐ Matt Copper PVD	29 P9 N462SF
☐ Gold Plus	29 01 N462SF