VENEZIA

FANTINI
RUBINETTI

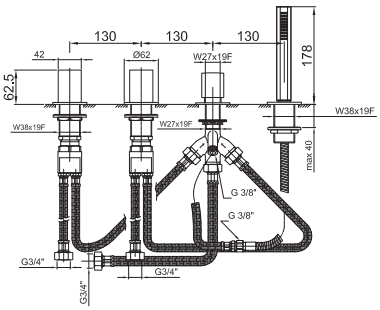

ART. N467S

Deck-mount bathtub mixer

- without handles
- without spout
- 4-hole
- 2-way diverter with pushing button
- VENEZIA handshower
- 150 cm flexible
- 90° ceramic cartridge
- 3/4'' inlets
- flexible supply lines

NOTE: handles to be ordered separarely,pls. refer to the ''H andles'' section

Finishing:

☐ Chrome	29 02 N467S
☐ Polished Nickel PVD	29 95 N467S
☐ Matt Gun Metal PVD	29 P5 N467S
☐ Matt British Gold PVD	29 P6 N467S
☐ Matt Copper PVD	29 P9 N467S
☐ Gold Plus	29 01 N467S

Date

Project/Comments:

• Integrated aerator

Pressure(bar)	Flow rate (l/min)
0.5	7.2
1	11.56
2	16.59
3	20.5
4	23.55

• handshower

Pressure(bar)	Flow rate (l/min)
0.5	4.16
1	5.85
2	8.15
3	9.25
4	8.52