NOSTROMO SMALL

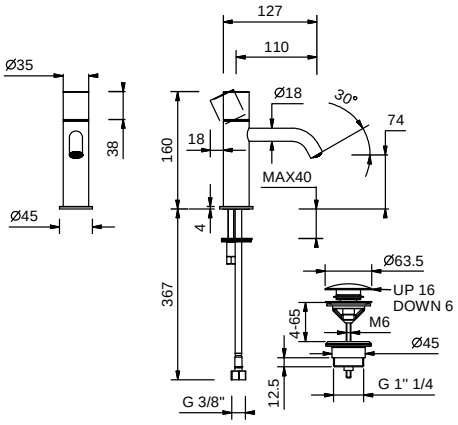

ART. G904F

Single-hole washbasin mixer

- spout projection 11 cm
- handles: CYLINDRICAL and LEVER
- flow restrictor 5 l/min at 3 bar
- flexible supply lines
- WITH pop-up WASTE

Date

Project/Comments:

Finishing:

☐ Chrome	50 02 G904F
☐ Matt Black	50 13 G904F
☐ Matt Gun Metal PVD	50 P5 G904F
☐ Matt British Gold PVD	50 P6 G904F
☐ Matt Copper PVD	50 P9 G904F
☐ Deep Black PVD	50 S1 G904F
☐ Pure Brass PVD	50 Q7 G904F
☐ Raw Metal PVD	50 Q8 G904F
☐ Brushed Stainless Steel	50 93 G904F

• Integrated aerator

Pressure(bar)	Flow rate (l/min)
0.5	2.34
1	3.81
2	5.09
3	5.1
4	5.38