ART. 6701B+6701A

Waterfall showerhead

- ALA
- base material: stainless steel
- PARAPAN® slide
- wall-mount
- 1/2" inlet
- suitable for bath filling

NOTE: conditions necessary for the correct functioning:Flow Rate: between 12 l/min and 26 l/min

Date

Project/Comments:

External piece

☐ Chrome	82 02 6701B
☐ Matt Black	82 13 6701B
☐ Matt Gun Metal PVD	82 P5 6701B
☐ **Brushed Stainless Steel**	82 93 6701B

Built-in piece

☐	82 00 6701A

TOTAL PRICE

☐ Chrome	82 02 6701B
☐ Matt Black	82 13 6701B
☐ Matt Gun Metal PVD	82 P5 6701B
☐ Brushed Stainless Steel	82 93 6701B

ART. 6701B+6701A

Waterfall showerhead

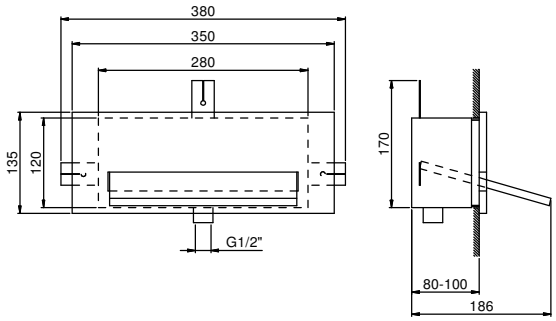

• waterfall

Pressure(bar)	Flow rate (l/min)
0.5	8.5
1	9.8
2	12
3	16
4	18