AL/23

ABOUTWATER
Boffi FANTINI





ART. B481B+M585A

Built-in shower mixer

- handles
- 2-way diverter with turning knob
- 1/2'' inlets
- soundproof

Date

Project/Comments:

External piece

☐ Chrome	26 02 B481B
☐ Matt Black	26 13 B481B

Built-in piece

☐	44 00 M585A

TOTAL PRICE

☐ Chrome	26 02 B481B
☐ Matt Black	26 13 B481B

AL/23

ABOUTWATER
Boffi FANTINI

ART. B481B+M585A
Built-in shower mixer

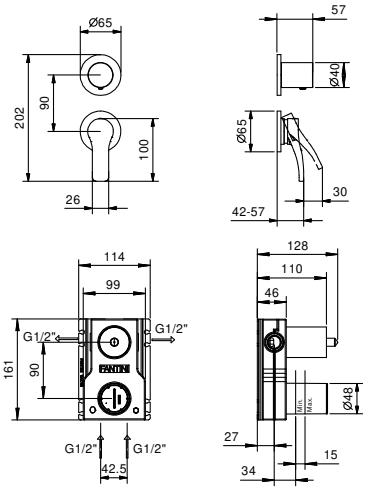

Way number 1

Pressure(bar)	Flow rate (l/min)
0.5	8.44
1	11.87
2	16.79
3	20.5
4	23.76

Way number 2

Pressure(bar)	Flow rate (l/min)
0.5	7.45
1	10.47
2	14.59
3	17.9
4	20.7