KITCHEN

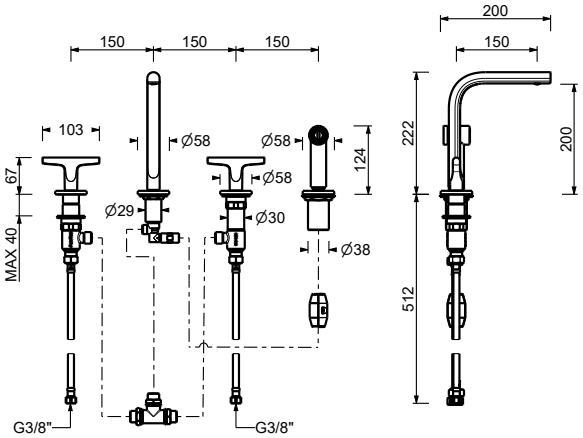

ART. J051

Sink mixer

- spout projection 15 cm
- handles
- turning spout
- detached one jet pull-out handshower with on/off push butt on
- 4-hole
- flow restrictor 8 l/min at 3 bar
- 90° ceramic cartridge
- flexible supply lines
- WITHOUT WASTE

Date

Project/Comments:

Finish:

☐ Matt Gun Metal PVD	67 P5 J051
☐ Matt British Gold PVD	67 P6 J051
☐ Deep Black PVD	67 S1 J051