VENEZIA BY VENINI

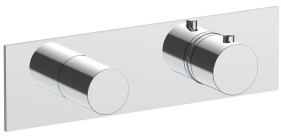



ART. G572B+D372A

3/4" built-in thermostatic shower mixer

- handles
- 2-way shut-off diverter with turning knob
- for horizontal installation only
- 3/4" inlets

Date

Project/Comments:

External piece

☐ Chrome	87 02 G572B
☐ Polished Nickel PVD	87 95 G572B
☐ Matt Gun Metal PVD	87 P5 G572B
☐ Matt British Gold PVD	87 P6 G572B
☐ Matt Copper PVD	87 P9 G572B
☐ Golden Look PVD	87 S9 G572B

Built-in piece

☐	19 00 D372A

TOTAL PRICE

☐ Chrome	87 02 G572B
☐ Polished Nickel PVD	87 95 G572B
☐ Matt Gun Metal PVD	87 P5 G572B
☐ Matt British Gold PVD	87 P6 G572B
☐ Matt Copper PVD	87 P9 G572B
☐ Golden Look PVD	87 S9 G572B

VENEZIA BY VENINI

ART. G572B+D372A

3/4" built-in thermostatic shower mixer

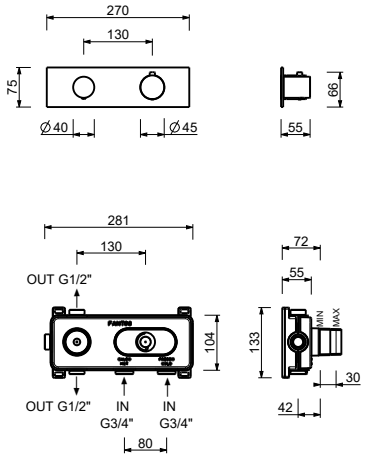

Way number 1

Pressure(bar)	Flow rate (l/min)
0.5	8.86
1	12.53
2	17.57
3	21.63
4	25.02

Way number 2

Pressure(bar)	Flow rate (l/min)
0.5	7.91
1	11.03
2	15.47
3	19.01
4	21.98