300W LED Profile IP

(WW+CW)

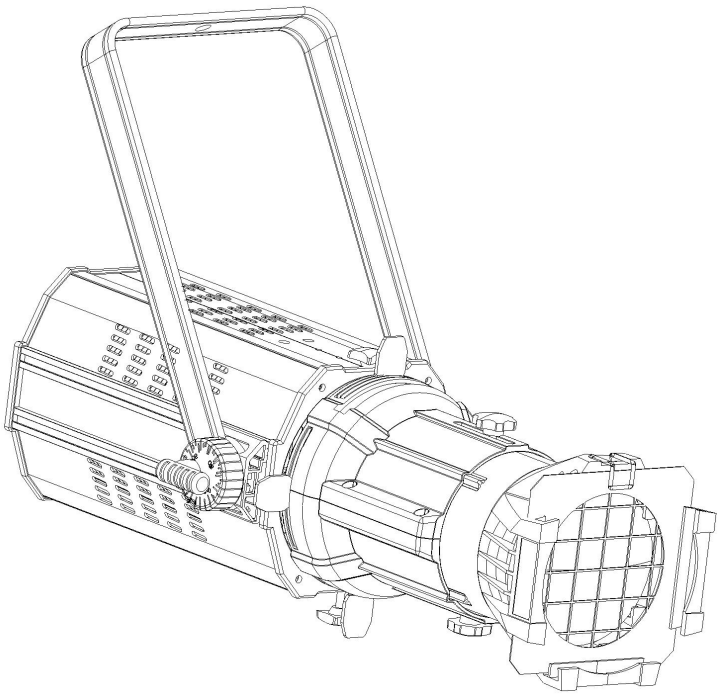

USER MANUAL

KEEP THIS USER MANUAL FOR FUTURE NEEDS

PRODUCTION INTRODUCTION

Thanks for choosing the Professional theater light. This is our latest development with up-to-date technology, advanced electronic control technology, and humanized design. It is a more high-efficient, more beautiful surface compared with its peers. It is in compliance with CE standards and DMX512 Our LED Profile Light adopts a unique lamp with focusing system, a High-quality lens, and wide input volt which generate bright and even light distribution and Excellent pictures. LED display, with the English language and easy to use

SECURITY WARNING

This item is only used in professional applications, not for others. Please check the product to see if there is damage during transportation. Please contact local agents or manufacturers for repair or replacement. IP 20, only for indoor use or outdoor use with good weather. The fixture should be kept in a dry place and forbidden use in a wet, dusty, and high-temperature environment. Fire, heat, electric shock, ultra-violet, should be noticed in operation. Please read instructions before operation and operate in accordance with operation specifications and notice the warnings. If you have any questions, please contact our agents or customer service

Careful ：

Please carefully read the safety requirements in this part before installing, energizing, operating or maintaining the lamps!

Caution!	Read the instruction	ELECTRIC SHOCK! Operate Carefully	Must wear safety glasses	Must wear protective gloves	Caution fire	Caution Hight temperature

● after receiving the lamps, please unpack and check whether there is any damage caused by transportation. In case of damage caused by transportation, please do not use this lamp and contact the dealer or manufacturer as soon as possible.

● the manufacturer will not be responsible for the loss caused by non-compliance with this manual and random change of lamps.

● please note that the lamp damage caused by changing the lamp is not covered by the warranty.

● if you have any questions or suggestions, please contact the dealer or the company in time.

● the protection grade is IP20, and this lamp can be used indoors and outdoors.

● lamps shall be kept away from high temperature, fire source, electric shock, vibration and strong light environment during use.
● only qualified professionals can install, operate and maintain lamps and lanterns, and ensure to operate in strict accordance with the procedures described in this operation manual.
● the lamp is not replaced by the user. Please do not turn on the lamp for self maintenance.

● do not look directly at the light source of the lamp (especially for patients with epilepsy) to avoid damage to the eyes!
● do not connect this lamp to any other dimming device.
● if the light source, lens, or display screen protective cover on the lamp has visible damage, that is, it is damaged to the degree of failure. In case of crack or deformation, please stop using and contact the manufacturer to replace the original accessories, otherwise it will affect the normal use.
● the installation position of lamps shall be such that they will not be stared at a distance of fewer than 4m for a long time.

● before operating the lamp, please check whether all covers (or shells) have been installed and whether the screws have been tightened reliably. Do not use lamps with the cover plate (or housing) open.
● keep the bulb clean and do not touch the bulb glass directly.
● during operation, it is recommended to wear necessary protective articles, such as goggles, gloves, etc.

●The personnel connecting the electrical part must have corresponding qualifications before operation.
● before installation, please confirm that the power supply voltage you use is consistent with the voltage marked by the lamp.
● each lamp shall be properly grounded and electrically installed in accordance with relevant standards.
● do not use the power cord with damaged insulation, and do not lap the power cord on other conductors.
● when the lamp is not in use or cleaned, please hold the power cord plug and unplug it. Do not pull the power cord or drag it directly.
● ensure that the power cord used complies with safety regulations.
● if the lamp is neither waterproof nor dustproof, please be careful to avoid short circuits caused by the lamp contacting rain or moisture during the operation of the lamp.
● do not turn on or off the lamps repeatedly in a short time, which will shorten the service life of the lamp light source or other electrical parts.

● a safety rope connecting hole is provided at the bottom of the lamp. For safety reasons, please pass the safety rope equipped with the lamp through the safety rope connecting hole for auxiliary

hoisting.

● before any installation, maintenance and cleaning of lamps, please confirm that the power supply has been cut off!

● under normal working conditions at normal temperature, the maximum temperature of the external metal surface (including the radiator surface) of the lamp will reach 170 ℃.

● there will be smoke and a peculiar smell before the first lighting. This is a normal process and does not mean that the lamp is defective.

● when in use, do not touch the metal shell with your bare hands to avoid scalding!

● please do not install lamps directly on the surface of ordinary combustible materials.

● do not project lamps directly onto combustible objects. The distance between lamps and illuminated objects shall be more than 2m.

● the lamps shall be installed in a well-ventilated place with a distance of more than 50cm from the wall. At the same time, please check whether the fan and ventilation hole is unobstructed.

● please do not expose the front glass to the sun or other strong light sources from any angle. The lens may focus the light in the lamp, resulting in potential fire hazards.

CLEANING AND MAINTENANCE

Since substances such as smoke, oil, and dust are easy to adhere to and accumulate in the lens, so as to reduce the light output, it is very necessary to keep the glass on the surface of the lamp clean in order to ensure reliable use of the lamp. It is forbidden to disassemble the lamp body unless it is confirmed by professional maintenance personnel that it is necessary to replace the internal parts of the lamp.

The cleaning times depending on the operation frequency of lamps and the surrounding service environment. When cleaning, use a soft cloth and general glass cleaning products. It is recommended to clean the external optical system at least every 20 days. Keep the lens clean and do not touch the lamp optics directly with your hands.

Special reminder:

When the sealed waterproof product is used, a slight mist will appear on the lens, which is a normal phenomenon.

● before any maintenance and cleaning of lamps, please confirm that the power supply has been cut off!

● only qualified technicians can carry out maintenance work.

● power off completely before maintenance and repair!

● in order to avoid damage to the interior of the lamp body, no matter whether the lamp is in operation or not, do not let sunlight and or other light directly irradiate the head lens.

● do not wipe the lamp shell with alcohol or other organic solvents to avoid damage.

● **do not use any solvent containing chemical components to clean the coated color filter.**

ACCESSORIES

NO.	DESCRIPTION	PICTURE	UNIT	QTY
1	Body		pc	1
2	Power Cord		pc	1
3	Signal Cords		pc	1
4	User manual		pc	1

DISPLAY DESCRIPTION

A B C D

Instructions: according to the function keys A cycle of different function, press B or C can modify the parameter values. Press the D key to confirm.

NO.	MENU	MENU FEATURES	INTRODUCTIONS
1	d001	DMX512 address code set 001	Press B/C key to adjust address code, D to save
2	L000-L255	WW brightness adjust 255	Press B/C key to adjust WW brightness, D to save
3	H000-H255	CW brightness adjust 255	Press B/C key to adjust CW brightness, D to save
4	P000-P255	Strobe speed adjust 255	Press B/C key to adjust strobe speed, D to save
5	EP-0/1	DMX signal keep EP-1 ON/EP-0 OFF	Press B/C key to select, D to save
6	DP-0/1	DP-1 Black/DP-0 ON	Press B/C key to select, D to save
7	DISP	Display reverse	Press B/C key to select, D to save
8	T00C	Current temperature	Display current working temperature

CHANNEL LIST

NO.	FUNCTION	INTRODUCTIONS
CH1	Dimmer	0-255 All dimming, linear dimming, dark to bright

CH2	Strobe	0-255 Strobe speed adjustment
CH3	WW dim	0-255 WW dimming, linear dimming, dark to bright
CH4	CW dim	0-255 CW dimming, linear dimming, dark to bright

In address code state, multi machine connection, without control table, which can realize the master-slave online features, operation of a device, the rest in address d001 state of the host device synchronized with the running program. Through to control if receives the control table, behind the podium display X become V, the address in the state of equipment can be controlled to control.

TECHNICAL PARAMETERS

Input voltage ： AC100-240V，50/60Hz
Power rating ： 300W
Light source：300Whi-lite LED
Colour temperature：3200K+5600K
CRI： ≥90
LEDs lifespan：50000h
Dimming：0%-100% linear dimming
Optical material ： K9 Optical lens
Optical Angle：5°、10°、19°、26°、36°、50° optional
Functional effect：Scattering light, zoom light, soft light
Control mode: standard DMX512 signal,auto, master-slave
Channels: 4 CH
IP rating：IP65
Framing mode：Manual framing
Occasions: professional shooting use of TV station, studio, conference room, theater, church wedding,
restaurant banquet stage performance and other occasions
Product size：68*34*23cm(L×W×H)
Net wight：13.5kg

FIXTURE SIZE

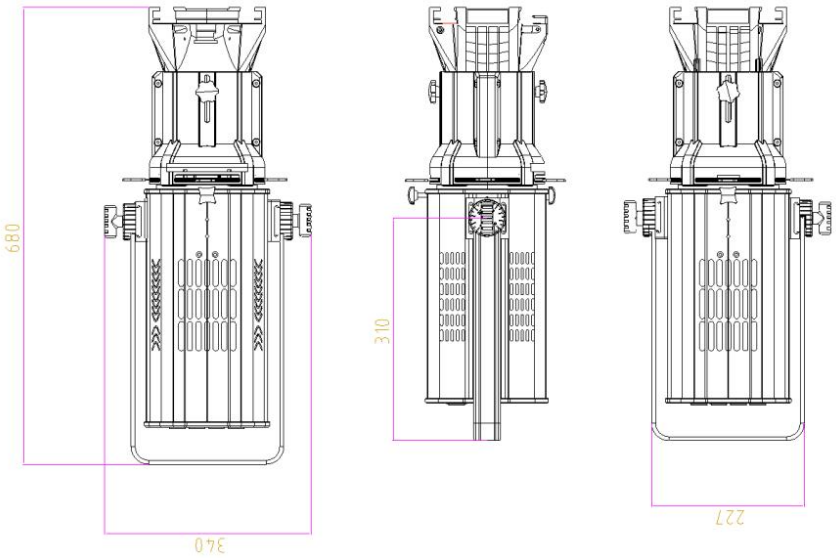

REMARK

The product has perfect performance and intergrity packing. All users should be strictly comply with the warning
and operating instructions as stated. Or we aren't in charge of any result by misusing.
Any damage resulting by misuse is not within the Company's warranty.
Any fault or problem caused by neglecting the manual is also not in the charge of dealers.
Errors and omissions for every information given in this manual excepted.
All information is subject to change without prior notice.

Thank you again for your patronage!
We will be offering sincere service as always,
Wish you have a good lighting journey!