SHIFT KIT™ SK™ 279

Although this transmission has received tons of bad publicity, we have found that it works great with some major changes in calibration.

This SHIFT KIT™ is really an almost total re-engineering of the valve body.

SURPRISINGLY: A 200 with a SHIFT KIT™ installed and the T.V. adjusted properly feels very much like a really good 400. Gas mileage and performance is much improved and durability is probably doubled.

EVERY CUSTOMER that drives in, especially those with "normal" working 200's, should be offered this kit and a service for $130-$160. The result will delight your customer by giving him a transmission that really performs well, in place of one that just gets by.

HERE IS WHY AND HOW—

3-2 CUTLOOSE (SPIN-UP) has been corrected by orificed control of hi clutch exhaust and applying the band 5 to 10 times faster. The result is much less "Dragging" and longer life for hi clutches and band. Unless the hi clutches and band are really burnt up, the installation of this kit will usually correct 3-2 spin-up complaint.

2-3 UPSHIFT—SLOW, SOFT & BIND-UP is eliminated by performing the 2-3 upshift 3 to 5 times quicker and furnishing 3½ times more oil for high gear. More than enough oil to safely cover the internal leaks that are often difficult or impossible to find and fix.

2-3 CUTLOOSE (SPIN-UP) has been corrected by orificing in such a manner that the hi clutch recieves more oil at the **beginning** of the shift and the band release more oil at the **end** of the shift.

We think you will really like this new 2-3 shift feeling. We love it, it literally "steals" high gear away from the band.

1-2 UPSHIFT is completed 2-3 times as fast without getting rough. This is done by eliminating a T.V. sensitive accumulator system and furnishing a more flexible accumulator system that uses constant rate absorption and orificing.

SUMMARY: A SHIFT KIT corrects the following common original complaints: 3-2 cutloose, soft 1-2, harsh 1-2, slow 2-3, soft 2-3, 2-3 bind-up, 2-3 spin-up, delayed reverse, 3-2 clunk, late shifts, excessive passing gear, 2nd gear starts. Increased gas mileage and durability come as a bonus.

GOVERNOR SPRING OPTION: Installing the BLACK governor spring furnished will lower passing gear 8-10 MPH. ADVICE: Reuse the original spring (yellow) under the thin weight. Then if you have a complaint of too high of passing gear, install the BLACK governor spring furnished in this kit.

GOVERNOR: Remove original spring and install small **BLACK** spring furnished to lower passing gear speed 8-10 M.P.H.

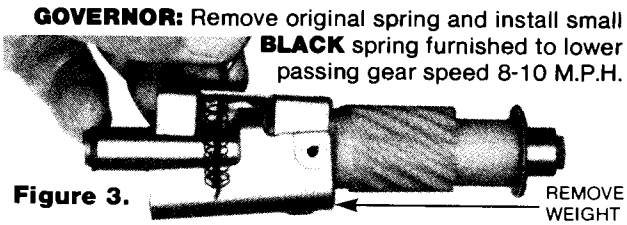

Figure 3.

Insert a cotter pin or safety wire down through hole as shown, then slide black spring over it.

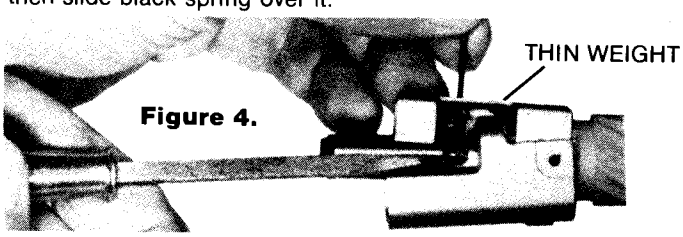

Figure 4.

Lift black spring into position with a thin bladed screwdriver.

INSTRUCTION SHEET SK279™ SHIFT KIT™ 1979 TYPE (LOCK UP AND NON LOCK UP) VALVE BODY KIT

©Copyright TRANSCO 1980 1981

279-IS-C

IDENTIFICATION: This kit fits all 1979 type THM 200's. It will not work in '76-'78 valve bodies.

THIS KIT FITS THIS TYPE VALVE BODY ONLY

Figure 1.

HOW TO IDENTIFY 1979 TYPE

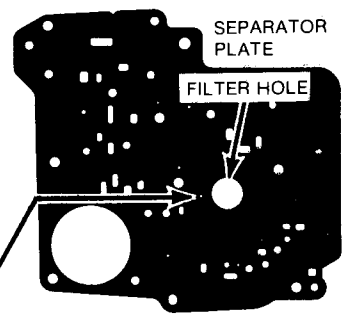

REVERSE BOOST HOLE LOCATED AT THE 9:00 O'CLOCK POSITION IN RELATION TO THE FILTER HOLE

Figure 2.

HOW TO IDENTIFY 1976-78 TYPE

THIS KIT WILL NOT FIT THIS TYPE VALVE BODY

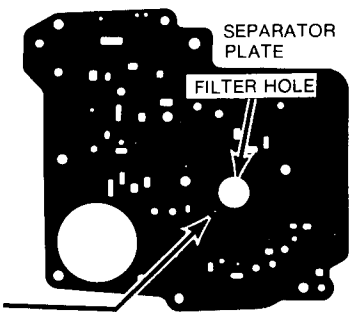

REVERSE BOOST HOLE LOCATED AT THE 7:30 O'CLOCK POSITION IN RELATION TO THE FILTER HOLE

GOVERNOR ADJUSTMENT: Insert screwdriver between the thick weight and shaft, force thick weight away from shaft until it aligns with slot in governor gauge. Align small weight also.

Figure 5.

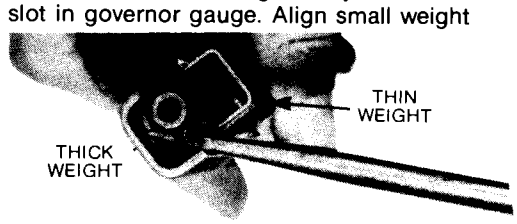

THICK WEIGHT ALIGNMENT

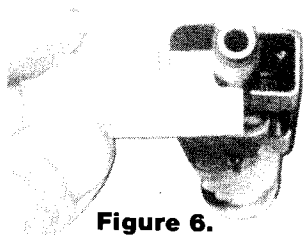

Figure 6.

THIN WEIGHT ALIGNMENT

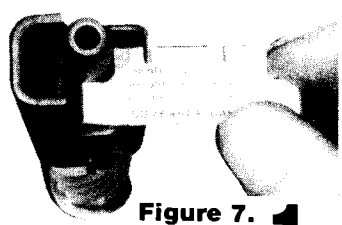

Figure 7.

VALVE BODY: Install springs furnished where shown. All other locations — reinstall original springs.

IMPORTANT: There are two bolt holes marked "A". These two holes are close fitting "Line Up Holes". Always install and tighten these two bolts first and your gaskets and separator plate will be aligned perfectly.

FIGURE 8

Figure 8.

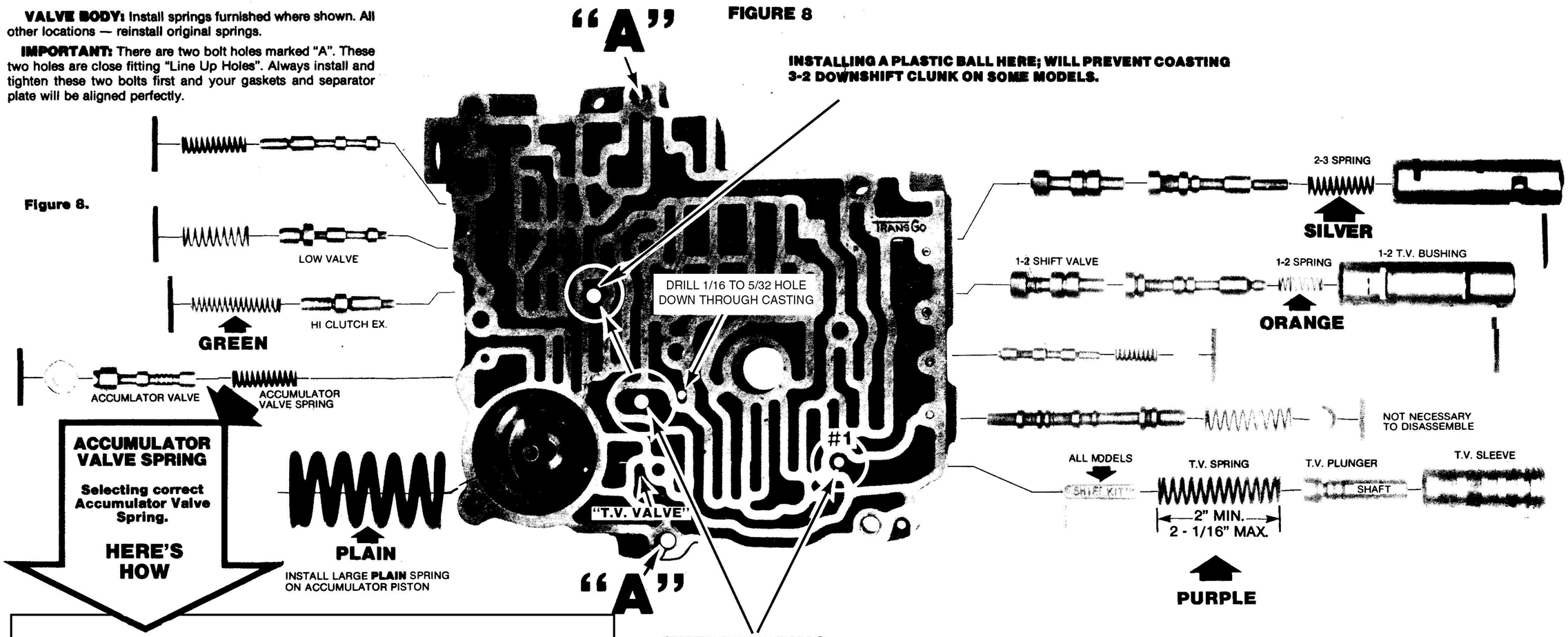

ACCUMULATOR VALVE SPRING

Selecting correct Accumulator Valve Spring.

HERE'S HOW

4 CYL: Do not install **ANY** accumulator valve spring.

Figure 9. **ALL V-8's** / **6 CYL. & V-6's** Install the color shown

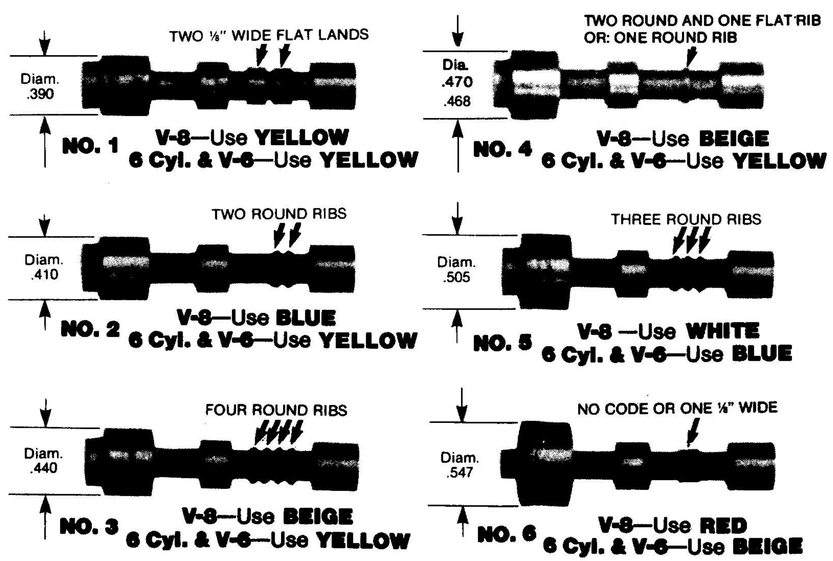

Figure 10.

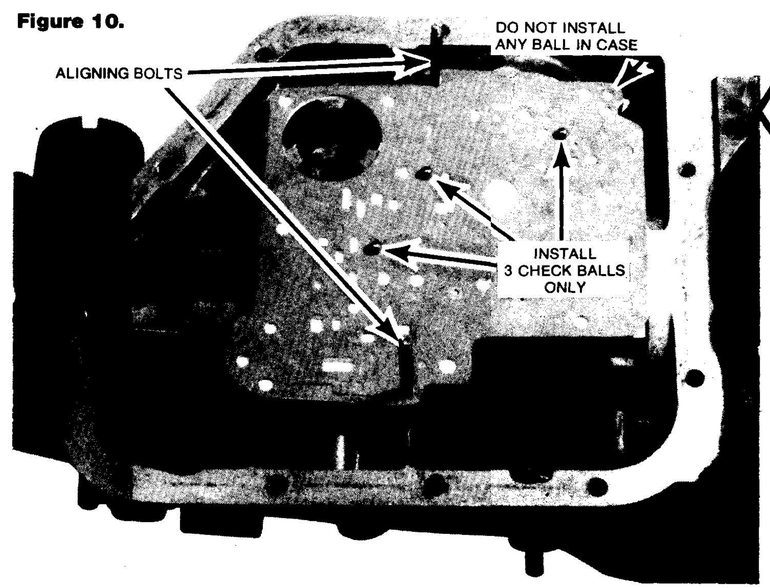

LOCATING CHECK BALLS ON SEPARATOR PLATE
Install 3 check balls as shown. Always use aligning bolts in holes shown. (Cut the heads off of two bolts.)

WARNING: Separator plate is a finished product, **Do Not** alter holes.

CROSS LEAKS AND HOW TO FIX:

Cross leaks between case and valve body are a common cause of complaints and failure in this transmission. File the case across the valve body area to at least knock down the high spots.

HIGH DRUM SURFACE: DRUM SURFACE WHERE BAND RIDES EXTREMELY IMPORTANT DURING OVERHAUL: The portion of the drum that the band rides on must be sanded. Use 100-180 grit emery cloth or sandpaper and sand around drum. Do not sand front to back. If drum is scored from metal to metal contact with band, it must be replaced.

BAND ADJUSTMENT SPACERS, CUSHION SHIM AND PISTON ORIFICE

WITH 8630569 COVER

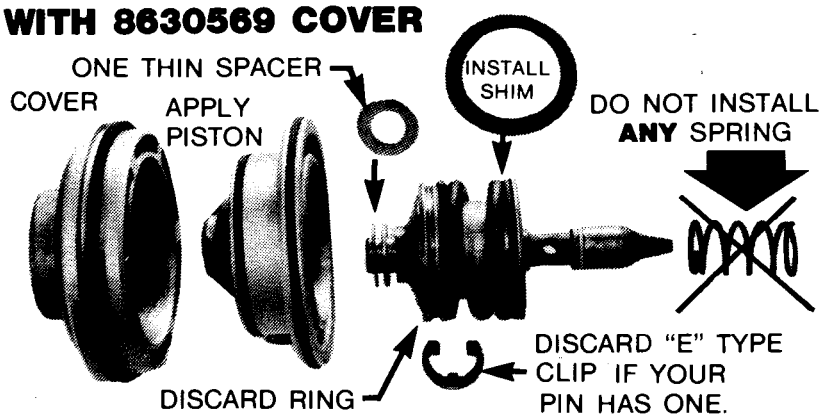

ALL OTHER COVERS

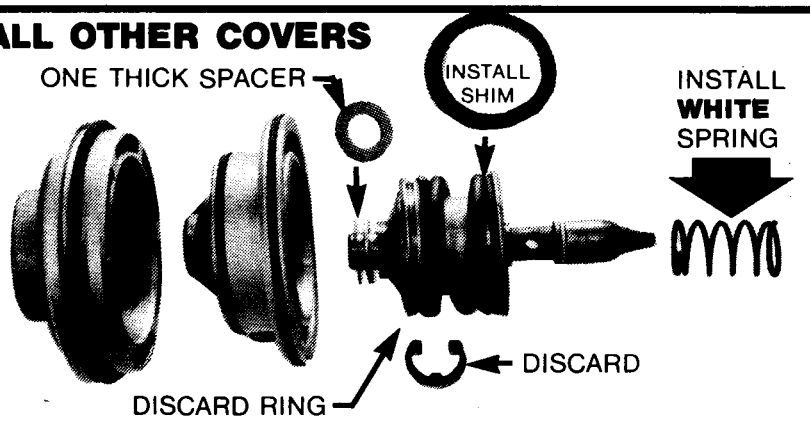

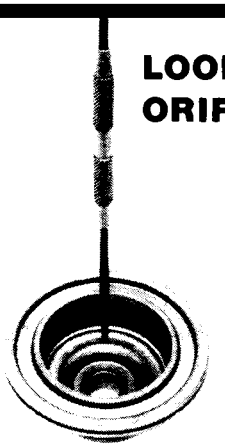

LOOK AT THE SERVO PISTON ORIFICE:

If it has a CUP PLUG in it, just leave it like it is. It's OK.

If it has a DRILLED HOLE in it — ENLARGE the hole with any drill between .154 & .161 and then INSTALL the CUP PLUG furnished.

Any of these drill sizes will work. 5/32"-#23-22-21-20 or 4mm.

INSTALL THE PISTON WITH ORIFICE PLUG TOWARDS THE TOP OF TRANS

CHECKING BAND CLEARANCE: After the servo cover is installed grab it with water pump pliers and pull it to make sure it is out against snap ring. Reach up thru the hole (on the other side of valvebody) with a screwdriver and wiggle the band front to back. It must wiggle freely. If it does not wiggle freely, remove spacer (gold washer). If it's still too tight, grind the pin shorter on the small end. If you think it's loose, add spacers until it's snug then remove spacers until it wiggles.

GASKETS, SEALS, CHECKBALLS OR TV SPRINGS ARE NOT FURNISHED AS PART OF THIS KIT. THEY MAY BE INCLUDED FROM TIME TO TIME FOR YOUR CONVENIENCE.

The parts in this kit, PLUS your carefull attention, will furnish, at the same time, the most basic requirements and the most advanced technology available.

This issue of this kit has had some improvements for correcting three complaints which are especially common on V6 models. These complaints are - and we hope were — Downshift clunk when stopping — 2-3 cutloose at around 24-32 MPH. — 2-3 upshift too firm at 36-45 MPH.

Your valve body may have a TV spring that is shorter than 2". A TV spring shorter than 2" can cause a 2-3 cutloose at 3/8 to 3/4 throttle. If your TV spring is shorter than 2", install a TV spring that is 2" long. This kit may contain a PURPLE TV spring, 2" long for your use.

If a CHECKBALL is furnished in this kit, it will be larger than the balls used in the valve body. It is a 9/32" (.281) ball. It installs in the front pump casting. It is furnished just in case you have lost the original. A ¼" checkball installed in the front pump will cause a bindup during 2-3 when cold & NO 2-3 shift when hot, or a very weak 2-3 with a cutloose.

The most common cause of clutch and band failure in this trans is a PRESSURE RISE malfunction. This means that when the driver steps on the throttle and engine torque increases, the pressure in the trans does **not** increase or does **not** increase **fast** enough to hold properly. Installing this kit corrects this.

Modern transmission do not malfunction "WHEN" the clutches and band fail: They have a SYSTEM MALFUNCTION — "THEN" the clutches and band fail.

SYSTEMS CORRECTION is the primary and essential repair for todays transmissions. The SYSTEMS CORRECTION TECHNOLOGY is what separates the shop that is FIXING them, from the shop that is working ON them. Without the technology of systems correction the repair will be UNPREDICTABLE. When it shifts, how it shifts, whether it clangs or bumps and how long it will last depends upon YOU correcting and preventing system malfunctions.

There is a lot more tech where this came - TransGo's engr and service arm is offering a HI-TECH trouble shooting and training program, for the SERIOUS minded mechanic who really wants to learn the system correction technology needed for todays more sophisticated transmission.

HI-TECH Program- Call: (626) 443-7451

T.V. ADJUSTMENT

This is the part that decides whether you've got just a good working transmission or one that really shifts right at the "RIGHT TIME."

FIRST STEP: Pull the T.V. adjustment tab "UP." A 90° scriber is the best tool to use.

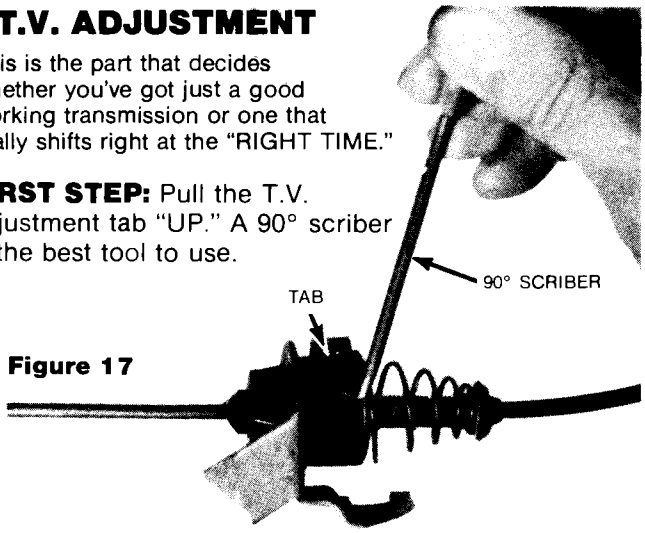

Figure 17

SECOND STEP: Now have someone floor the gas pedal FROM INSIDE THE CAR. While the pedal is floored, push the carb arm and see if it will move further. If it moves further, then adjust (Bend) cable bracket towards firewall until you are certain of wide open throttle.

Figure 18

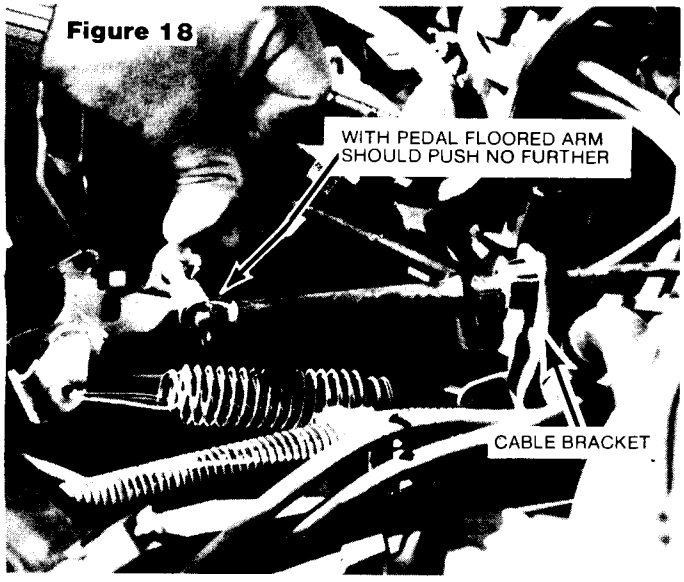

THIRD STEP: With tab up as shown in Figure 17, pull clevis forward and insert the T.V. Spacer Pin (furnished) as shown in Figure 19. Hold spacer pin in position and push throttle to wide open. Now push down T.V. adjustment locking tab. Remove T.V. Spacer Pin.

Figure 19

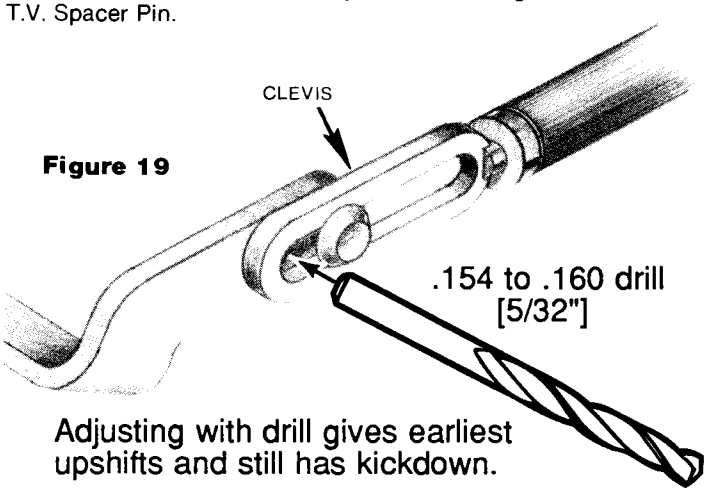

Adjusting with drill gives earliest upshifts and still has kickdown.

FOURTH STEP: Road test, checking shift timing and passing gear. If firmer or later shifts are desired adjust cable snout 1/16" closer to adjusting assembly.

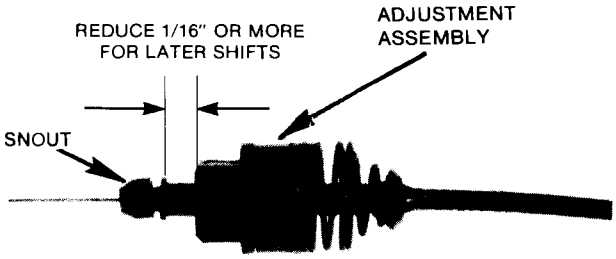

Figure 20

HI CLUTCH FAILURE: So commonly encountered in this trans, in our opinion, could be eliminated by installing this kit **before failure occurs.**

KNOWLEDGEABLE MECHANICS - have found that the shifting of the 200 trans is not very good. In our opinion a 200 needs a SHIFT KIT™ when the car is **BRAND NEW.** The biggest favor you could do for every 200 on the road is drag it into your shop and put this kit in it. The customer will be delighted to have a really good working trans and better gas mileage. You will rapidly become known as "The mechanic who can make **200's WORK RIGHT**".

Developing this kit was a couple of years of pain, agony, failures and successes. I am humbled that it took so long to "Get it all together," but we are proud that we can now join with you in offering a really good working 200 to the car owner.

Very Truly

GIL YOUNGER

ADDITIONAL REPAIR INFORMATION:

1. We know that you will encounter mismatched parts in this transmission such as wrong T.V. plunger or spring, wrong P.R. spring, wrong valve body, wrong front servo, etc. The resulting complaints are late shifts, rough 1-2, soft 1-2, etc. Experience has shown that correcting the particular complaint is a lot quicker and easier than complaining about mismatched parts and trying to make sense from a bunch of specifications and numbers.
2. Being a "Hero" does not depend on how fast you can change parts. It depends upon how often you can change or adjust the RIGHT PARTS "The First Time." This depends upon our willingness **to LISTEN to what the CAR IS SAYING instead of insisting that the car listens to what we are saying or doing.**
3. If you learn how to deal with "mismatched parts complaints," you will quickly become the "200 hero" in your territory by easily fixing the ones that have been driving everyone else up the wall.
4. Remember that the calibration causes of most common complaints have been corrected by installing a Shift Kit™. The following information is how to handle the MISMATCH COMPLAINTS that still exist AFTER the INSTALLATION of a SHIFT KIT™. In some instances these fixes would not be safe to use with original calibration, but are completely safe with SHIFT KIT™ calibration.

5. All of these FIXES are ONE THING ONLY FIXES. Everything else must be O.K. EXAMPLE: We would not do a fix for a rough 1-2 shft if we also had late shifts, or stacked shifts, or high gear starts.

RULE 1. Fix WHEN it shifts first.
RULE 2. Fix HOW it shifts ONLY AFTER the WHEN it shifts is fixed.
RULE 3. Drive it first to "qualify it" then fix it.
RULE 4. Follow CAUSE and SOLUTIONS in the order given, don't try to choose what you think it is.

6. COMPLAINT: Very late upshift or no upshifts.

QUALIFY: 1-2 above 30 MPH and hot and cold has very little effect, if any.

CAUSES: (1) GOVERNOR. (2) Checkball installed in the case. (3) T.V. Valve, Plunger Shaft and Sleeve mismatched.

1. GOVERNOR: Hold the governor horizontal with the large weight towards the ground and place the feed end in your mouth. Blow into feed end with your cheeks (not your lungs). It must be air tight. If it is air tight go to #2. If it leaks, look and see if the tab on the big weight is hitting the plastic with the big weight in the "out" position. If tab is hitting plastic before it seats the ball, bend the tab down against ball until leak is corrected. Then readjust the big weight as shown in Figure 5 and 6. This time bend it out just far enough to see the inside edge through the gauge. If it still leaks because tab hits plastic before the ball is seated, grind the plastic. If it leaks for any other reason change it. Governor must be air tight with weights in the "out" position. Road Test.

2. CHECKBALL INSTALLED IN THE CASE: If you are POSITIVE there is not a checkball in the case go to Step 3. Removing checkball: Remove pan and filter. Loosen valve body bolts enough to lower valve body and plate and remove ball located over T.V. bellcrank assembly. If there was no checkball in the case, see Step 3.

3.T.V. PLUNGER SHAFT AND SLEEVE MISMATCHED WITH T.V. VALVE:

If T.V. Plunger Shaft and Sleeve is too **SMALL,** you will have erratic very late upshifts or no upshift.

If T.V. Plunger Shaft and Sleeve is too **LARGE**, the throttle will be hard to push.

The Shaft on the T.V. Plunger comes in 3 different sizes (diameters) to match 3 different T.V. Valve sizes.

The code on the T.V. Valve, in the valve body, will tell you what size T.V. Plunger and Sleeve must be used. Follow the arrow from **"T.V. VALVE"** in FIGURE 8 (page 2-3) and look at the spool part of the valve as you move the valve back and forth slowly.

CODE ON T.V. VALVE

1 Machined Rib = Use .430 Dia. Plunger and Sleeve
2 Machined Ribs = Use .390 Dia. Plunger and Sleeve
No Machined Rib = Use .357 Dia. Plunger and Sleeve

Figure 21

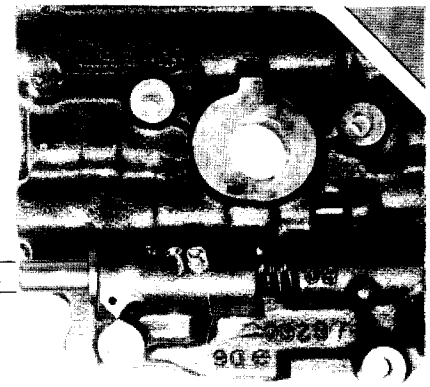

7. COMPLAINT: Very quick shifts (too early).

QUALIFY: Adjusting T.V. has no effect.

1. T.V. cable disconnected: Have someone push gas pedal to see if T.V. plunger is moving with pan off. Connect as necessary.

2. Remove valve body: Check gaskets and checkball location. The gasket next to the valve body must have "VB" cut through it above the manual valve. The gasket between the case and separator plate must have an "O" or "C" cut through it along the back edge about 2" in from the manual valve side. If #1 checkball is out of position or missing, there is no T.V. See Figure 8.

8. COMPLAINT: No detent when T.V. is adjusted for proper shift points at light and medium throttle.

QUALIFY: When T.V. is set so that detent is available, the light and medium throttle shifts are late.

CAUSE: (1) Carb not getting wide open. (2) T.V. Spring is too long.

1. Have someone floor the gas while you check for W.O.T. as shown in Figure 18.

2. T.V. SPRING TOO LONG: Remove pan-T.V. bellcrank assembly, roll pin, T.V. plunger and sleeve, T.V. spring and detent spacer. Grind on end of the spring until spring is 2" long (+1/16"). Reassemble. Don't forget to reset T.V. because shifts could now be early or soft unless you adjust T.V.

9. COMPLAINT: ROUGH 1-2 shift at most throttle openings but mooth under the very lightest throttle.

QUALIFY: Shift to high is at right speed and O.K.

1. Remove pan; see if you drilled the hole in valve body.

2. If hole is drilled, removing the accumulator valve spring will soften the 1-2 shift. HERE'S HOW—with needle nose pliers remove the accumulator valve roll pin. Remove the plug, valve and spring. Discard spring and reassemble. Open up one end of the roll pin slightly and reinstall it from the bottom.

3. If still rough, install smaller servo assembly. 1976-78 servo assemblies work just fine on all year models with Shift Kit ™

10. COMPLAINT: Soft 1-2 all throttle openings or slide bump on hard throttle.

QUALIFY: More throttle makes it worse.

Install higher number accumlator valve spring (2 steps higher) and road test. If not fixed install larger servo. 1976-78 servo's can be used in '79 and later models with Shift Kit™

11. COMPLAINT: Late 1-2 shift or stacked shifts (common in diesels and Chevrolet Nova).

QUALIFY: All other shifts O.K. and 1-2 T.V. bushing has #8 stamped on the end.

SOLUTION: Install #6 or #5 1-2 T.V. bushing and valve using SHIFT KIT ™ spring.

WE CARE ABOUT YOU: If you are still having a problem when you've got this trans back together, our TECHNICAL DEPT will be happy to help. Phone (626) 443-7451.

Have a Nice Day! ®