Code
3561
Models
VALLOX 121 MC R
VALLOX 121 MC L

Vallox 121 MC

Low-energy ventilation unit with heat recovery

Operating, maintenance and technical instructions

© Vallox
1.09.420 EN
14.5.2013

1 Extract air fan
2 Supply air fan
3 Post-heating radiator (electric 900 W)
4 Heat recovery cell
5 Outdoor air filter F7
6 Outdoor air filter G4
7 Extract air filter G4
8 Automatic summer/winter damper
9 Safety switch
10 Measurement outlets (behind an opening door)
11 Adjustment of the relationship between supply and extract air
12 Adjustment of post-heating
13 Speed selector switch (1–4, option)

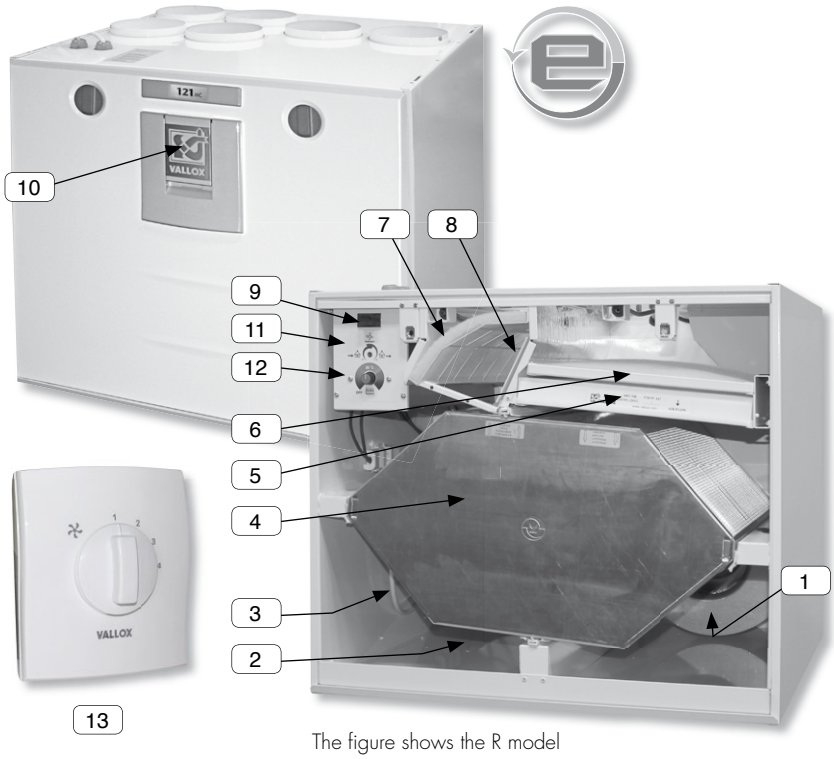

The figure shows the R model

TECHNICAL DATA

Electrical connection		230V 50Hz = 5.7A
Degree of protection provided by enclosures		IP 34
Fans direct current (DC)	Extract air	0.119 kW 0.9A 105 dm³/s 50Pa
	Supply air	0.119 kW 0.9A 101 dm³/s 50Pa
Heat recovery		Cross-counter flow heat recovery cell, η >80%
Heat recovery bypass		Automatic
Electric post-heating unit		900 W, 3.9 A
Fans	Supply air	G4 and F7
	Extract air	G4
Weight		60 kg
Ventilation control		Simple Control controller (option)
		PTXPA Slim-Line SC cooker hood (option)
		Fireplace switch (option)



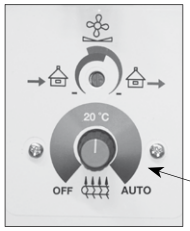

Adjustment of supply air temperature



Fireplace switch, flush mounting (option)

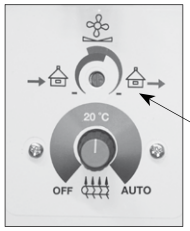

Supply and extract air flow adjustment potentiometer

This appliance can be used by children aged from 8 years and above and persons with reduced physical, sensory or mental capabilities or lack of experience and knowledge if they have been given supervision or instruction concerning use of the appliance in a safe way and understand the hazards involved.

Children shall not play with the appliance.

Cleaning and user maintenance shall not be made by children without supervision.

Fan speed adjustment

The fan speed of Vallox ventilation unit can be controlled with a control switch (option), with a separate cooker hood (option) or directly with a 0-10 V voltage signal.

Speeds 1, 2, 3 and 4 can be selected at the control switch:

1. Operation during absence. When the dwelling is empty, ventilation can be reduced temporarily.

2–3. Normal operation. In normal operation, air has to be replaced once every two hours.

4. Boosted operation. Cooking, taking a sauna bath, washing, drying clothes, using the toilet, having guests or a corresponding situation may cause a need for higher ventilation than in normal operation.



Four-step control switch (option)



Cooker hood PTXPA-SC (option)

Adjustment of supply air temperature and summer/winter function

The temperature of air coming to the dwelling can be adjusted between circa +10 °C and +30 °C. The midpoint of the adjustment range is circa +20 °C. When supply air temperature adjustment has been turned in the OFF position, post-heating is not active. This means that summer function is activated for the ventilation unit. The unit has a motorised summer/winter function. When the summer function is on, the heat recovery cell is bypassed as soon as outdoor air temperature has risen above +14 °C. When outdoor air temperature goes below +12 °C, the unit starts to recover heat. When supply air temperature adjustment is in the AUTO position, automatic function is activated for the unit. In this case, the setpoint for post-heating is +17 °C and the heat recovery cell is bypassed automatically according to outdoor temperatures as indicated above. When the unit bypasses the heat recovery cell, in which case summer function is activated, post-heating is off.

Fireplace switch function

It is possible to connect a timer-operated switch to the unit. The switch stops the extract air fan during the time when the fireplace is heated. NOTE! The starting of the extract air fan may weaken draught in the fireplace! In winter, this situation may disturb the winter function of the unit. The situation will normalise in a while, after the fireplace function stops.

Winter function of ventilation unit

A threshold value has been set at the factory for the freezing of the heat recovery cell. When the threshold is exceeded, the ventilation unit starts to melt the heat recovery cell. Melting is done by stopping the supply air fan.

A normal melting period takes from 15 to 45 minutes depending on the extent of ice on the heat recovery cell and on the amount of extract air flow.

The unit has two different choices for the winter function. One choice is meant for very wet conditions (for instance swimming hall) and the other for normal operation in dwellings and detached houses.

The factory setting is normal winter function for dwellings and detached houses.

Adjustment of the relationship between supply and extract air

This feature may be useful when adjusting air flows at the valves during mounting. After the valves have been adjusted, a user does not need, and must not, touch the adjustment. When needed, supply or extract air flow can be reduced at the potentiometer. When the potentiometer is approximately halfway, supply and extract air flow have not been reduced. Turning the potentiometer anticlockwise reduces the air flow on the supply side, and turning it clockwise reduces the air flow on the extract side.

Maintenance reminder

The unit reminds of the need for maintenance every six months if an indicator (not standard) has been connected to the connectors of the fault signal relay. The indicator then blinks at one-second intervals. The maintenance reminder is reset when the door of the ventilation unit is opened. See the maintenance instructions for information on the necessary maintenance activities.

© VALLOX • We reserve the right to make changes without prior notice.
What the units include can vary depending on the sales area.

Troubleshooting

When a fault described in the table appears, the unit indicates of the fault with a fault signal relay, indicator light and LED on the circuit board. The number of blinks reveals the fault in question

Led blinks	Problem	Repair
1	Supply air sensor after the HR cell is faulty	Check the sensor and conductors, replace if needed
2	Extract air sensor is faulty	Check the sensor and conductors, replace if needed
3	Supply air sensor is faulty	Check the sensor and conductors, replace if needed
4	Exhaust air sensor is faulty	Check the sensor and conductors, replace if needed
5	Outdoor air sensor is faulty	Check the sensor and conductors, replace if needed
6	Supply air fan has stopped	Check the wiring of the fan, replace the fan if needed
7	Extract air fan has stopped	Check the wiring of the fan, replace the fan if needed
8	EEPROM faulty	Replace the circuit board of the unit with a new one

MAINTENANCE

Before starting maintenance operations

Disconnect the plug of the VALLOX 121 MC unit before starting maintenance operations.
When you open the VALLOX 121 MC unit, the security switch (S) turns voltage off. In spite of this, disconnect the plug of the unit.

Filters

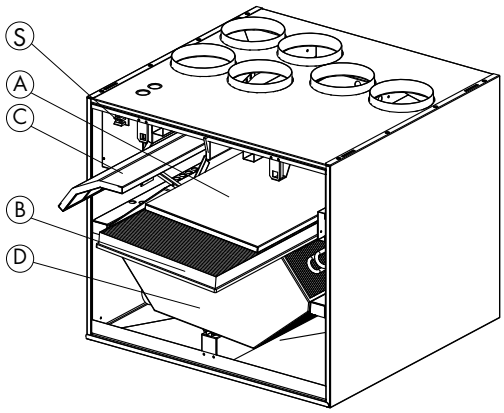

When the maintenance reminder gives an alarm, the cleanliness of the fans must be checked. Outdoor air is filtered in the unit with two kinds of filters. A coarse filter (A) filters off insects, heavy pollen and other dust. An F7 class fine filter (B) filters off fine dust invisible to the eye. Extract air is filtered with a coarse filter (C).

By using original Vallox filters you ensure good operation of the ventilation unit and the best filtering result. The replacement interval of filters depends on dust content in ambient air. It is recommended to replace fans in spring and autumn, but at least once a year.

Heat recovery cell

Check the cleanliness of the heat recovery cell D at one-year intervals. NOTE! The laminas of the cell are very thin and get easily damaged. The correct way of removing the cell is to put your hands behind the cell and slowly pull it off. If the cell is dirty, soak it in a solution of water and washing-up liquid. Rinse the cell clean with a jet of water. When all the water has drained from between the laminas, the cell can be remounted to the unit. Before mounting check the seals. Check that the seal does not start "rolling" with the cell when you push the cell in place.

Fans

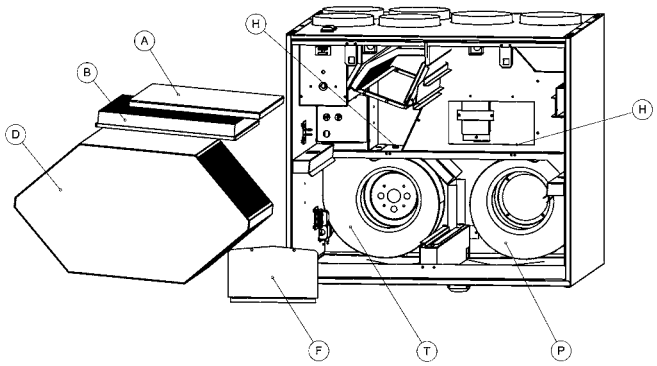

Check the cleanliness of the fans when carrying out maintenance for a filter and the heat recovery cell. Clean the fans if needed. The fans can be removed from the unit for cleaning. The fan blades can be cleaned with compressed air or with a brush. Do not remove or move the balancing pieces on the fan blade.

Removing supply fan (T)

Before removing the supply fan, remove the HR cell (D) by pulling carefully. Place a thin sheet board or paper under the fan in order to prevent the bottom tank from being scratched when removing the fan. Unfasten the fixing screw of the fan (H, hex socket-head cap screw AV 4 mm) and place the fan on the bottom tank. Rotate the fan (model R anticlockwise, model L clockwise) and slide the fan along the bottom tank. Unfasten the quick couplings of the fan wires and lift the fan off. Check that the collar rubber is in place before mounting the fan back in place.

Removing extract air fan (P)

Before removing the extract air fan take out the coarse filter (C), fine filter (B) and HR cell (D) by carefully pulling them and remove the maintenance door (F), fixed with two screws. Place a thin sheet board or paper under the fan in order to prevent the bottom tank from being scratched when removing the fan. Unfasten the fixing screw of the fan (H, hex socket-head cap screw AV 4 mm) and place the fan on the bottom tank. Rotate the fan (model R clockwise, model L anticlockwise) and slide the fan along the bottom tank. Unfasten the quick couplings of the fan wires and lift the fan off. Check that the collar rubber is in place before mounting the fan back in place.

© VALLOX • We reserve the right to make changes without prior notice.
What the units include can vary depending on the sales area.

Condensing water outlet

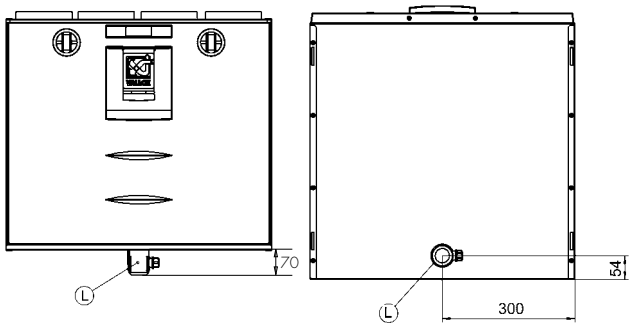

During the heating season, humidity of extract air condenses into condensing water. Water formation can be abundant in new buildings or if ventilation is low compared to the humidity build-up caused by the residents. Condensing water needs to flow out from the ventilation unit without hindrance. In carrying out maintenance, for instance in autumn before the beginning of the heating season, make sure that the condensing water outlet (L) in the bottom tank is not clogged. You can check it by pouring a little water in the tank. Clean if needed. Do not let water flow into electrical devices.

Replacing post-heating radiator

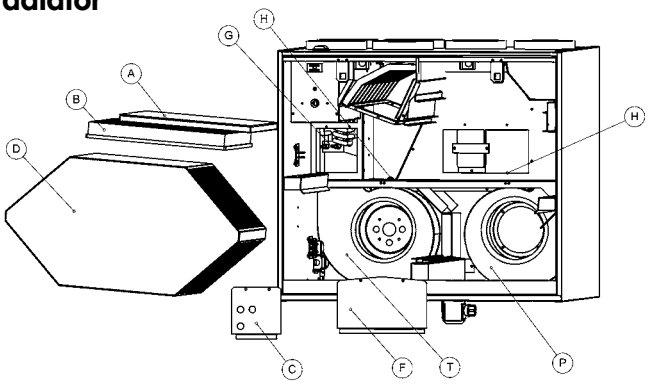

First remove the HR cell (D) from the unit by pulling it carefully. Remove the NTC sensor from the cover lid (C) by pulling. Open the fastening screws of the cover lid (C) and remove the lid. Open the fastening screw (G) of the post-heating radiator, lift the post-heating radiator out of its holder and take it out through the cover lid. Assembling takes place in the opposite order.

© VALLOX • We reserve the right to make changes without prior notice.
What the units include can vary depending on the sales area.

TECHNICAL DATA

Dimensions and duct outlets

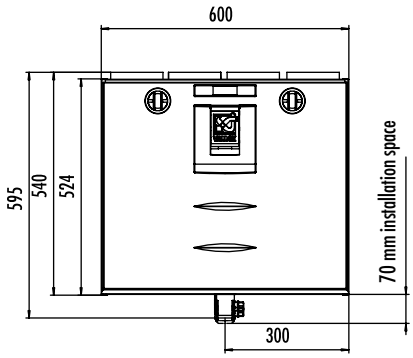

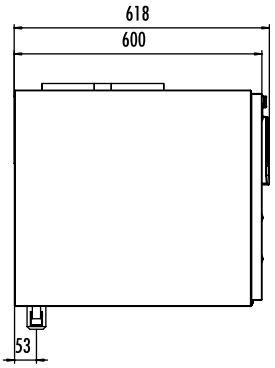

Model: R

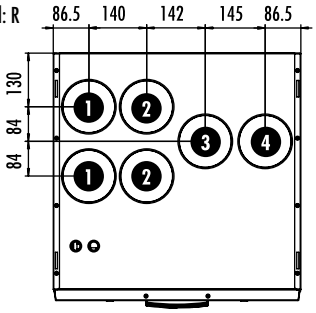

Model: L

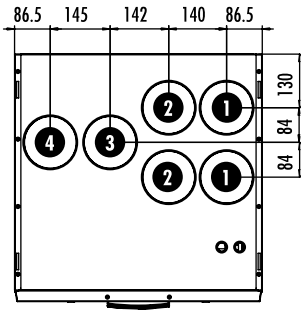

Duct outlets

Inner diameter of female outlet collar

1. Supply air to the dwelling
2. Extract air from the dwelling to the unit
3. Outdoor air to the unit
4. Exhaust air out

Measuring points

Measuring points after the connection outlet.

Fan curves indicate the total pressure available for duct losses.

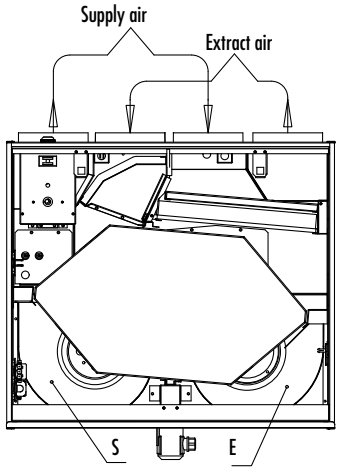

The figure shows the R model

Input powers of fans

Fan control voltage (V)	Extract air flow (l/s)	Combined input power of fans W
4	25	18
5	36	27
6	45	37
7	56	56
8	70	81
9	83	116
10	93	159
11.2	104	215

Supply/extract air flows

P = Extract air fan
T = Supply air fan

$$SFP = \frac{\text{Input power (total) (W)}}{\text{Air flow (max) (dm}^3\text{/s)}}$$

SFP (Specific Fan Power) recommended value <2.5 (kW m³/s)
At a lower total pressure, SFP will be smaller at the same speed

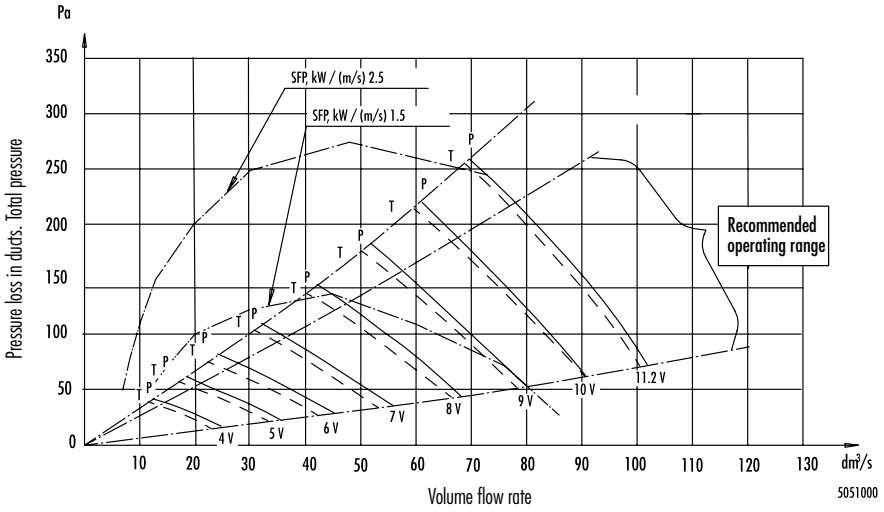

Sound values

		Sound power level in supply air duct (one duct) by octave band L_W, dB								Sound power level in extract air duct (one duct) by octave band L_W, dB							
		ADJUSTMENT POSITION/AIR FLOW dm³/s								ADJUSTMENT POSITION/AIR FLOW dm³/s							
Adjustment position		4.0	5.0	6.0	7.0	8.0	9.0	10.0	11.2	4.0	5.0	6.0	7.0	8.0	9.0	10.0	11.2
Air flow dm³/s		17.2	29.4	39.8	51.1	65.6	73.1	78.9	91.6	25.2	35.5	44.9	56.3	61.9	75.6	82.6	94.5
Medium frequency of the octave band Hz	63	63	72	73	77	80	83	84	87	51	54	57	60	64	64	68	71
	125	53	59	63	66	69	73	75	79	44	48	51	55	59	62	64	67
	250	45	50	53	57	62	65	68	70	38	41	43	49	53	56	58	60
	500	40	45	47	51	55	58	61	63	26	32	34	38	42	45	48	50
	1000	39	46	49	54	57	59	60	62	22	27	30	34	37	39	42	43
	2000	32	40	45	51	55	58	61	64	*	18	22	27	31	34	36	39
	4000	18	29	35	41	46	50	52	55	*	*	*	14	19	24	27	29
	8000	*	*	22	31	38	42	45	49	*	*	*	*	*	*	*	*
L_W dB		63	72	73	78	80	83	85	88	52	55	58	61	65	67	70	73
L_{WA} dB(A)		44	51	55	59	63	65	68	70	32	36	39	44	47	50	53	55

	Sound pressure level coming from the unit through the envelope in the rooms where the unit has been installed (10m² sound absorption)							
	ADJUSTMENT POSITION/AIR FLOW dm³/s							
	4.0	5.0	6.0	7.0	8.0	9.0	10.0	11.2
	24/26	33/34	40/42	50/51	62/62	71/71	82/82	92/92
L_{pA} dB (A)	26	30	32	35	40	42	45	47

Vallox 121 MC

© VALLOX • We reserve the right to make changes without prior notice.
What the units include can vary depending on the sales area.

Electrical diagram

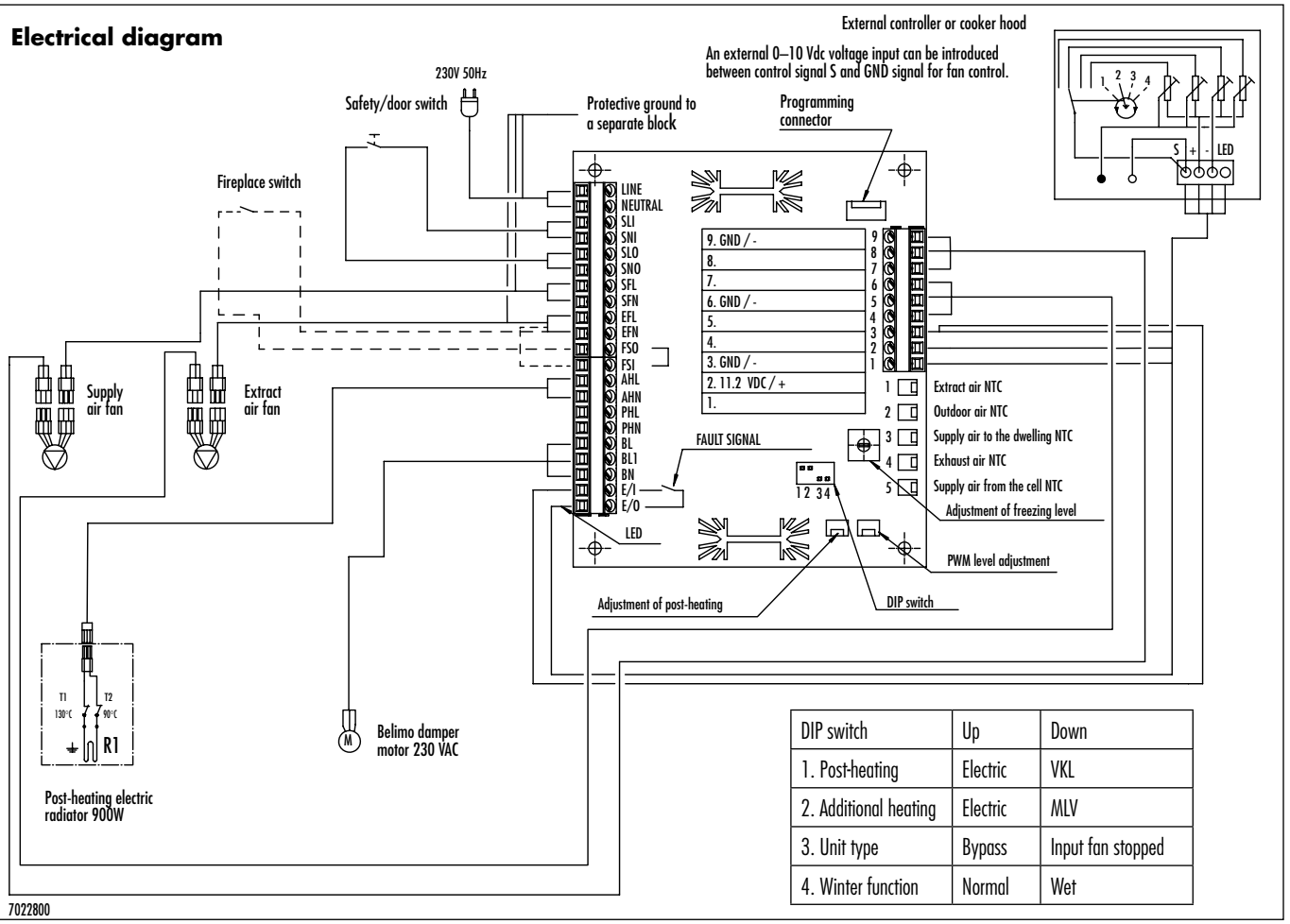

DIP switch	Up	Down
1. Post-heating	Electric	VKL
2. Additional heating	Electric	MLV
3. Unit type	Bypass	Input fan stopped
4. Winter function	Normal	Wet

7022800

LINE:	Phase voltage
NEUTRAL:	Zero voltage
SLI:	Phase voltage to safety switch
SNI:	Zero voltage to safety switch
SLO:	Phase voltage to circuit board from safety switch
SNO:	Zero voltage to circuit board from safety switch
SNO:	Phase voltage to supply air fan
SFN:	Zero voltage to supply air fan
EFL:	Phase voltage to extract air fan
EFN:	Zero voltage to extract air fan
FSO:	Input to fireplace switch
FSI:	Fireplace switch output
AHL:	Phase voltage to post-heating
AHN:	Zero voltage to post-heating
PHL:	Phase voltage to additional heater
PHN:	Zero voltage to additional heater
BL:	Damper motor phase A
BL1:	Damper motor phase B
BN	Zero voltage to damper motor
E/I:	Input voltage to fault signal relay
E/O:	Fault signal relay output

© VALLOX • We reserve the right to make changes without prior notice.
What the units include can vary depending on the sales area.

Mounting

VALLOX 121 MC is mounted on the wall with a mounting plate as shown in the adjacent figure.

Wall mounting

Mount VALLOX 121 MC in a place where temperature does not go below +10 °C. Without protective enclosure, the unit must be located in a place with no acoustic disturbance, such as storerooms or technical rooms. VALLOX 121 MC can also be located in a damp room, but not in a bathroom next to a sauna bath.

Wall construction

The weight of the unit (60 kg) has to be taken into account when mounting the wall bracket on the wall structure. Avoid mounting the unit on a hollow, echoing dividing wall and on a bedroom wall because of sound conduction, or prevent sound conduction.

Electrical connections

The unit has a plug connection. The connection box of the unit is located loosely upon the unit and can be moved to another place as desired.

Duct connections of unit

The unit is equipped with six Ø 125-mm collars. Necessary connecting pieces (such as inner or bent connector) can be attached to the collar. NOTE! The connecting head of the connecting piece must not be inserted into the collar by more than 30 mm. Fix the ducts steadily and tightly to the relevant outlets. (Note! Unit models L/R). Implement duct insulation if needed as defined in the ventilation plan.

Air flow measurement outlets

The fixed air flow measurement outlets of the unit are located in the door below the latch. You can measure the total pressure of the supply and extract air ductwork at the measurement outlets, using a differential pressure instrument. Pressure readings and air volume tables (see Page 5) show volume flow rates at various adjustment positions. The red measurement hoses are intended for measuring the supply air ductwork and the black measurement hoses for measuring the extract air ductwork.

Condensing water connections

The delivery includes a Silent Kick water seal. By connecting a pipe to the water seal the water condensing from extract air can be led to a floor drain (not directly to the drain). Silent Klick water seal prevents the sound caused by water as the water seal dries up. The pipe must not rise after the water seal. The condensation water discharge outlet is located at the rear edge in the middle of the unit. Because of this the unit has to be mounted horizontally level.

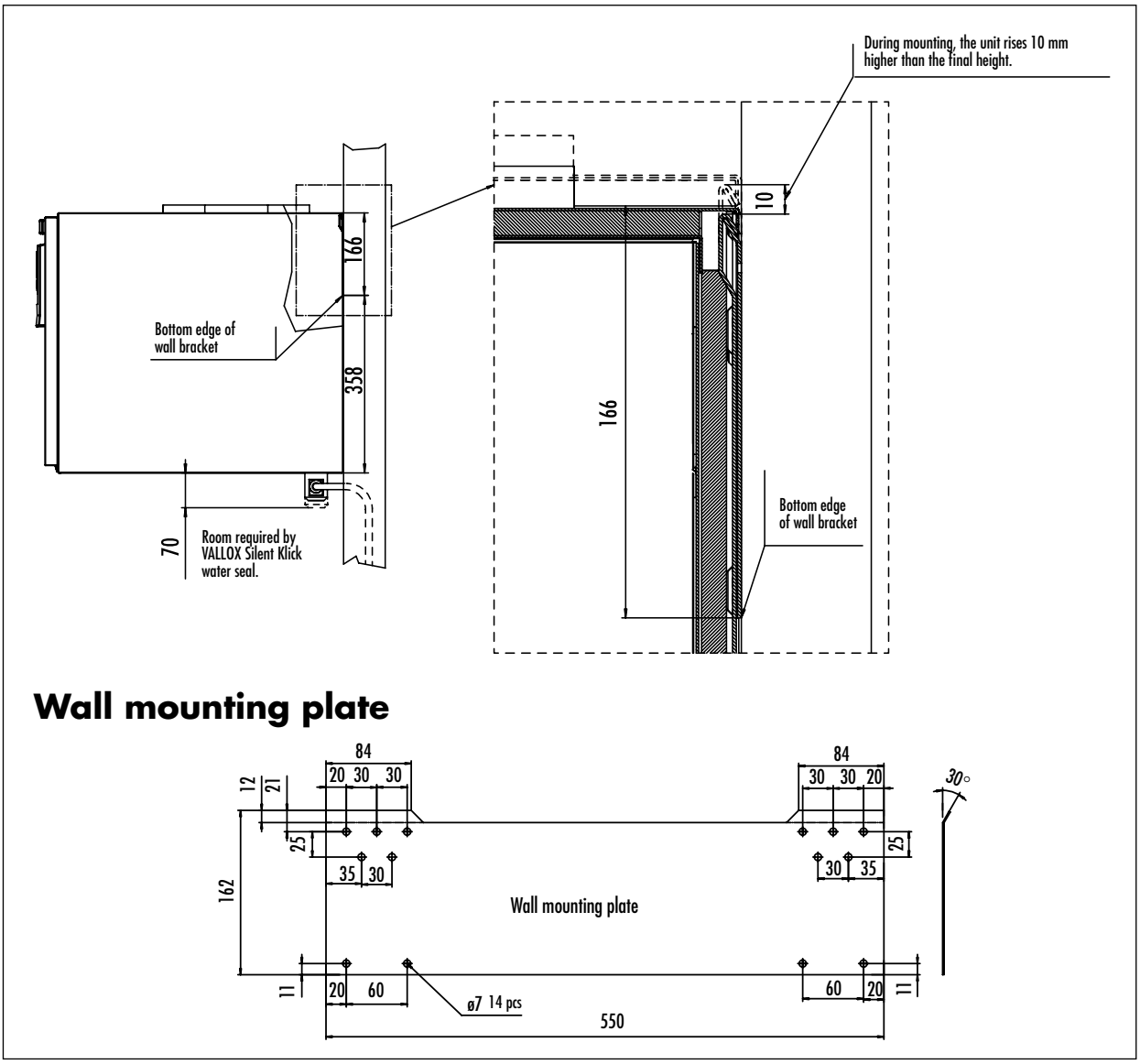

Wall mounting plate

© VALLOX • We reserve the right to make changes without prior notice.
What the units include can vary depending on the sales area.

VALLOX

www.vallox.com

1.09.420F/14.5.2013/PDF

© VALLOX • We reserve the right to make changes without prior notice.
What the units include can vary depending on the sales area.