WITTENSTEIN | alpha

alpha Advanced Line
Product catalog

Powerful
Compact
Precise

WITTENSTEIN | alpha

alpha Advanced Line
Product catalog

Powerful
Compact
Precise

© 2018 by WITTENSTEIN alpha GmbH

All technical specifications were correct at the time of going to print. We are continually developing our products and therefore reserve the right to make modifications. This documentation is subject to occasional errors. Please appreciate that legal claims cannot be asserted as a result of incorrect specifications, illustrations or descriptions. The text, photos, technical drawings and any other illustrations printed in this publication are protected property of WITTENSTEIN alpha GmbH.

Further use of this material in printed or electronic format requires express approval from WITTENSTEIN alpha GmbH.

Any form of duplication, translation, editing, transfer to microfilm or storage on electronic systems is not permitted without express permission from WITTENSTEIN alpha GmbH.

Contents

Foreword by company management 06

WITTENSTEIN alpha 08

More than 30 years of innovation

Engineering Tools 12

alpha Advanced Line 16

Product range and applications

Planetary gearboxes 22

SP+ / SP+ HIGH SPEED 24
TP+ / TP+ HIGH TORQUE 78

Hypoid gearboxes 124

HG+ 126
SK+ / SPK+ 138
TK+ / TPK+ / TPK+ HIGH TORQUE 176

Bevel gearboxes 224

SC+ / SPC+ / TPC+ 226

Worm gearboxes 258

VH+ / VS+ / VT+ 260

Application-specific solutions 288

DP+ 290
HDP+ 306

Product portfolio & company 314

Gearbox overview 314
Advanced Linear Systems 320
premo actuators 322
Accessories 324
Mounting ring 326
Services 328
WITTENSTEIN group 334

Information 336

Gearboxes general - Detailed sizing 336
Hypoid gearboxes - Detailed sizing 340
Worm gearboxes - Detailed sizing 342
Glossary 344
Order codes 350

Dear Business Associates,

Even though we are extremely passionate about technology and innovation, the success of our customers is our top priority. We have designed our products and services to help you achieve a competitive advantage – through consistently high quality, permanent availability and the best service worldwide.

Our range of products is forever expanding and so we have restructured our product portfolio to make it ever easier to find the right product for each specific application in the future. The alpha Premium Line offers unique, individual solutions. Our alpha Advanced Line provides maximum power density, compact precision and outstanding positioning accuracy. Customers searching for a reliable, cost-effective product should consider the alpha Value & Basic Line of robust precision gearboxes.

You are sure to find the right solution quickly and easily from our product range. We offer holistic mechanical and mechatronic drive solutions for all types of axis. We also provide complete solutions from a single source on request. Our range of products and solutions will continue to grow in the future because we never stop developing new ideas to make your work easier.

Take our word for it!

Philipp Guth
Managing Director WITTENSTEIN alpha GmbH

YOUR WORLD IS OUR DRIVE.

FOR MORE THAN 30 YEARS.

SP

LP

Linear systems

TPM+

High Performance Linear System

1983 | 1994 | 1996 | 1999 | 2002 | 2004 | 2006 | 2007 | 2011 | 2013

TP

cymex®
sizing software

XP+ / TP+ / SP+ / LP+

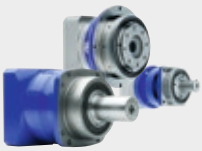

TPK+ / SPK+ /
HG+ / SK+ / TK+

HDV
Hygiene Design

PERFORMANCE

Performance where it counts:
High torque, outstanding precision and high power density – essential for our products and systems.

FUTURE PROOF

We live processes:
Only those who know the exact details of customer processes and requirements are in a position to develop solutions that offer added value in the short and long term.

SCALABILITY

You never make compromises:
Whatever the performance area – we offer solutions that grow with your requirements.

WITTENSTEIN | alpha

It is good to know today what will be needed tomorrow. Applying it in practice is even better. We develop technology that shapes the future – ENGINEERING FUTURE SOLUTIONS.

EFFICIENCY

We like it „lean“:
We offer products and systems that are energy-efficient and require minimal installation space in machines.

AVAILABILITY

You need reliability:
We have the widest range of products on the market and can implement your application „just in time“.

CONNECTIVITY

We think in terms of interfaces:
All of our systems can be integrated in a wide range of peripherals.

alpha Value Line

DP+ for Delta robots

INIRA

alpha Linear Systems

alpha Basic Line

2015 | 2016 | 2017 | 2018

cymex® 5

SIZING ASSISTANT

V-Drive Family

premo

WITTENSTEIN alpha on all axes

Complete drive solutions under one roof

We offer the best solutions for almost every application. In addition to gearboxes, our product portfolio includes a wide range of drive solutions with linear systems and actuators. Adapted accessories such as couplings and shrink disks round off the product portfolio.

The diagrams below provide a quick overview of our product portfolio for a wide variety of requirements and applications:

Planetary gearboxes

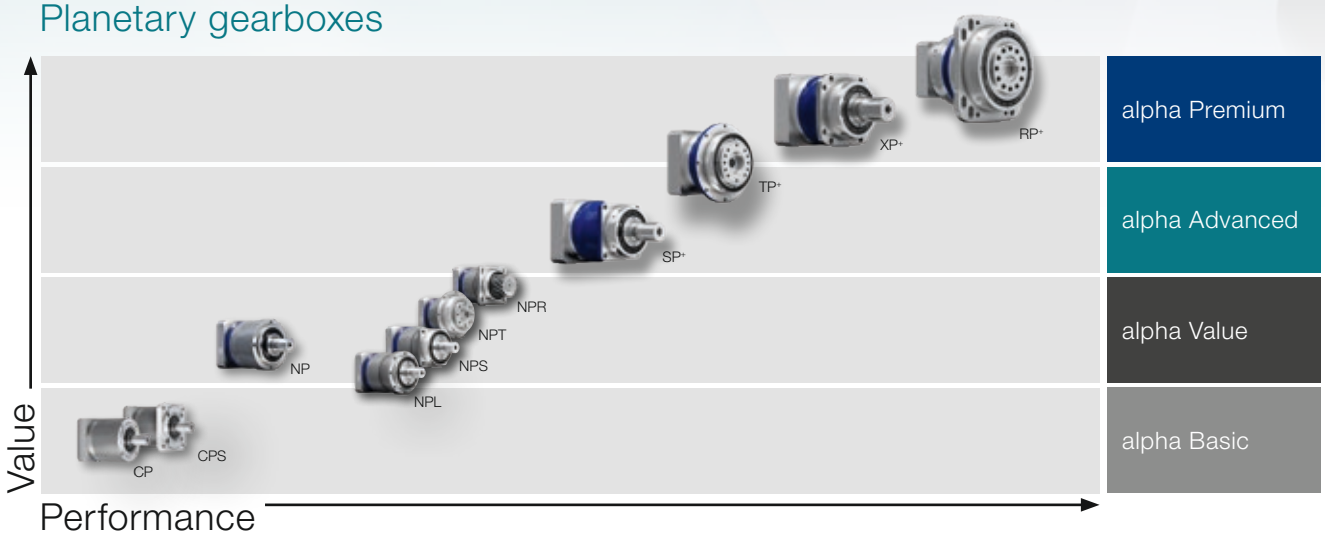

Hypoid, bevel and worm gearboxes

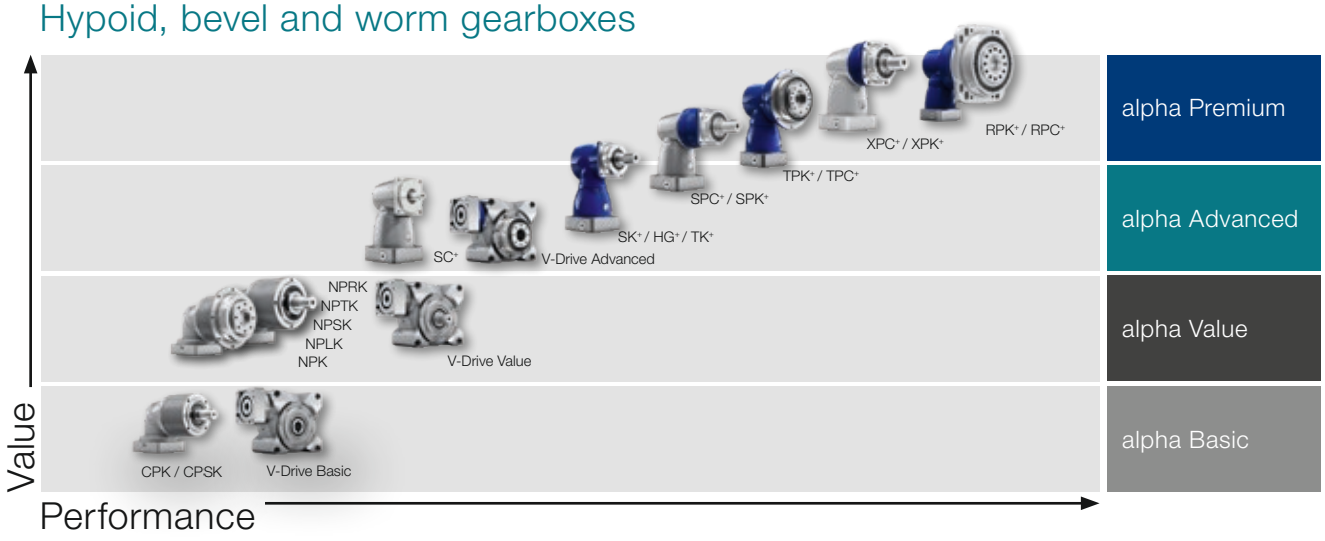

Know-how in every sector

Our solutions range from high-precision axes in manufacturing systems to packaging machines that must operate with maximum productivity in the smallest installation space. Overview:

- Machine tools and production technology
- Food and packaging machines
- Wood working machinery
- Printing and paper machines
- Robotics and automation

Linear systems

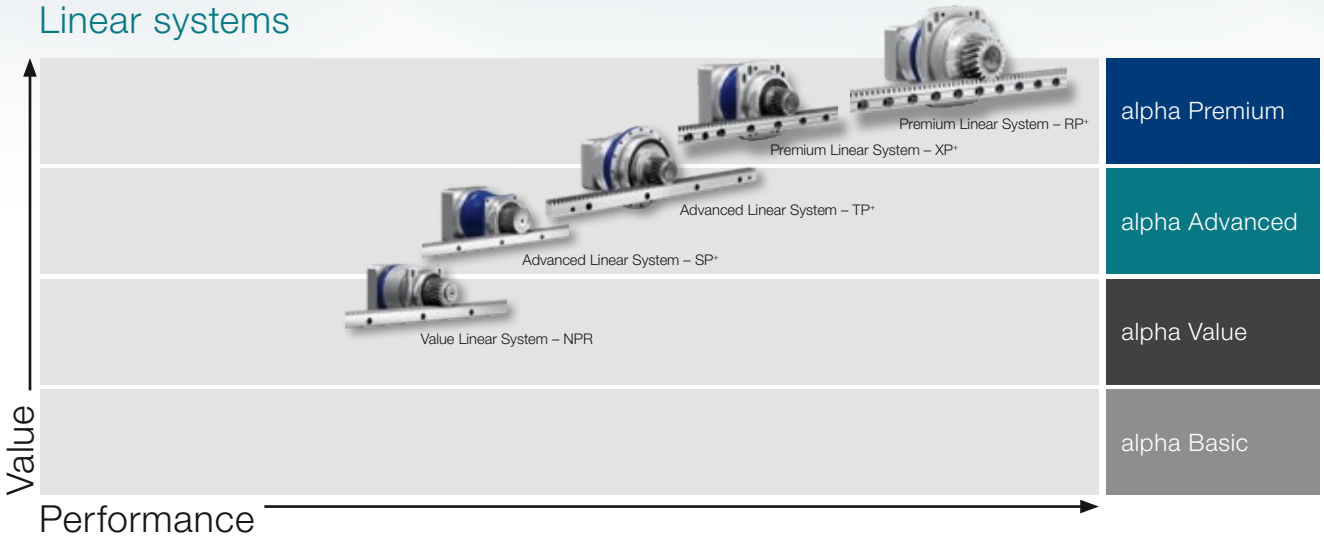

Actuators

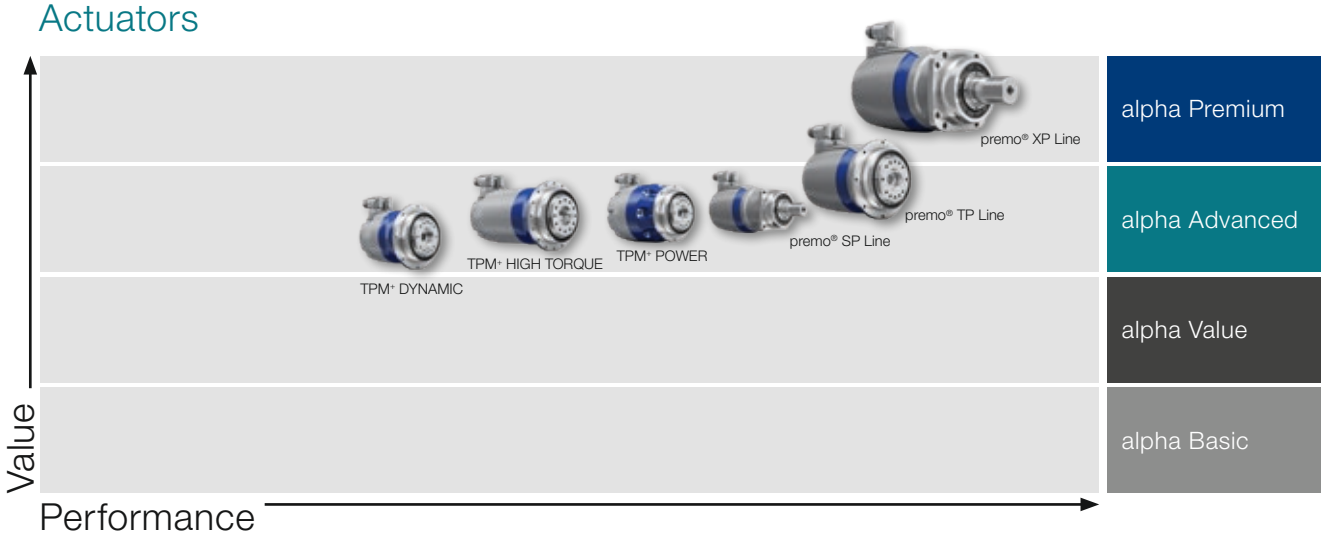

WITTENSTEIN alpha Engineering Tools – several ways to reach your objectives

Our software portfolio helps you choose the right drive

You can conveniently download dimension sheets and CAD data, select the best gearbox quickly and easily design complex kinematic sequences in detail – our software solutions offer various methods of selecting the best, most reliable drive on all axes.

CAD POINT
– Your smart catalog

- Performance data, dimension sheets and CAD data for all types of gearbox
- Available online without logging in
- Comprehensive documentation of the selection

www.wittenstein-cad-point.com

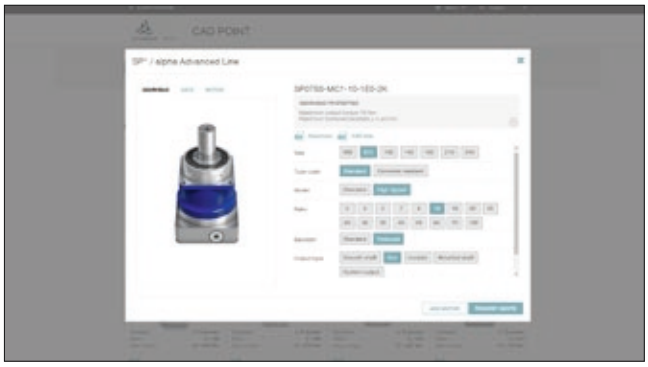

SIZING ASSISTANT
– Your Gearbox within Seconds

- Efficient gearbox selection in seconds
- Available online without logging in
- Access by specifying application or motor
- Information about price and delivery time
- Possibility of requesting quotation directly

www.sizing-assistant.com

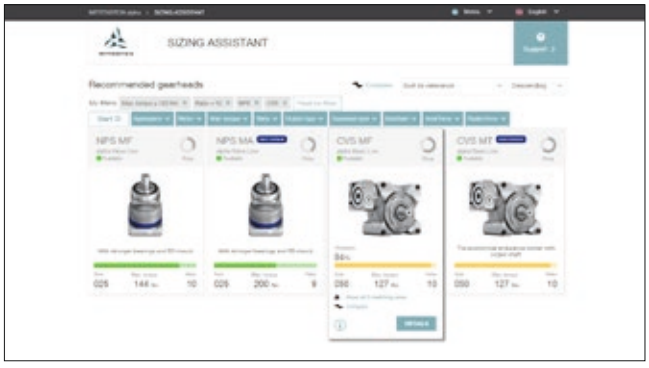

cymex®5
– Calculate on the Best

- Detailed calculation of complete drive trains
- Precise simulation of motion and load variables
- Downloadable software for complex designs

www.wittenstein-cymex.com

cymex®5 is the current standard

With cymex® 5, the dimensioning and design of complete drive trains (application + transformation + gearbox + motor) is now fast, simple and reliable. Calculation is made much easier through predefined standard applications. Consideration for all major influencing factors guarantees an optimal design and increases the efficiency of your machine.

cymex® 5 can define any number of axes simultaneously

In contrast to other design tools, cymex® 5 can define any number of axes at the same time. The version calculation is up to 60 % quicker as a result.

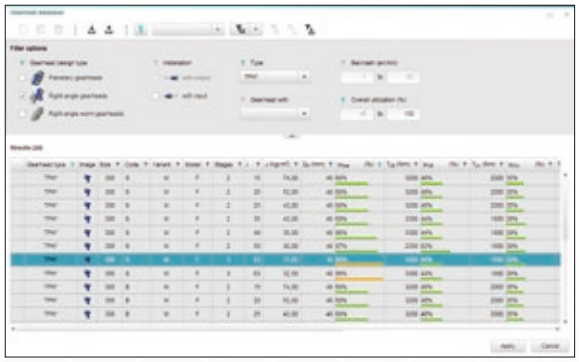

cymex® 5 has an extremely extensive database

More than 14,000 motors from the 50 most prominent motor manufacturers are stored in the design tool. Continuously updated, always state-of-the-art. Moreover, more than 8,000 gearbox versions from WITTENSTEIN alpha and over 200 combinations of linear systems with all relevant technical specifications can be found here.

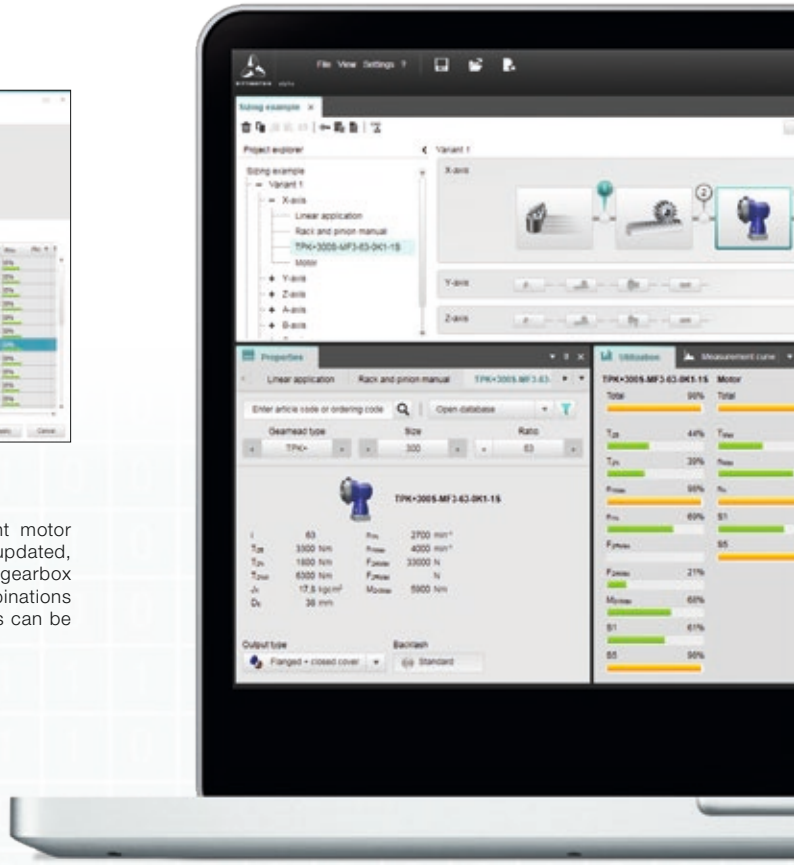

Free download

The basic version of cymex® 5 design software is available as a free download.

www.wittenstein-cymex.com

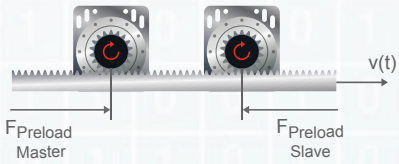

cymex® 5 incorporates the completely new Master / Slave function*

The Master / Slave function enables the electrically clamped configuration of two drives. The mutual tensioning of master and slave eliminates the backlash in the drive train and provides for a high degree of rigidity in the machine.

*Premium function, on request.

cymex®5

cymex® 5 has a unique optimization calculator*

During the design process, cymex® 5 provides optimization suggestions for the selected gearbox, which increase reliability and efficiency while ensuring your gearbox has the perfect dimensions e.g. through downsizing. This saves on costs and reduces the installation space in the machine.

cymex® 5 offers comprehensive documentation

Following the geometry comparison, cymex® 5 creates calculation documentation and generates data sheets for gearbox and motor on request. Furthermore, the 2D and 3D CAD data of selected components can be retrieved.

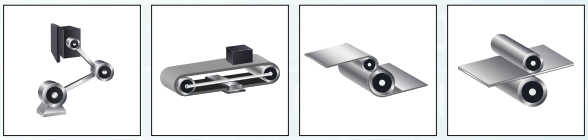

cymex® 5 enables the precise simulation of motion and load variables

The optimized software offers many options for the individual design of the drive train. These have been integrated to supplement the existing applications already in cymex® 3: the crank, conveyor, center winder and feed roll.

11 languages

alpha Advanced Line – the perfect solution for demanding applications

Our SP+ planetary gearbox has been setting the benchmark for decades

The seed of WITTENSTEIN alpha was planted more than 30 years ago and many generations of SP+ planetary gearboxes have consistently set new standards among planetary gearboxes ever since. Our engineers are determined to make each new generation of gearboxes even better and more powerful than the one before. As a result, we manufacture superior products which are ideal for the demanding applications of our customers.

The latest alpha Advanced Line – even more powerful

Our SP+ and TP+ bestsellers have been further developed to significantly increase the power density. This optimization has increased speed and torque values considerably while simultaneously reducing running noise. Lower no-load running torques reduce occurring losses. This significantly increases the overall energy efficiency. The HIGH SPEED and HIGH TORQUE variants achieve even greater performance dimensions and higher speeds. At the same time the extremely compact design provides significant space savings, which is especially important in small installation spaces.

Suitable for all requirements

Whether planetary, hypoid, bevel or worm gears, the alpha Advanced Line always offers our customers a suitable solution for their specific applications, regardless of the required performance range. With more than 30 product variants in the alpha Advanced Line alone, applications can be fully equipped with our gearboxes, even in combination with compatible linear systems. The high-precision all-rounders of the alpha Advanced Line operate with an impressive accuracy range of 1 - 5 arcmin and can be used in any application.

Your benefits at a glance

- **Maximum power density**
- **Maximum speeds, torques and positioning accuracies**
- **Low operating noise**
- **Wide variety of variants and systems**
- **Extensive experience and outstanding safety**

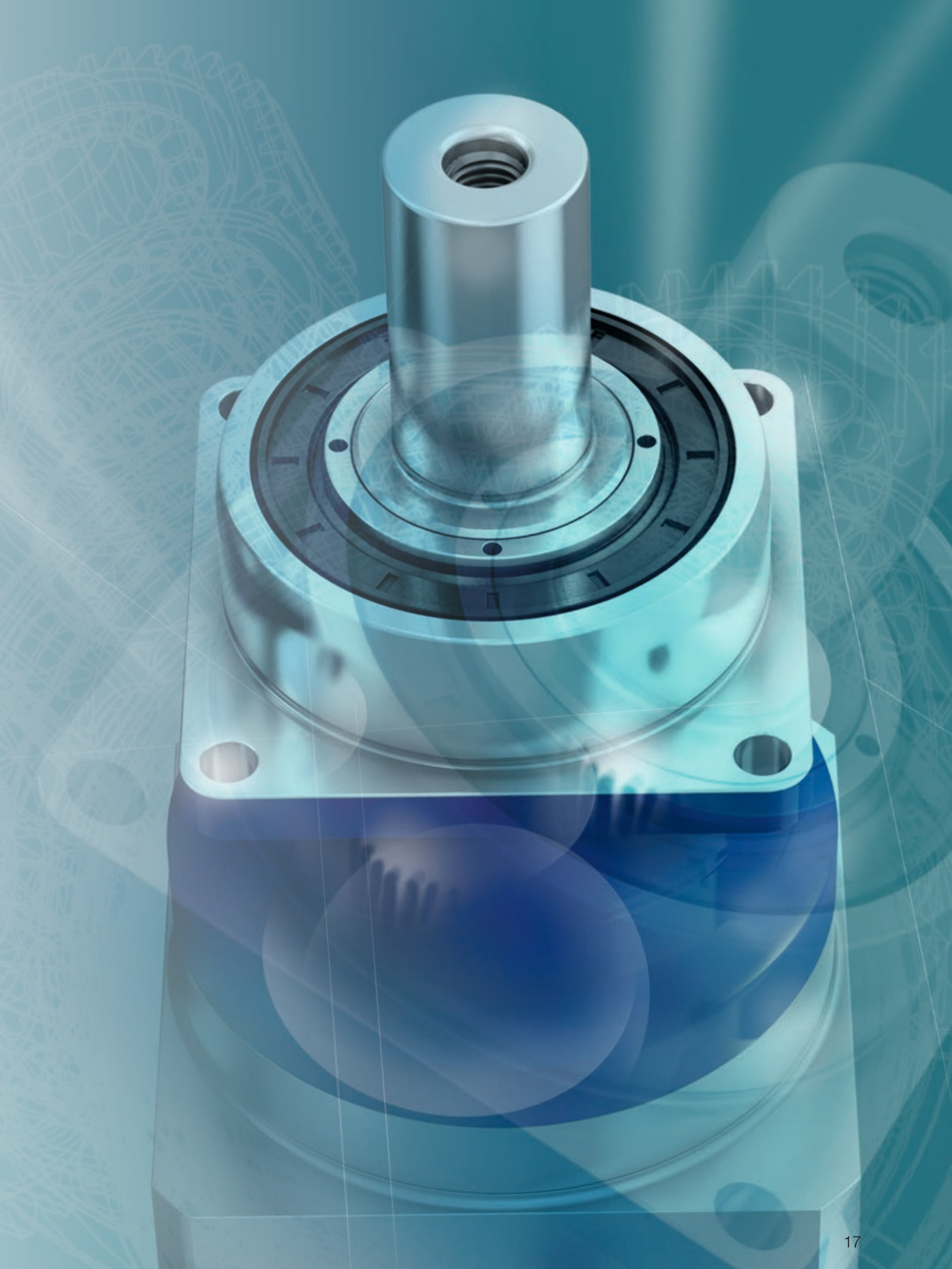

alpha Advanced Line – Product overview

Planetary gearboxes

This series is characterized by outstanding power density resulting from an extremely compact design. The HIGH SPEED and HIGH TORQUE variants achieve even greater torsional rigidity values and performance dimensions with regard to speed and torque.

SP+ / SP+ HIGH SPEED

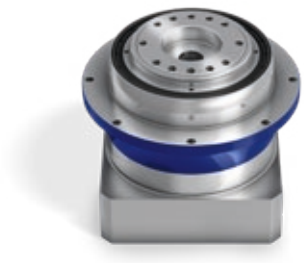

TP+

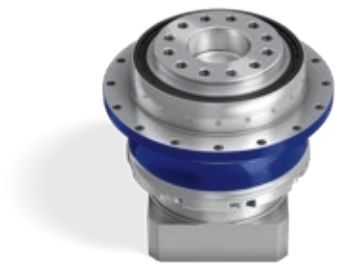

TP+ HIGH TORQUE

Hypoid gearboxes

Maximum performance in restricted mounting situations. Our hypoid gearboxes are characterized by an extremely high power density with a wide variety of variants. This strong combination can meet virtually any application requirements.

HG+

SK+

SPK+

TK+

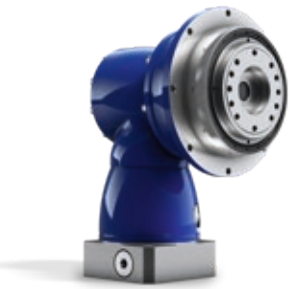

TPK+

TPK+ HIGH TORQUE

Bevel gearboxes

High performances at low gear ratios is the main strength of this series, which can be installed in the smallest of spaces. Additionally a high efficiency of 97 % ensures efficient operation.

SC+

SPC+

TPC+

Worm gearboxes

In addition to an extremely high power density, our powerful V-Drive Advanced series is characterized by a consistently low backlash throughout the product life cycle. Flexible output shapes allow the gearbox to be used in a wide range of applications. The servo worm gears are suitable both for cyclic operation and applications in continuous operation.

VH+

VS+

VT+

Application-specific solutions

Special requirements need special solutions. Whether in highly dynamic Delta robotics applications or the food industry with a focus on hygienic design. We offer optimal solutions for your specific applications.

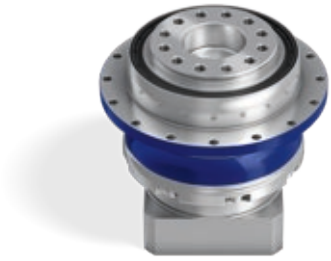

DP+

HDP+

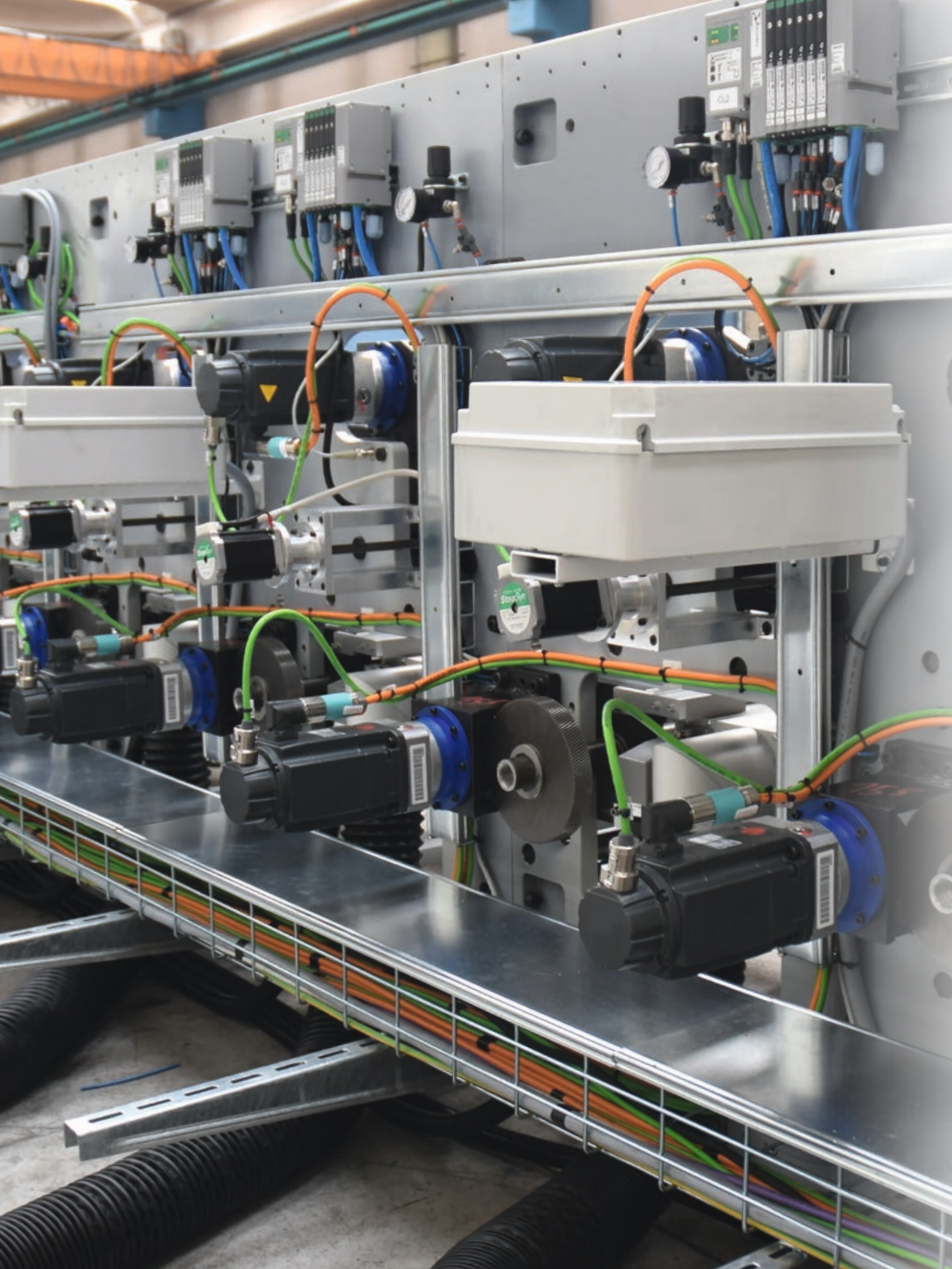

alpha Advanced Line in action

TP+ / TP+ HIGH TORQUE – Compact precision

Maximum precision, perfect true-running accuracy and high speeds are essential requirements for flexographic printing presses. The TP+ and TP+ HIGH TORQUE planetary gearboxes of WITTENSTEIN alpha incorporate all of these characteristics, resulting in a uniquely high printing quality and increased machine output.

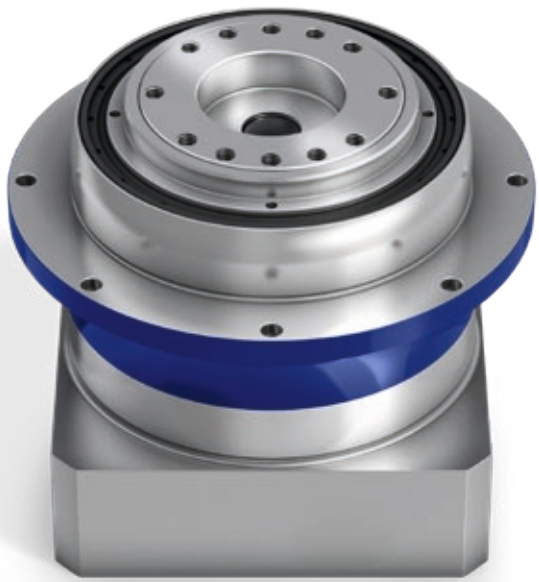

Advanced Line products can also be used in machines that generate rotary movements under extreme loads such as wood working machinery, 7th axis applications or in bottling plants.

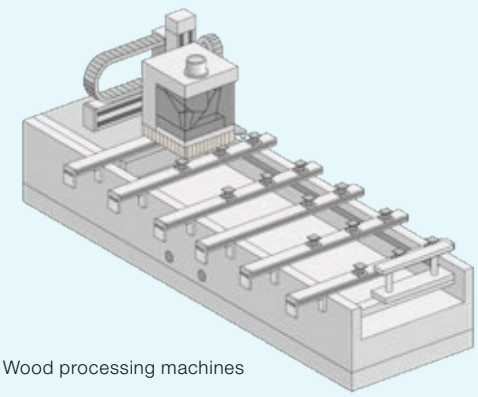

Wood processing machines

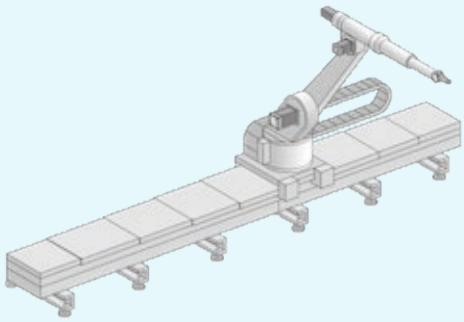

7th axis

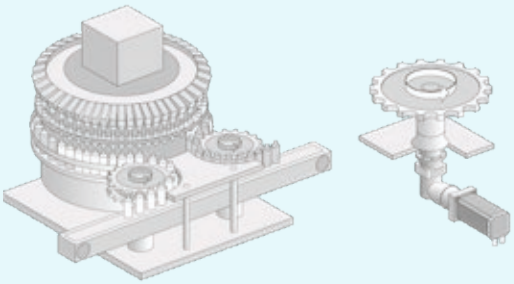

Bottling plant

SP+ and TP+ planetary gearboxes

When maximum power density is vital.

SP+ / SP+ HIGH SPEED – The classic all-rounder

SP+

The standard version of these low-backlash planetary gearboxes with output shaft is ideally suited for high positioning accuracy and highly dynamic cyclic operation. The SP+ HIGH SPEED is particularly appropriate for applications with maximum speeds during continuous operation.

Product highlights

Max. torsional backlash [arcmin] ≤ 1 – 4

Various output configurations
Smooth shaft, shaft with key, splined shaft (DIN 5480), blind hollow shaft

High nominal speeds
SP+ HIGH SPEED version for applications in continuous operation

Flexible drive options
Clamping hub socket, coupling, optimized mass inertia, keyed clamping hub socket

Other gearbox models
Corrosion resistant design, ATEX, food-grade lubrication, low friction version

The SP+ compared to the industry standard

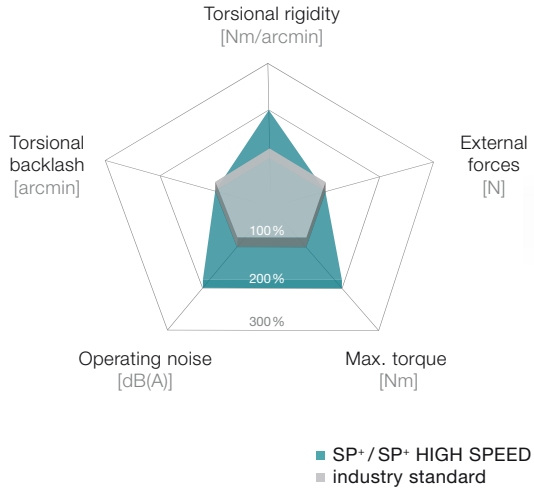

SP+ planetary gearbox in corrosion resistant design

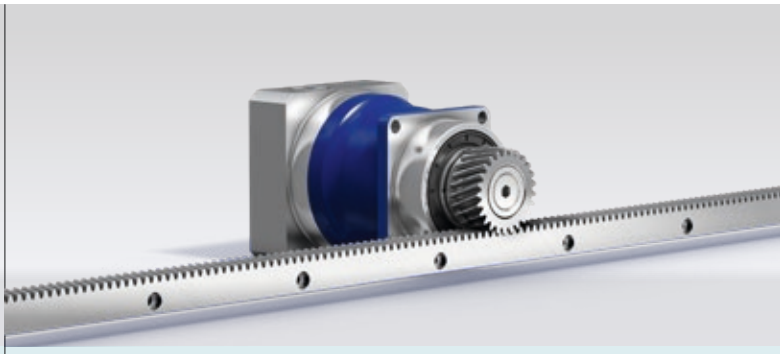

SP+ with rack and pinion

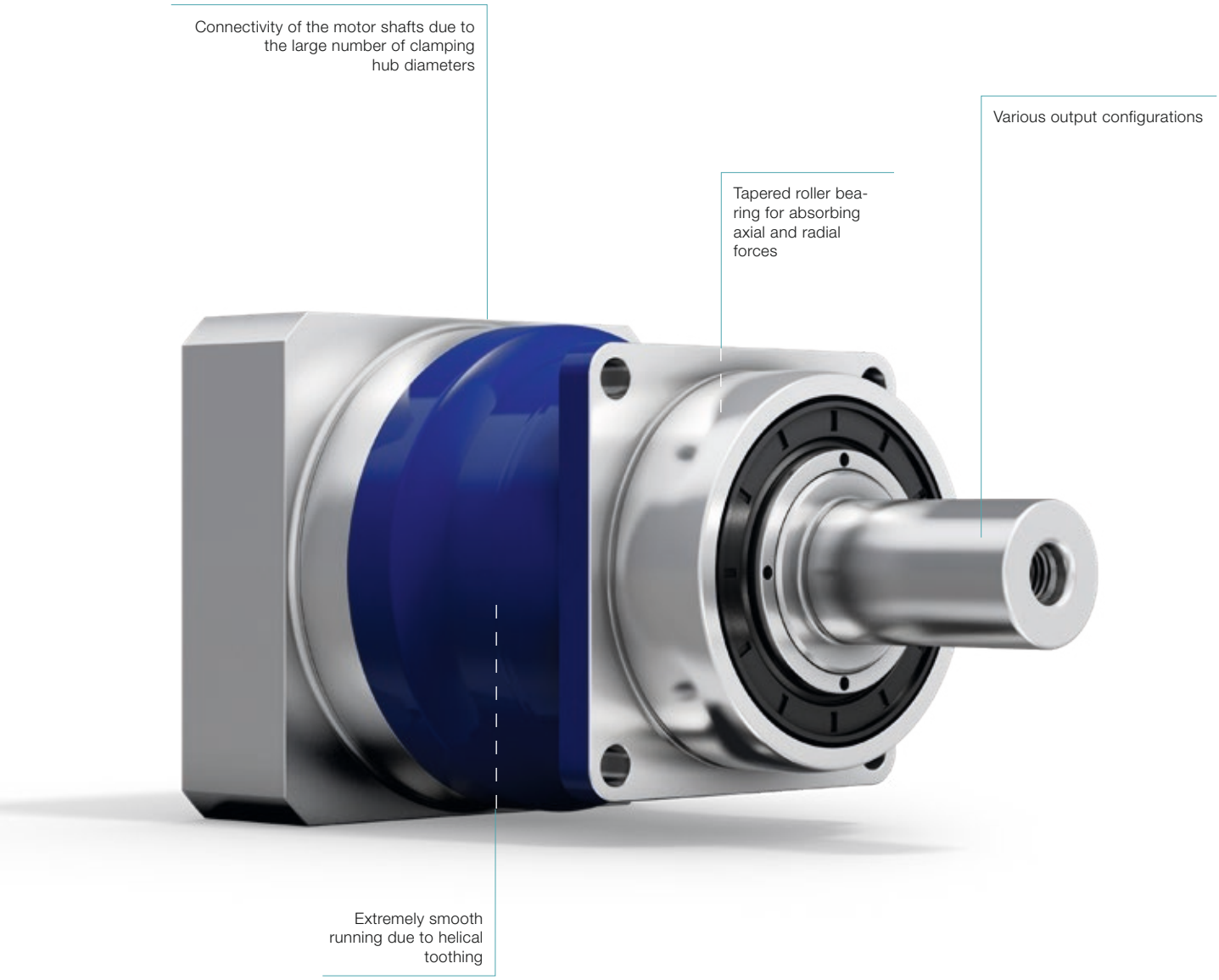

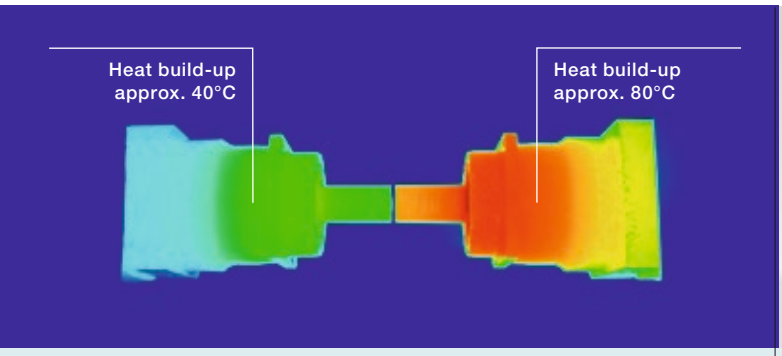

SP⁺ HIGH SPEED MC version

Industry standard

SP⁺ with metal bellows coupling

				1-stage					
Ratio			*i*		**3**	**4**	**5**	**7**	**8**	**10**
Max. torque [a) b) e)]			T_{2a}	*Nm*	48	67	67	67	51	51
				in.lb	425	595	595	595	453	453
Max. acceleration torque [b) e)] (max. 1000 cycles per hour)			T_{2B}	*Nm*	36	50	50	50	38	38
				in.lb	319	443	443	443	336	336
Nominal torque (at n_{1N})			T_{2N}	*Nm*	21	27	27	26	26	27
				in.lb	190	239	236	226	230	237
Emergency stop torque [a) b) e)] (permitted 1000 times during the service life of the gearbox)			T_{2Not}	*Nm*	96	109	109	109	100	100
				in.lb	850	965	965	965	885	885
Permitted average input speed (at T_{2N} and 20 °C ambient temperature) [d)]			n_{1N}	*rpm*	3300	3300	3300	4000	4000	4000
Max. input speed			n_{1Max}	*rpm*	7500	7500	7500	7500	7500	7500
Mean no load running torque [b)] (at n_1 = 3000 rpm and 20 °C gearbox temperature)			T_{012}	*Nm*	0.68	0.52	0.48	0.34	0.32	0.32
				in.lb	6.0	4.6	4.2	3.0	2.8	2.8
Max. backlash			j_t	*arcmin*	Standard ≤ 4 / Reduced ≤ 2					
Torsional rigidity [b)]			C_{t21}	*Nm/arcmin*	3.5					
				in.lb/arcmin	31					
Max. axial force [c)]			F_{2AMax}	*N*	2400					
				lb_f	540					
Max. lateral force [c)]			F_{2QMax}	*N*	2800					
				lb_f	630					
Max. tilting moment			M_{2KMax}	*Nm*	152					
				in.lb	1345					
Efficiency at full load			η	%	97					
Service life			L_h	*h*	> 20000					
Weight (incl. standard adapter plate)			*m*	*kg*	1.9					
				lb_m	4.2					
Operating noise (at reference ratio and reference speed – ratio-specific values available in cymex®)			L_{PA}	*dB(A)*	≤ 58					
Max. permitted housing temperature				*°C*	+90					
				F	194					
Ambient temperature				*°C*	–15 to +40					
				F	5 to 104					
Lubrication					Lubricated for life					
Direction of rotation					In- and output same direction					
Protection class					IP 65					
Metal bellows coupling (recommended product type – validate sizing with cymex®)					BC2-00060AA016.000-X					
Bore diameter of coupling on the application side				*mm*	X = 012.000 - 035.000					
Mass moment of inertia (relates to the drive) Clamping hub diameter [mm] Optimized mass inertia version available on request	B	11	J_1	$kgcm^2$	0.21	0.15	0.12	0.10	0.10	0.09
				10^{-3} $in.lb.s^2$	0.19	0.13	0.11	0.09	0.09	0.08
	C	14	J_1	$kgcm^2$	0.28	0.22	0.20	0.18	0.16	0.16
				10^{-3} $in.lb.s^2$	0.25	0.19	0.18	0.16	0.14	0.14
	E	19	J_1	$kgcm^2$	0.61	0.55	0.52	0.50	0.49	0.49
				10^{-3} $in.lb.s^2$	0.54	0.49	0.46	0.44	0.43	0.43

Please use our sizing software cymex® for a detailed sizing – **www.wittenstein-cymex.com**

[a)] At max. 10 % F_{2QMax}
[b)] Valid for standard clamping hub diameter
[c)] Refers to center of the output shaft or flange
[d)] Please reduce input speed at higher ambient temperatures
[e)] Smooth shaft

View A | View B

1-stage

Motor shaft diameter [mm]

up to 11 [4] (B) clamping hub diameter

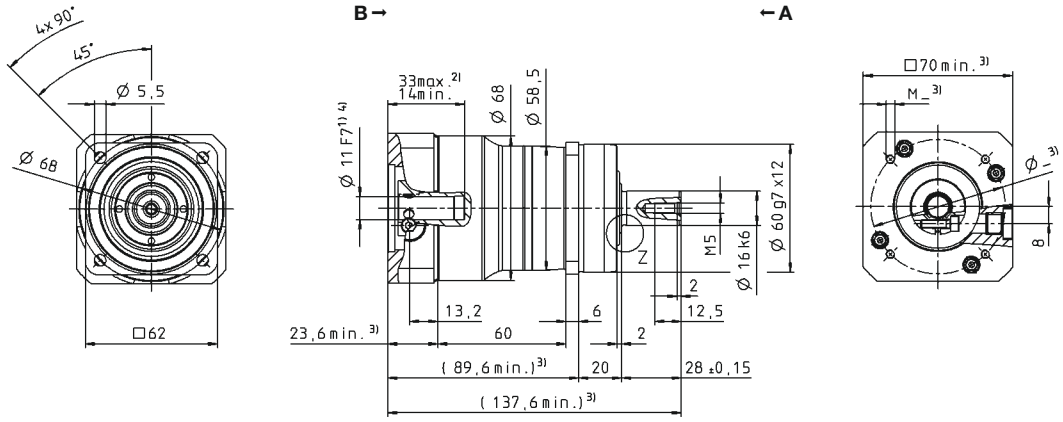

up to 14 [4] (C) [5] clamping hub diameter

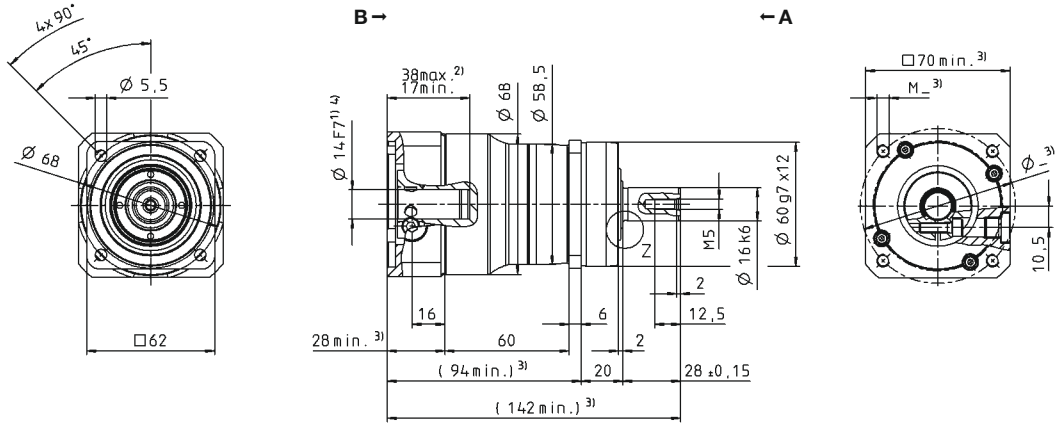

up to 19 [4] (E) clamping hub diameter

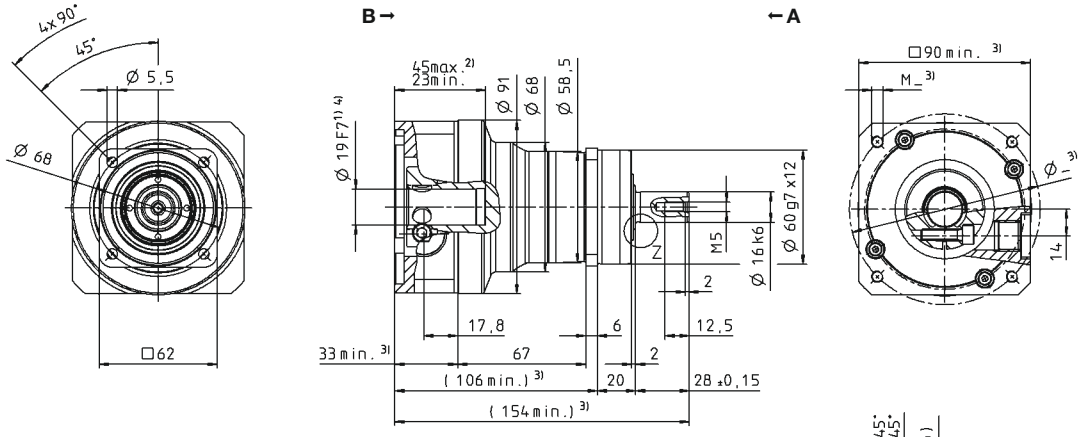

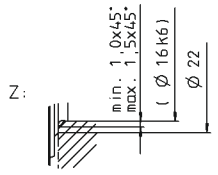

Other output variants

Shaft with key

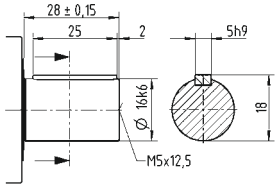

Splined shaft (DIN 5480)

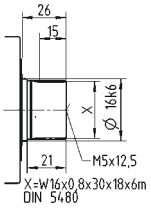

Shaft mounted

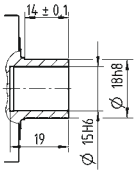

Non-tolerated dimensions are nominal dimensions

1) Check motor shaft fit
2) Min./Max. permissible motor shaft length. Longer motor shafts are possible, please contact alpha.
3) The dimensions depend on the motor
4) Smaller motor shaft diameter is compensated by a bushing with a minimum thickness of 1 mm
5) Standard clamping hub diameter

SP+ 060 MF 2-stage

			2-stage										
Ratio	i		**16**	**20**	**25**	**28**	**32**	**35**	**40**	**50**	**64**	**70**	**100**
Max. torque [a) b) e)]	T_{2a}	*Nm*	57	57	67	57	57	67	57	67	48	56	48
		in.lb	507	507	595	507	507	595	507	595	423	499	423
Max. acceleration torque [b) e)] (max. 1000 cycles per hour)	T_{2B}	*Nm*	50	50	50	50	50	50	50	50	38	50	38
		in.lb	443	443	443	443	443	443	443	443	336	443	336
Nominal torque (at n_{1N})	T_{2N}	*Nm*	38	40	40	40	38	40	40	40	31	40	31
		in.lb	332	354	351	357	333	357	357	357	270	357	272
Emergency stop torque [a) b) e)] (permitted 1000 times during the service life of the gearbox)	T_{2Not}	*Nm*	109	109	109	109	109	109	109	109	109	109	100
		in.lb	965	965	965	965	965	965	965	965	965	965	885
Permitted average input speed (at T_{2N} and 20 °C ambient temperature) [d)]	n_{1N}	*rpm*	4400	4400	4400	4400	4400	4400	4400	4800	4800	5500	5500
Max. input speed	n_{1Max}	*rpm*	8500	8500	8500	8500	8500	8500	8500	8500	8500	8500	8500
Mean no load running torque [b)] (at n_1 = 3000 rpm and 20 °C gearbox temperature)	T_{012}	*Nm*	0.28	0.25	0.23	0.22	0.24	0.20	0.20	0.19	0.19	0.17	0.18
		in.lb	2.5	2.2	2.0	1.9	2.1	1.8	1.8	1.7	1.7	1.5	1.6
Max. backlash	j_t	*arcmin*	Standard ≤ 6 / Reduced ≤ 4										
Torsional rigidity [b)]	C_{t21}	*Nm/arcmin*	3.5										
		in.lb/arcmin	31										
Max. axial force [c)]	F_{2AMax}	*N*	2400										
		lb_f	540										
Max. lateral force [c)]	F_{2QMax}	*N*	2800										
		lb_f	630										
Max. tilting moment	M_{2KMax}	*Nm*	152										
		in.lb	1345										
Efficiency at full load	η	*%*	94										
Service life	L_h	*h*	> 20000										
Weight (incl. standard adapter plate)	m	*kg*	2.0										
		lb_m	4.4										
Operating noise (at reference ratio and reference speed – ratio-specific values available in cymex®)	L_{PA}	*dB(A)*	≤ 57										
Max. permitted housing temperature		*°C*	+90										
		F	194										
Ambient temperature		*°C*	–15 to +40										
		F	5 to 104										
Lubrication			Lubricated for life										
Direction of rotation			In- and output same direction										
Protection class			IP 65										
Metal bellows coupling (recommended product type – validate sizing with cymex®)			BC2-00060AA016.000-X										
Bore diameter of coupling on the application side		*mm*	X = 012.000 - 035.000										
Mass moment of inertia (relates to the drive) B 11	J_1	$kgcm^2$	0.077	0.069	0.068	0.061	0.061	0.061	0.057	0.057	0.056	0.056	0.056
		10^{-3} $in.lb.s^2$	0.068	0.061	0.060	0.054	0.054	0.054	0.050	0.050	0.050	0.050	0.050
Clamping hub diameter [mm] C 14	J_1	$kgcm^2$	0.17	0.16	0.16	0.16	0.16	0.16	0.15	0.15	0.15	0.15	0.15
Optimized mass inertia version available on request		10^{-3} $in.lb.s^2$	0.15	0.14	0.14	0.14	0.14	0.14	0.13	0.13	0.13	0.13	0.13

Please use our sizing software cymex® for a detailed sizing – **www.wittenstein-cymex.com**

a) At max. 10 % F_{2QMax}
b) Valid for standard clamping hub diameter
c) Refers to center of the output shaft or flange
d) Please reduce input speed at higher ambient temperatures
e) Smooth shaft

View A View B

2-stage

Motor shaft diameter [mm]

up to 11 [4] (B) [5] clamping hub diameter

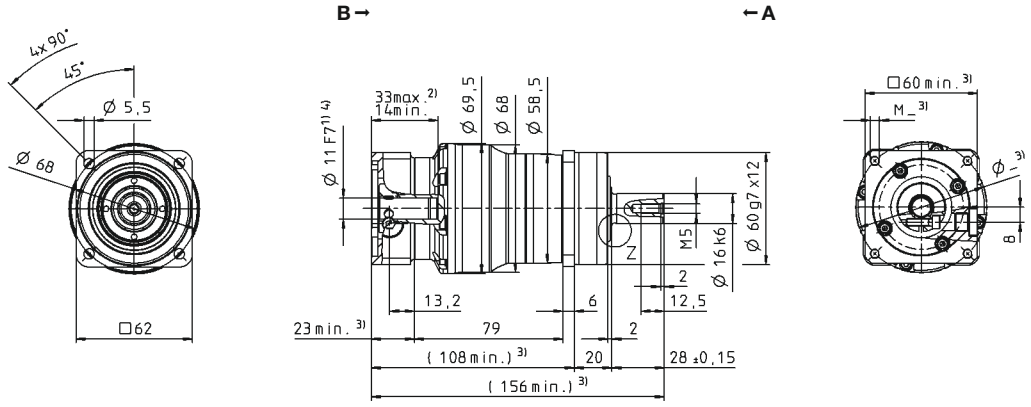

up to 14 [4] (C) clamping hub diameter

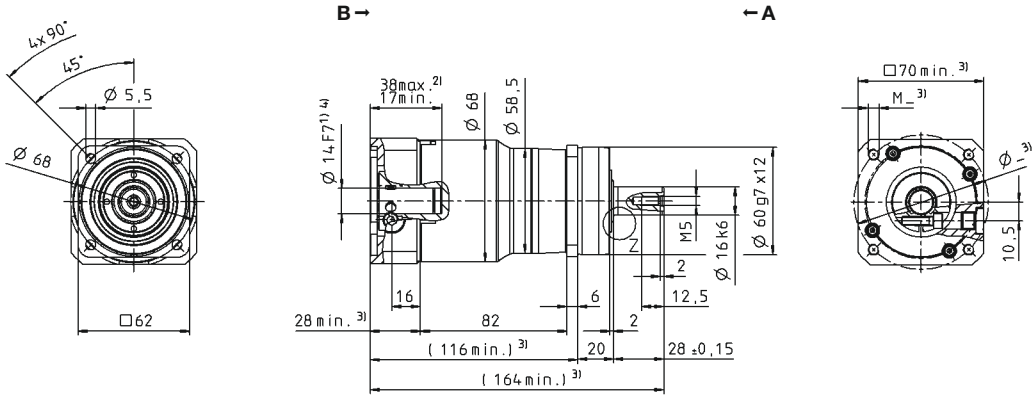

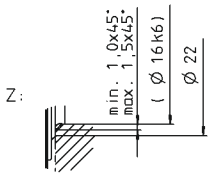

Other output variants

Shaft with key

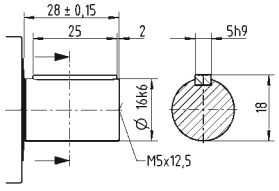

Splined shaft (DIN 5480)

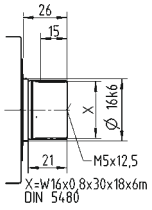

Shaft mounted

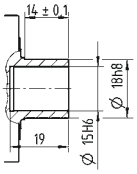

Non-tolerated dimensions are nominal dimensions

1) Check motor shaft fit
2) Min./Max. permissible motor shaft length. Longer motor shafts are possible, please contact alpha.
3) The dimensions depend on the motor
4) Smaller motor shaft diameter is compensated by a bushing with a minimum thickness of 1 mm
5) Standard clamping hub diameter

				1-stage					
Ratio			*i*		**3**	**4**	**5**	**7**	**8**	**10**
Max. torque [a) b) e)]			T_{2a}	*Nm*	136	176	176	176	152	152
				in.lb	1204	1558	1558	1558	1345	1345
Max. acceleration torque [b) e)] (max. 1000 cycles per hour)			T_{2B}	*Nm*	102	132	132	132	114	114
				in.lb	903	1168	1168	1168	1009	1009
Nominal torque (at n_{1N})			T_{2N}	*Nm*	63	81	81	81	80	81
				in.lb	558	719	716	719	712	720
Emergency stop torque [a) b) e)] (permitted 1000 times during the service life of the gearbox)			T_{2Not}	*Nm*	139	185	250	250	250	250
				in.lb	1230	1640	2213	2213	2213	2213
Permitted average input speed (at T_{2N} and 20 °C ambient temperature) [d)]			n_{1N}	*rpm*	2900	2900	2900	3100	3100	3100
Max. input speed			n_{1Max}	*rpm*	7500	7500	7500	7500	7500	7500
Mean no load running torque [b)] (at n_1 = 3000 rpm and 20 °C gearbox temperature)			T_{012}	*Nm*	1.5	1.4	0.96	0.72	0.55	0.52
				in.lb	14	12	8.5	6.4	4.9	4.6
Max. backlash			j_t	*arcmin*	Standard ≤ 4 / Reduced ≤ 2					
Torsional rigidity [b)]			C_{t21}	*Nm/arcmin*	10					
				in.lb/arcmin	89					
Max. axial force [c)]			F_{2AMax}	*N*	3350					
				lb_f	754					
Max. lateral force [c)]			F_{2QMax}	*N*	4200					
				lb_f	945					
Max. tilting moment			M_{2KMax}	*Nm*	236					
				in.lb	2089					
Efficiency at full load			η	*%*	97					
Service life			L_h	*h*	> 20000					
Weight (incl. standard adapter plate)			*m*	*kg*	3.9					
				lb_m	8.6					
Operating noise (at reference ratio and reference speed – ratio-specific values available in cymex®)			L_{PA}	*dB(A)*	≤ 59					
Max. permitted housing temperature				*°C*	+90					
				F	194					
Ambient temperature				*°C*	–15 to +40					
				F	5 to 104					
Lubrication					Lubricated for life					
Direction of rotation					In- and output same direction					
Protection class					IP 65					
Metal bellows coupling (recommended product type – validate sizing with cymex®)					BC2-00150AA022.000-X					
Bore diameter of coupling on the application side				*mm*	X = 019.000 - 042.000					
Mass moment of inertia (relates to the drive) Clamping hub diameter [mm] Optimized mass inertia version available on request	C	14	J_1	$kgcm^2$	0.86	0.61	0.51	0.42	0.38	0.38
				10^{-3} $in.lb.s^2$	0.76	0.54	0.45	0.37	0.34	0.34
	E	19	J_1	$kgcm^2$	1.03	0.78	0.68	0.59	0.54	0.54
				10^{-3} $in.lb.s^2$	0.91	0.69	0.60	0.52	0.48	0.48
	G	24	J_1	$kgcm^2$	2.40	2.15	2.05	1.96	1.91	1.91
				10^{-3} $in.lb.s^2$	2.12	1.90	1.81	1.73	1.69	1.69

Please use our sizing software cymex® for a detailed sizing – **www.wittenstein-cymex.com**

[a)] At max. 10 % F_{2QMax}
[b)] Valid for standard clamping hub diameter
[c)] Refers to center of the output shaft or flange
[d)] Please reduce input speed at higher ambient temperatures
[e)] Smooth shaft

View A | View B

1-stage

Motor shaft diameter [mm]

up to 14 [4] (C) clamping hub diameter

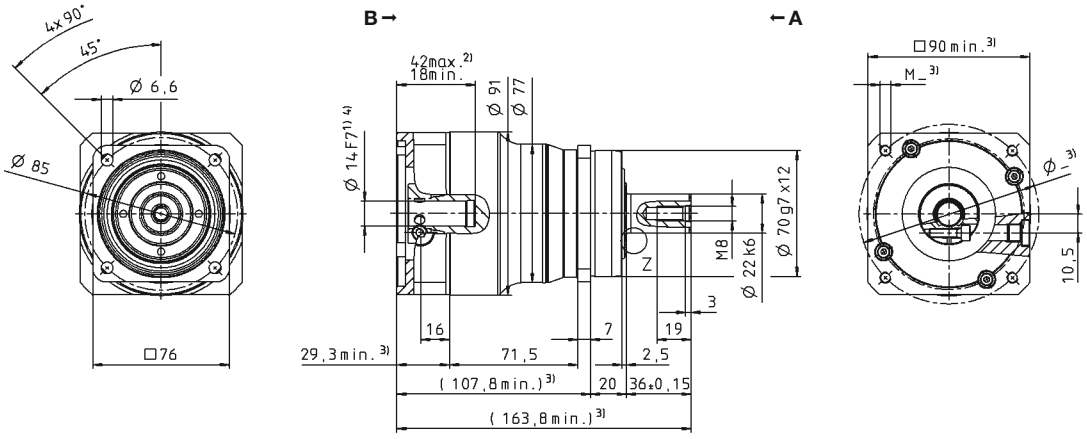

up to 19 [4] (E) [5] clamping hub diameter

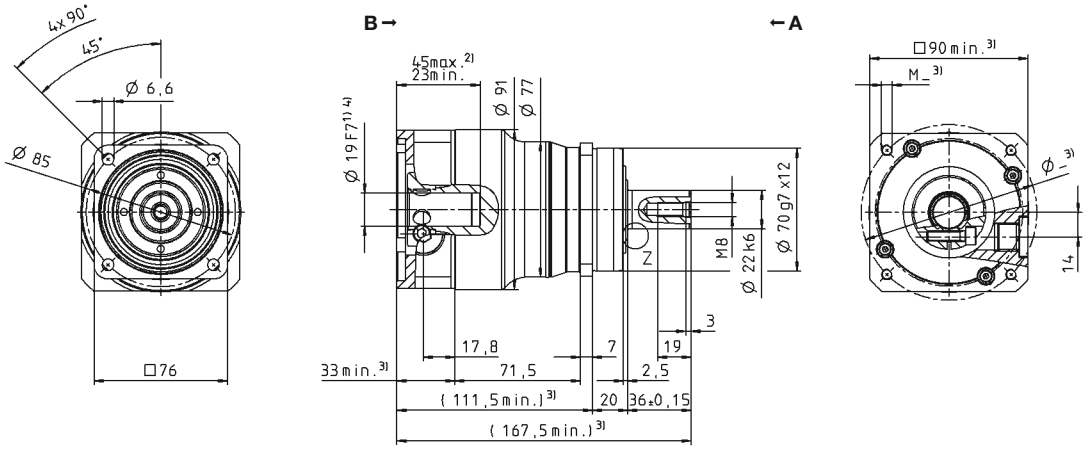

up to 24 [4] (G) clamping hub diameter

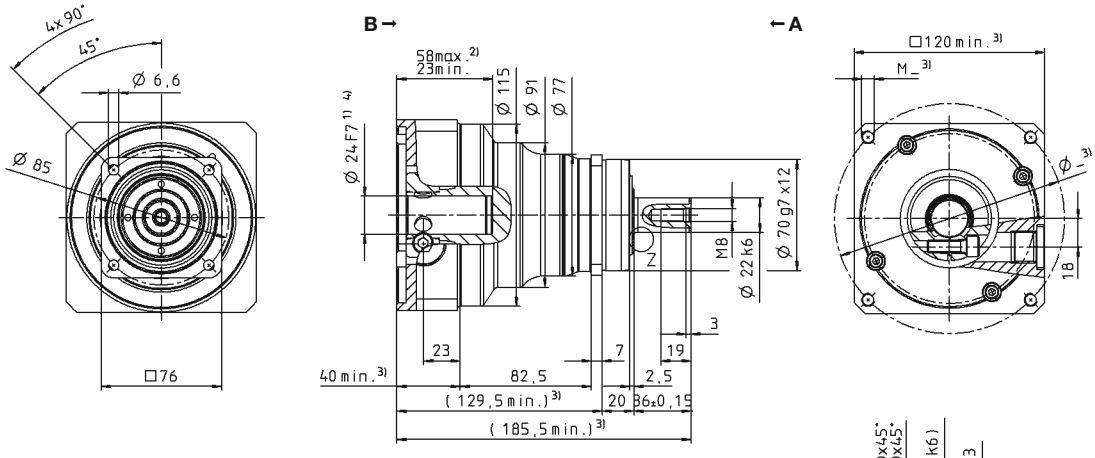

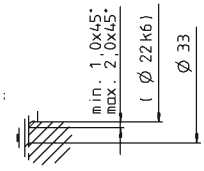

Other output variants

Shaft with key

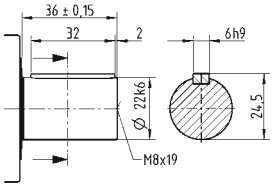

Splined shaft (DIN 5480)

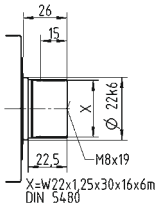

Shaft mounted

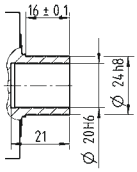

Non-tolerated dimensions are nominal dimensions

1) Check motor shaft fit
2) Min./Max. permissible motor shaft length. Longer motor shafts are possible, please contact alpha.
3) The dimensions depend on the motor
4) Smaller motor shaft diameter is compensated by a bushing with a minimum thickness of 1 mm
5) Standard clamping hub diameter

				2-stage										
Ratio			*i*	**16**	**20**	**25**	**28**	**32**	**35**	**40**	**50**	**64**	**70**	**100**
Max. torque [a) b) e)]			T_{2a}	*Nm*	126	126	158	126	126	158	126	158	105	113	105
				in.lb	1118	1118	1398	1118	1118	1398	1118	1398	932	998	932
Max. acceleration torque [b) e)] (max. 1000 cycles per hour)			T_{2B}	*Nm*	126	126	132	126	126	132	126	132	105	113	105
				in.lb	1118	1118	1168	1118	1118	1168	1118	1168	932	998	932
Nominal torque (at n_{1N})			T_{2N}	*Nm*	101	101	106	101	101	106	101	106	84	90	84
				in.lb	895	895	935	895	895	935	895	935	746	799	746
Emergency stop torque [a) b) e)] (permitted 1000 times during the service life of the gearbox)			T_{2Not}	*Nm*	250	250	250	250	250	250	250	250	250	250	250
				in.lb	2213	2213	2213	2213	2213	2213	2213	2213	2213	2213	2213
Permitted average input speed (at T_{2N} and 20 °C ambient temperature) [d)]			n_{1N}	*rpm*	3500	3500	3500	3500	3500	3500	3500	3800	3800	4500	4500
Max. input speed			n_{1Max}	*rpm*	8500	8500	8500	8500	8500	8500	8500	8500	8500	8500	8500
Mean no load running torque [b)] (at n_1 = 3000 rpm and 20 °C gearbox temperature)			T_{012}	*Nm*	0.50	0.41	0.35	0.32	0.44	0.28	0.26	0.23	0.23	0.21	0.23
				in.lb	4.4	3.6	3.1	2.8	3.9	2.5	2.3	2.0	2.0	1.9	2.0
Max. backlash			j_t	*arcmin*	Standard ≤ 6 / Reduced ≤ 4										
Torsional rigidity [b)]			C_{t21}	*Nm/arcmin*	10										
				in.lb/arcmin	89										
Max. axial force [c)]			F_{2AMax}	*N*	3350										
				lb_f	754										
Max. lateral force [c)]			F_{2QMax}	*N*	4200										
				lb_f	945										
Max. tilting moment			M_{2KMax}	*Nm*	236										
				in.lb	2089										
Efficiency at full load			η	%	94										
Service life			L_h	*h*	> 20000										
Weight (incl. standard adapter plate)			*m*	*kg*	3.6										
				lb_m	8.0										
Operating noise (at reference ratio and reference speed – ratio-specific values available in cymex®)			L_{PA}	*dB(A)*	≤ 55										
Max. permitted housing temperature				*°C*	+90										
				F	194										
Ambient temperature				*°C*	–15 to +40										
				F	5 to 104										
Lubrication					Lubricated for life										
Direction of rotation					In- and output same direction										
Protection class					IP 65										
Metal bellows coupling (recommended product type – validate sizing with cymex®)					BC2-00150AA022.000-X										
Bore diameter of coupling on the application side				*mm*	X = 019.000 - 042.000										
Mass moment of inertia (relates to the drive) Clamping hub diameter [mm] Optimized mass inertia version available on request	B	11	J_1	$kgcm^2$	0.16	0.13	0.13	0.10	0.10	0.10	0.09	0.09	0.09	0.09	0.09
				10^{-3} $in.lb.s^2$	0.14	0.12	0.12	0.09	0.09	0.09	0.08	0.08	0.08	0.08	0.08
	C	14	J_1	$kgcm^2$	0.23	0.20	0.20	0.18	0.18	0.18	0.16	0.16	0.16	0.16	0.16
				10^{-3} $in.lb.s^2$	0.20	0.18	0.18	0.16	0.16	0.16	0.14	0.14	0.14	0.14	0.14
	E	19	J_1	$kgcm^2$	0.55	0.53	0.52	0.50	0.50	0.50	0.49	0.49	0.49	0.49	0.49
				10^{-3} $in.lb.s^2$	0.49	0.47	0.46	0.44	0.44	0.44	0.43	0.43	0.43	0.43	0.43

Please use our sizing software cymex® for a detailed sizing – **www.wittenstein-cymex.com**

[a)] At max. 10 % F_{2QMax}
[b)] Valid for standard clamping hub diameter
[c)] Refers to center of the output shaft or flange
[d)] Please reduce input speed at higher ambient temperatures
[e)] Smooth shaft

View A View B

2-stage

Motor shaft diameter [mm]

up to 11 [4] (B) clamping hub diameter

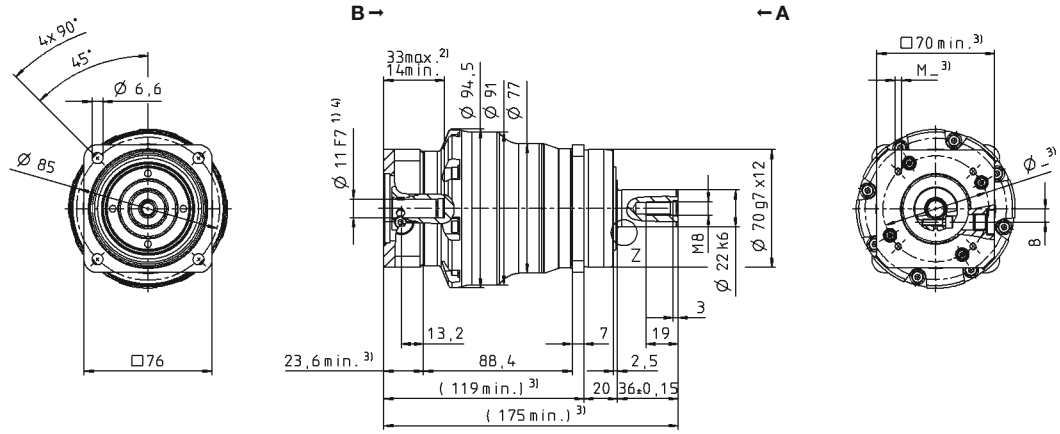

up to 14 [4] (C) [5] clamping hub diameter

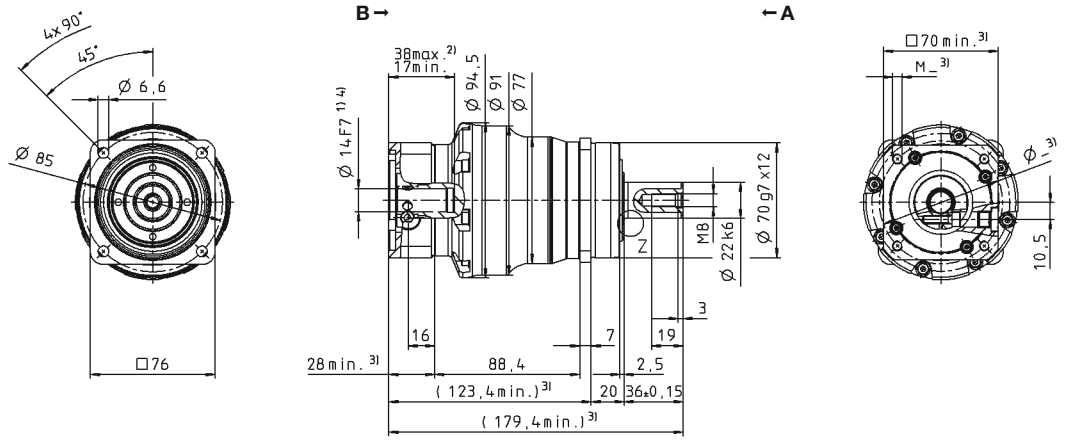

up to 19 [4] (E) clamping hub diameter

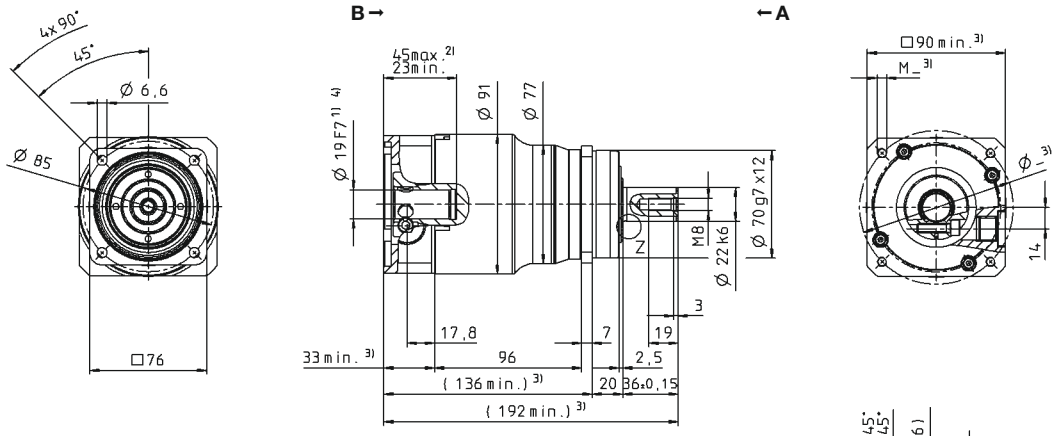

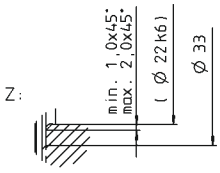

Other output variants

Shaft with key

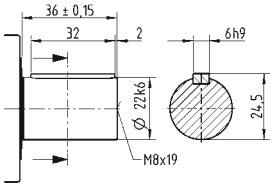

Splined shaft (DIN 5480)

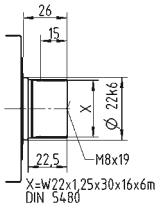

Shaft mounted

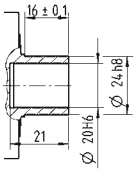

Non-tolerated dimensions are nominal dimensions
1) Check motor shaft fit
2) Min./Max. permissible motor shaft length. Longer motor shafts are possible, please contact alpha.
3) The dimensions depend on the motor
4) Smaller motor shaft diameter is compensated by a bushing with a minimum thickness of 1 mm
5) Standard clamping hub diameter

				1-stage					
Ratio			*i*		**3**	**4**	**5**	**7**	**8**	**10**
Max. torque [a) b) e)]			T_{2a}	*Nm*	376	495	495	428	376	376
				in.lb	3328	4381	4381	3784	3328	3328
Max. acceleration torque [b) e)] (max. 1000 cycles per hour)			T_{2B}	*Nm*	282	378	378	378	282	282
				in.lb	2496	3346	3346	3346	2496	2496
Nominal torque (at n_{1N})			T_{2N}	*Nm*	131	171	169	166	166	174
				in.lb	1157	1510	1498	1473	1470	1538
Emergency stop torque [a) b) e)] (permitted 1000 times during the service life of the gearbox)			T_{2Not}	*Nm*	500	625	625	625	625	625
				in.lb	4425	5532	5532	5532	5532	5532
Permitted average input speed (at T_{2N} and 20 °C ambient temperature) [d)]			n_{1N}	*rpm*	2500	2500	2500	2800	2800	2800
Max. input speed			n_{1Max}	*rpm*	5500	5500	5500	5500	5500	5500
Mean no load running torque [b)] (at n_1 = 3000 rpm and 20 °C gearbox temperature)			T_{012}	*Nm*	3.1	2.4	2.1	1.3	1.0	1.0
				in.lb	28	21	18	12	9.2	9.2
Max. backlash			j_t	*arcmin*	Standard ≤ 3 / Reduced ≤ 1					
Torsional rigidity [b)]			C_{t21}	*Nm/arcmin*	31					
				in.lb/arcmin	274					
Max. axial force [c)]			F_{2AMax}	*N*	5650					
				lb_f	1271					
Max. lateral force [c)]			F_{2QMax}	*N*	6600					
				lb_f	1485					
Max. tilting moment			M_{2KMax}	*Nm*	487					
				in.lb	4310					
Efficiency at full load			η	*%*	97					
Service life			L_h	*h*	> 20000					
Weight (incl. standard adapter plate)			*m*	*kg*	7.7					
				lb_m	17					
Operating noise (at reference ratio and reference speed – ratio-specific values available in cymex®)			L_{PA}	*dB(A)*	≤ 58					
Max. permitted housing temperature				*°C*	+90					
				F	194					
Ambient temperature				*°C*	–15 to +40					
				F	5 to 104					
Lubrication					Lubricated for life					
Direction of rotation					In- and output same direction					
Protection class					IP 65					
Metal bellows coupling (recommended product type – validate sizing with cymex®)					BC2-00300AA032.000-X					
Bore diameter of coupling on the application side				*mm*	X = 024.000 - 060.000					
Mass moment of inertia (relates to the drive) Clamping hub diameter [mm] Optimized mass inertia version available on request	E	19	J_1	$kgcm^2$	3.29	2.35	1.92	1.60	1.38	1.38
				10^{-3} $in.lb.s^2$	2.91	2.08	1.70	1.42	1.22	1.22
	G	24	J_1	$kgcm^2$	3.99	3.04	2.61	2.29	2.07	2.07
				10^{-3} $in.lb.s^2$	3.53	2.69	2.31	2.03	1.83	1.83
	H	28	J_1	$kgcm^2$	3.59	2.65	2.22	1.90	1.68	1.68
				10^{-3} $in.lb.s^2$	3.18	2.35	1.96	1.68	1.49	1.49
	K	38	J_1	$kgcm^2$	11.1	10.1	9.68	9.36	9.14	9.14
				10^{-3} $in.lb.s^2$	9.82	8.94	8.57	8.28	8.09	8.09

Please use our sizing software cymex® for a detailed sizing – **www.wittenstein-cymex.com**

[a)] At max. 10 % F_{2QMax}
[b)] Valid for standard clamping hub diameter
[c)] Refers to center of the output shaft or flange
[d)] Please reduce input speed at higher ambient temperatures
[e)] Smooth shaft

View A | View B

1-stage

Motor shaft diameter [mm]

up to 19 [4] (E) clamping hub diameter

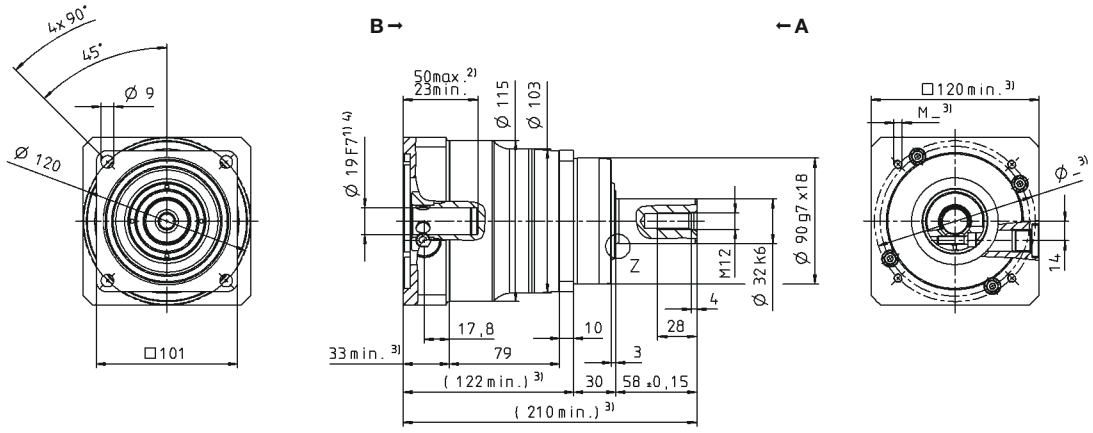

up to 24/28 [4] (G[5]/H) clamping hub diameter

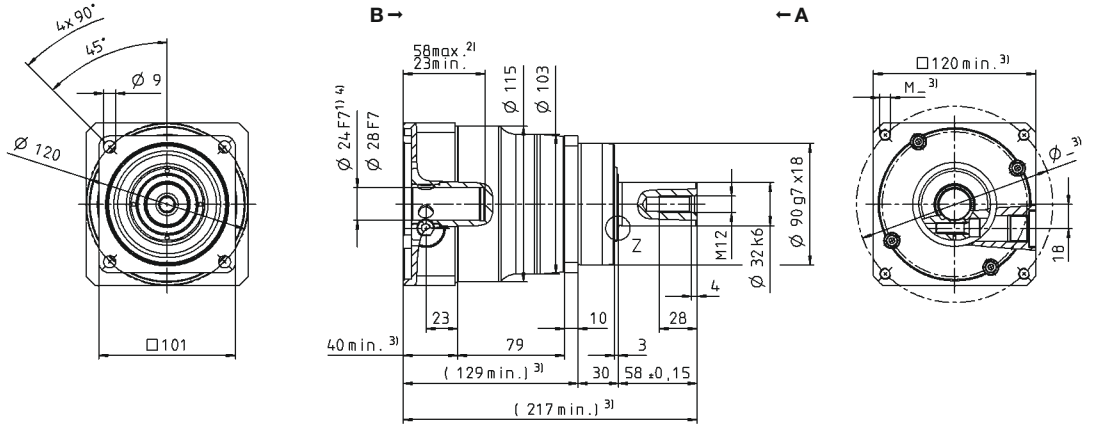

up to 38 [4] (K) clamping hub diameter

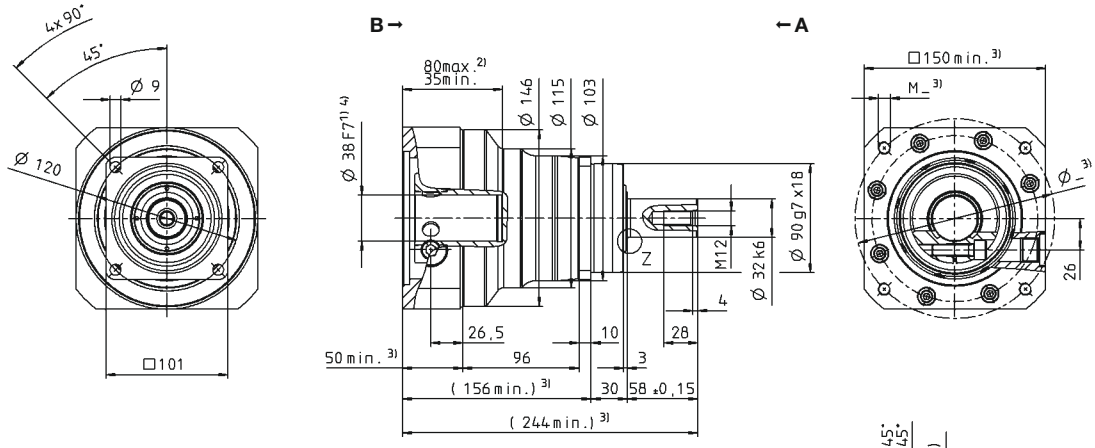

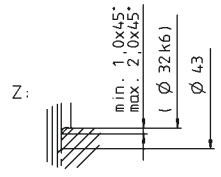

Other output variants

Shaft with key

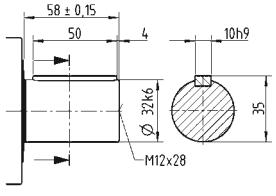

Splined shaft (DIN 5480)

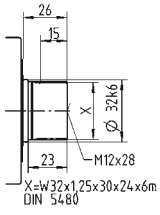

Shaft mounted

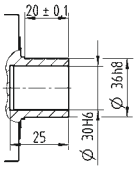

Non-tolerated dimensions are nominal dimensions
1) Check motor shaft fit
2) Min./Max. permissible motor shaft length. Longer motor shafts are possible, please contact alpha.
3) The dimensions depend on the motor
4) Smaller motor shaft diameter is compensated by a bushing with a minimum thickness of 1 mm
5) Standard clamping hub diameter

				2-stage										
Ratio			*i*		**16**	**20**	**25**	**28**	**32**	**35**	**40**	**50**	**64**	**70**	**100**
Max. torque [a) b) e)]			T_{2a}	*Nm*	347	347	347	347	347	347	347	347	259	347	259
				in.lb	3067	3067	3067	3067	3067	3067	3067	3067	2288	3067	2288
Max. acceleration torque [b) e)] (max. 1000 cycles per hour)			T_{2B}	*Nm*	347	347	347	347	347	347	347	347	259	347	259
				in.lb	3067	3067	3067	3067	3067	3067	3067	3067	2288	3067	2288
Nominal torque (at n_{1N})			T_{2N}	*Nm*	243	259	257	277	243	277	277	277	207	277	207
				in.lb	2146	2295	2277	2453	2153	2453	2453	2453	1830	2453	1830
Emergency stop torque [a) b) e)] (permitted 1000 times during the service life of the gearbox)			T_{2Not}	*Nm*	625	625	625	625	625	625	625	625	625	625	625
				in.lb	5532	5532	5532	5532	5532	5532	5532	5532	5532	5532	5532
Permitted average input speed (at T_{2N} and 20 °C ambient temperature) [d)]			n_{1N}	*rpm*	3100	3100	3100	3100	3100	3100	3100	3500	3500	4200	4200
Max. input speed			n_{1Max}	*rpm*	6500	6500	6500	6500	6500	6500	6500	6500	6500	6500	6500
Mean no load running torque [b)] (at n_1 = 3000 rpm and 20 °C gearbox temperature)			T_{012}	*Nm*	1.0	0.93	0.85	0.77	0.86	0.54	0.54	0.46	0.46	0.39	0.37
				in.lb	9.2	8.2	7.5	6.8	7.6	4.8	4.8	4.1	4.1	3.5	3.3
Max. backlash			j_t	*arcmin*	Standard ≤ 5 / Reduced ≤ 3										
Torsional rigidity [b)]			C_{t21}	*Nm/arcmin*	31										
				in.lb/arcmin	274										
Max. axial force [c)]			F_{2AMax}	*N*	5650										
				lb_f	1271										
Max. lateral force [c)]			F_{2QMax}	*N*	6600										
				lb_f	1485										
Max. tilting moment			M_{2KMax}	*Nm*	487										
				in.lb	4310										
Efficiency at full load			η	%	94										
Service life			L_h	*h*	> 20000										
Weight (incl. standard adapter plate)			*m*	*kg*	7.9										
				lb_m	17.5										
Operating noise (at reference ratio and reference speed – ratio-specific values available in cymex®)			L_{PA}	*dB(A)*	≤ 56										
Max. permitted housing temperature				*°C*	+90										
				F	194										
Ambient temperature				*°C*	–15 to +40										
				F	5 to 104										
Lubrication					Lubricated for life										
Direction of rotation					In- and output same direction										
Protection class					IP 65										
Metal bellows coupling (recommended product type – validate sizing with cymex®)					BC2-00300AA032.000-X										
Bore diameter of coupling on the application side				*mm*	X = 024.000 - 060.000										
Mass moment of inertia (relates to the drive) Clamping hub diameter [mm] Optimized mass inertia version available on request	C	14	J_1	$kgcm^2$	0.64	0.54	0.52	0.43	0.43	0.43	0.38	0.38	0.54	0.37	0.37
				10^{-3} *in.lb.s²*	0.57	0.48	0.46	0.38	0.38	0.38	0.34	0.34	0.48	0.33	0.33
	E	19	J_1	$kgcm^2$	0.81	0.70	0.68	0.60	0.43	0.59	0.55	0.54	0.38	0.54	0.54
				10^{-3} *in.lb.s²*	0.72	0.62	0.60	0.53	0.38	0.52	0.49	0.48	0.34	0.48	0.48
	G	24	J_1	$kgcm^2$	2.18	2.07	2.05	1.97	1.97	1.96	1.92	1.91	1.91	1.91	1.91
				10^{-3} *in.lb.s²*	1.93	1.83	1.81	1.74	1.74	1.73	1.70	1.69	1.69	1.69	1.69
	H	28	J_1	$kgcm^2$	1.98	1.90	1.88	1.81	1.81	1.80	1.76	1.75	1.75	1.75	1.75
				10^{-3} *in.lb.s²*	1.75	1.68	1.66	1.60	1.60	1.59	1.56	1.55	1.55	1.55	1.55

Please use our sizing software cymex® for a detailed sizing – **www.wittenstein-cymex.com**

[a)] At max. 10 % F_{2QMax}
[b)] Valid for standard clamping hub diameter
[c)] Refers to center of the output shaft or flange
[d)] Please reduce input speed at higher ambient temperatures
[e)] Smooth shaft

View A | View B

2-stage

Motor shaft diameter [mm]

up to 14 [4] (C) clamping hub diameter

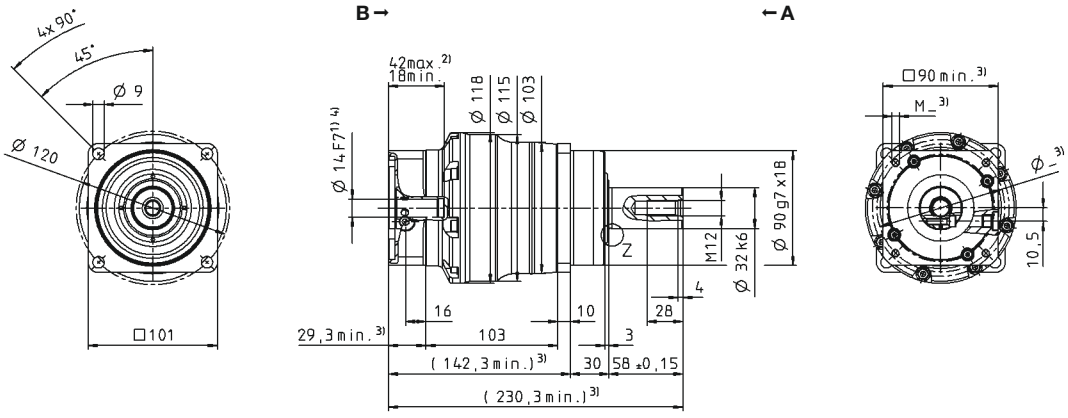

up to 19 [4] (E) [5] clamping hub diameter

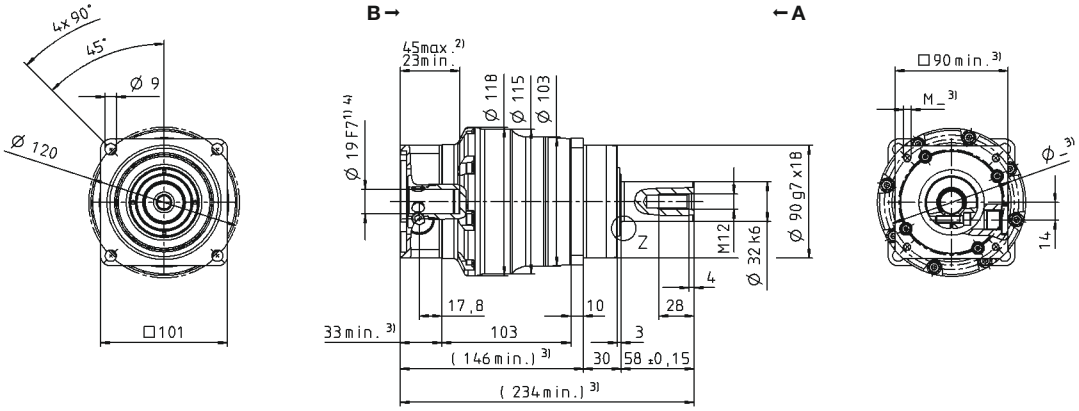

up to 24/28 [4] (G/H) clamping hub diameter

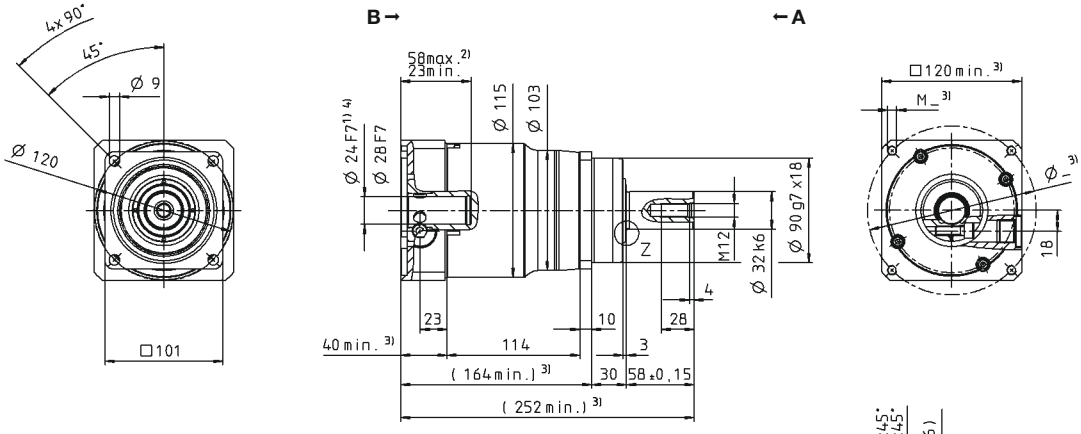

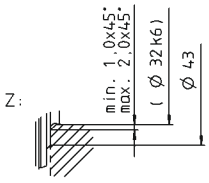

Other output variants

Shaft with key

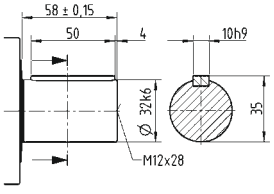

Splined shaft (DIN 5480)

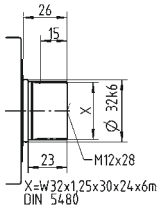

Shaft mounted

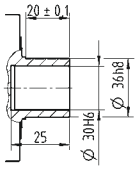

Non-tolerated dimensions are nominal dimensions

1) Check motor shaft fit
2) Min./Max. permissible motor shaft length. Longer motor shafts are possible, please contact alpha.
3) The dimensions depend on the motor
4) Smaller motor shaft diameter is compensated by a bushing with a minimum thickness of 1 mm
5) Standard clamping hub diameter

SP+ 140 MF 1-stage

				1-stage					
Ratio			*i*	**3**	**4**	**5**	**7**	**8**	**10**
Max. torque [a) b) e)]			T_{2a}	*Nm*	624	1056	1056	825	720	720
				in.lb	5523	9346	9346	7302	6373	6373
Max. acceleration torque [b) e)] (max. 1000 cycles per hour)			T_{2B}	*Nm*	468	792	792	792	636	636
				in.lb	4142	7010	7010	7010	5629	5629
Nominal torque (at n_{1N})			T_{2N}	*Nm*	202	335	333	319	312	327
				in.lb	1786	2962	2944	2820	2763	2894
Emergency stop torque [a) b) e)] (permitted 1000 times during the service life of the gearbox)			T_{2Not}	*Nm*	1250	1350	1350	1350	1250	1250
				in.lb	11064	11949	11949	11949	11064	11064
Permitted average input speed (at T_{2N} and 20 °C ambient temperature) [d)]			n_{1N}	*rpm*	2100	2100	2100	2600	2600	2600
Max. input speed			n_{1Max}	*rpm*	5000	5000	5000	5000	5000	5000
Mean no load running torque [b)] (at n_1 = 3000 rpm and 20 °C gearbox temperature)			T_{012}	*Nm*	6.7	5.4	4.4	2.8	2.5	2.2
				in.lb	60	47	39	25	23	19
Max. backlash			j_t	*arcmin*	Standard ≤ 3 / Reduced ≤ 1					
Torsional rigidity [b)]			C_{t21}	*Nm/arcmin*	53					
				in.lb/arcmin	469					
Max. axial force [c)]			F_{2AMax}	*N*	9870					
				lb_f	2221					
Max. lateral force [c)]			F_{2QMax}	*N*	9900					
				lb_f	2228					
Max. tilting moment			M_{2KMax}	*Nm*	952					
				in.lb	8426					
Efficiency at full load			η	*%*	97					
Service life			L_h	*h*	> 20000					
Weight (incl. standard adapter plate)			*m*	*kg*	17.2					
				lb_m	38					
Operating noise (at reference ratio and reference speed – ratio-specific values available in cymex®)			L_{PA}	*dB(A)*	≤ 59					
Max. permitted housing temperature				*°C*	+90					
				F	194					
Ambient temperature				*°C*	–15 to +40					
				F	5 to 104					
Lubrication					Lubricated for life					
Direction of rotation					In- and output same direction					
Protection class					IP 65					
Metal bellows coupling (recommended product type – validate sizing with cymex®)					BC2-00800AA040.000-X					
Bore diameter of coupling on the application side				*mm*	X = 040.000 - 075.000					
Mass moment of inertia (relates to the drive) Clamping hub diameter [mm] Optimized mass inertia version available on request	G	24	J_1	$kgcm^2$	10.7	7.82	6.79	5.84	5.28	5.28
				10^{-3} $in.lb.s^2$	9.47	6.92	6.01	5.17	4.67	4.67
	I	32	J_1	$kgcm^2$	13.8	11.0	9.95	9.00	8.44	8.44
				10^{-3} $in.lb.s^2$	12.2	9.74	8.81	7.97	7.47	7.47
	K	38	J_1	$kgcm^2$	14.9	12.1	11.0	10.1	9.51	9.51
				10^{-3} $in.lb.s^2$	13.2	10.7	9.74	8.94	8.42	8.42
	M	48	J_1	$kgcm^2$	29.5	26.7	25.6	24.7	24.2	24.2
				10^{-3} $in.lb.s^2$	26.1	23.6	22.7	21.9	21.4	21.4

Please use our sizing software cymex® for a detailed sizing – **www.wittenstein-cymex.com**

a) At max. 10 % F_{2QMax}
b) Valid for standard clamping hub diameter
c) Refers to center of the output shaft or flange
d) Please reduce input speed at higher ambient temperatures
e) Smooth shaft

View A | View B

1-stage

Motor shaft diameter [mm]

up to 24 [4] (G) clamping hub diameter

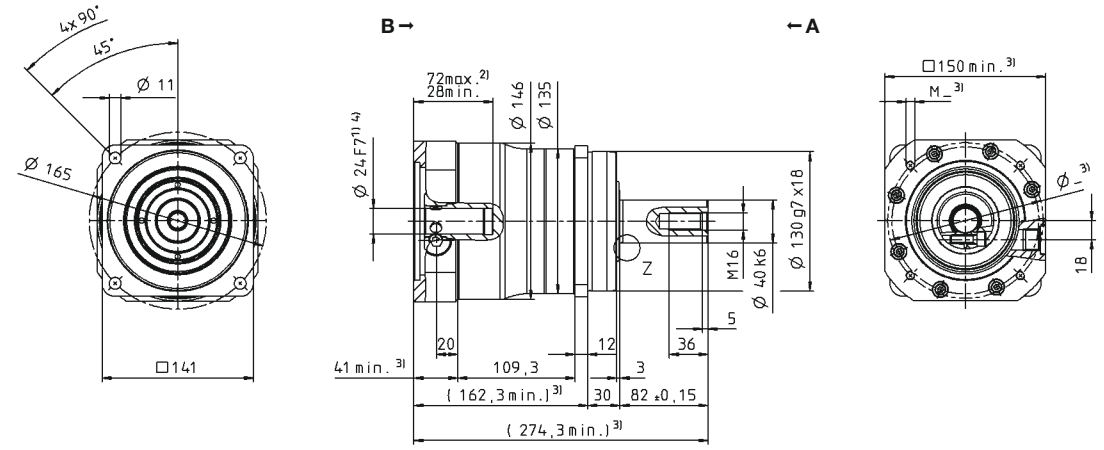

up to 32/38 [4] (I/K[5]) clamping hub diameter

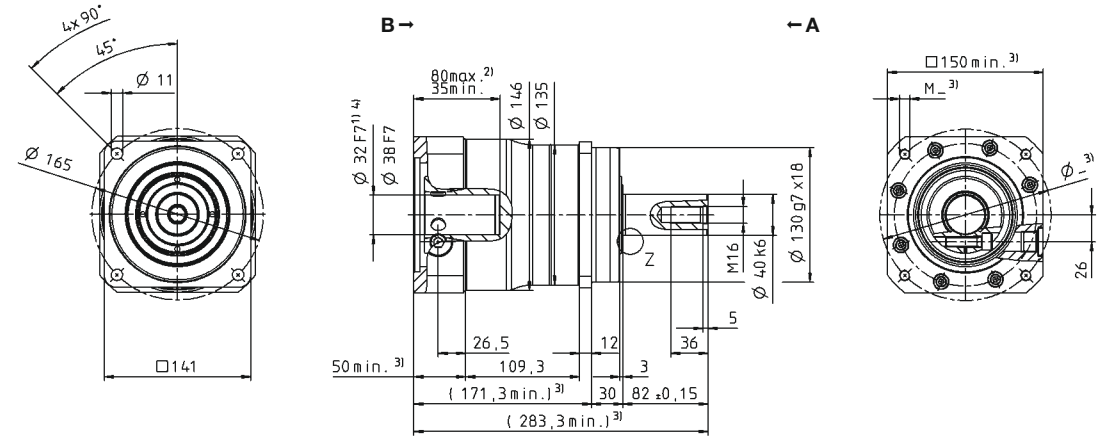

up to 48 [4] (M) clamping hub diameter

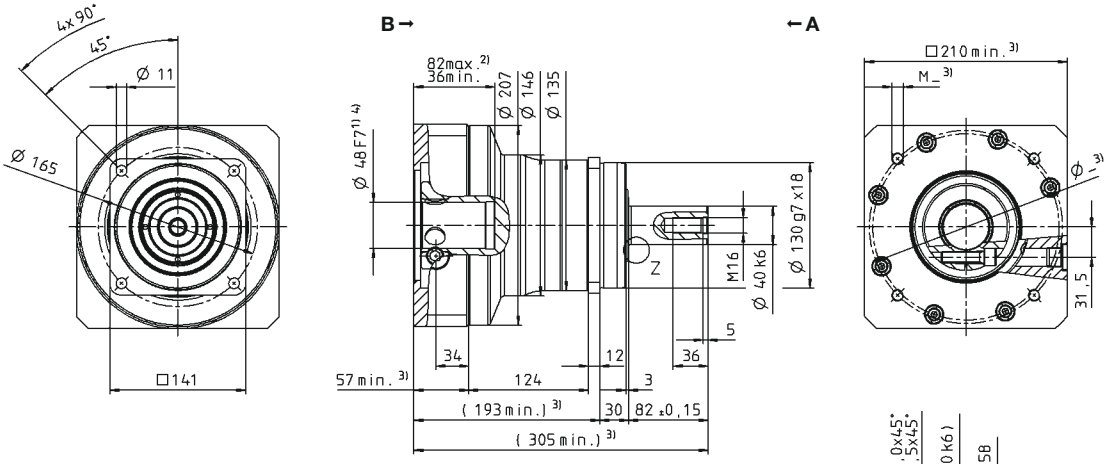

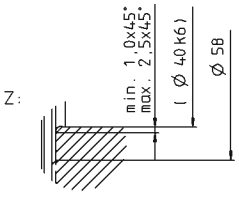

Other output variants

Shaft with key

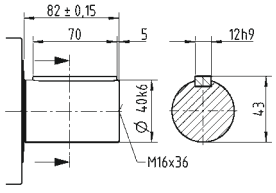

Splined shaft (DIN 5480)

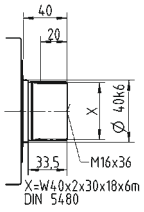

Shaft mounted

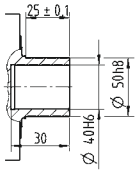

Non-tolerated dimensions are nominal dimensions

1) Check motor shaft fit
2) Min./Max. permissible motor shaft length. Longer motor shafts are possible, please contact alpha.
3) The dimensions depend on the motor
4) Smaller motor shaft diameter is compensated by a bushing with a minimum thickness of 1 mm
5) Standard clamping hub diameter

				2-stage										
Ratio			*i*	**16**	**20**	**25**	**28**	**32**	**35**	**40**	**50**	**64**	**70**	**100**
Max. torque [a) b) e)]			T_{2a}	*Nm*	726	726	670	726	726	670	726	670	583	726	583
				in.lb	6426	6426	5934	6426	6426	5934	6426	5934	5160	6426	5160
Max. acceleration torque [b) e)] (max. 1000 cycles per hour)			T_{2B}	*Nm*	726	726	670	726	726	670	726	670	583	726	583
				in.lb	6426	6426	5934	6426	6426	5934	6426	5930	5164	6426	5160
Nominal torque (at n_{1N})			T_{2N}	*Nm*	461	493	489	545	464	536	581	536	466	581	466
				in.lb	4078	4361	4332	4824	4104	4747	5141	4747	4128	5141	4128
Emergency stop torque [a) b) e)] (permitted 1000 times during the service life of the gearbox)			T_{2Not}	*Nm*	1350	1350	1350	1350	1350	1350	1350	1350	1350	1350	1250
				in.lb	11949	11949	11949	11949	11949	11949	11949	11949	11949	11949	11064
Permitted average input speed (at T_{2N} and 20 °C ambient temperature) [d)]			n_{1N}	*rpm*	2900	2900	2900	2900	2900	2900	2900	3200	3200	3200	3900
Max. input speed			n_{1Max}	*rpm*	6000	6000	6000	6000	6000	6000	6000	6000	6000	6000	6000
Mean no load running torque [b)] (at n_1 = 3000 rpm and 20 °C gearbox temperature)			T_{012}	*Nm*	2.4	2.1	2.0	1.8	1.6	1.2	1.2	1.1	1.1	0.88	0.80
				in.lb	21	19	17	16	14	11	11	9.4	9.4	7.8	7.1
Max. backlash			j_t	*arcmin*	Standard ≤ 5 / Reduced ≤ 3										
Torsional rigidity [b)]			C_{t21}	*Nm/arcmin*	53										
				in.lb/arcmin	469										
Max. axial force [c)]			F_{2AMax}	*N*	9870										
				lb_f	2221										
Max. lateral force [c)]			F_{2QMax}	*N*	9900										
				lb_f	2228										
Max. tilting moment			M_{2KMax}	*Nm*	952										
				in.lb	8426										
Efficiency at full load			η	%	94										
Service life			L_h	*h*	> 20000										
Weight (incl. standard adapter plate)			*m*	*kg*	17										
				lb_m	37.6										
Operating noise (at reference ratio and reference speed – ratio-specific values available in cymex®)			L_{PA}	*dB(A)*	≤ 59										
Max. permitted housing temperature				*°C*	+90										
				F	194										
Ambient temperature				*°C*	–15 to +40										
				F	5 to 104										
Lubrication					Lubricated for life										
Direction of rotation					In- and output same direction										
Protection class					IP 65										
Metal bellows coupling (recommended product type – validate sizing with cymex®)					BC2-00800AA040.000-X										
Bore diameter of coupling on the application side				*mm*	X = 040.000 - 075.000										
Mass moment of inertia (relates to the drive) Clamping hub diameter [mm] Optimized mass inertia version available on request	E	19	J_1	$kgcm^2$	2.50	2.01	1.97	1.65	1.65	1.63	1.40	1.39	1.39	1.38	1.38
				10^{-3} $in.lb.s^2$	2.21	1.78	1.74	1.46	1.46	1.44	1.24	1.23	1.23	1.22	1.22
	G	24	J_1	$kgcm^2$	3.19	2.71	2.67	2.34	2.34	2.32	2.10	2.08	2.08	2.08	2.07
				10^{-3} $in.lb.s^2$	2.82	2.40	2.36	2.07	2.07	2.05	1.86	1.84	1.84	1.84	1.83
	K	38	J_1	$kgcm^2$	10.3	9.77	9.73	9.41	9.41	9.39	9.16	9.15	9.15	9.14	9.14
				10^{-3} $in.lb.s^2$	9.07	8.65	8.61	8.33	8.33	8.31	8.11	8.10	8.10	8.09	8.09

Please use our sizing software cymex® for a detailed sizing – **www.wittenstein-cymex.com**

a) At max. 10 % F_{2QMax}
b) Valid for standard clamping hub diameter
c) Refers to center of the output shaft or flange
d) Please reduce input speed at higher ambient temperatures
e) Smooth shaft

View A | View B

2-stage

Motor shaft diameter [mm]

up to 19 [4] (E) clamping hub diameter

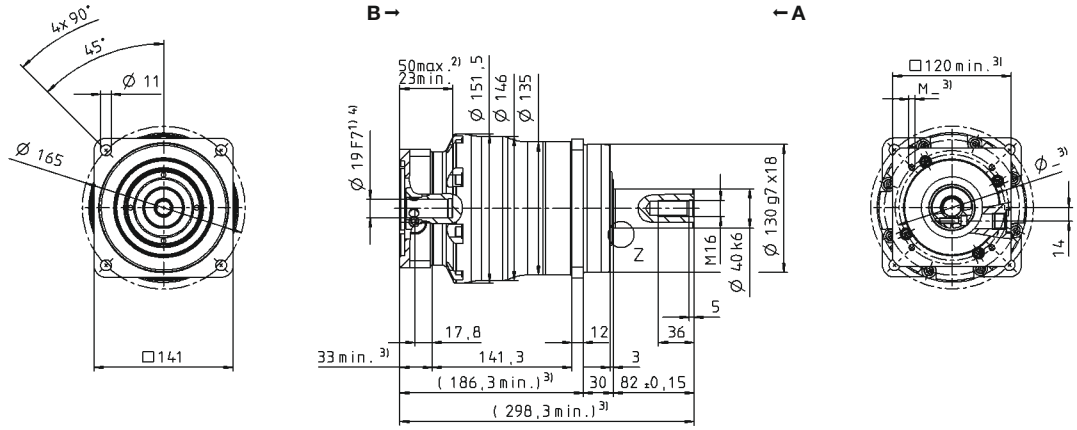

up to 24 [4] (G) [5] clamping hub diameter

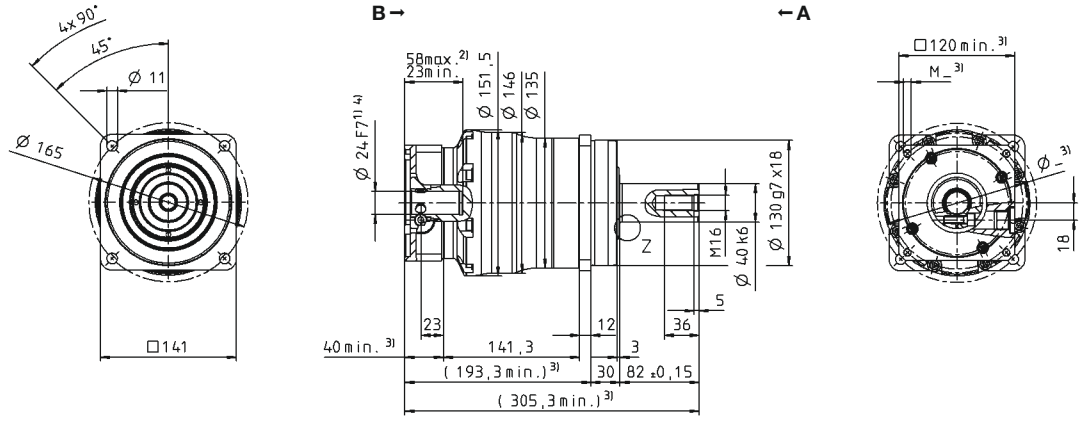

up to 38 [4] (K) clamping hub diameter

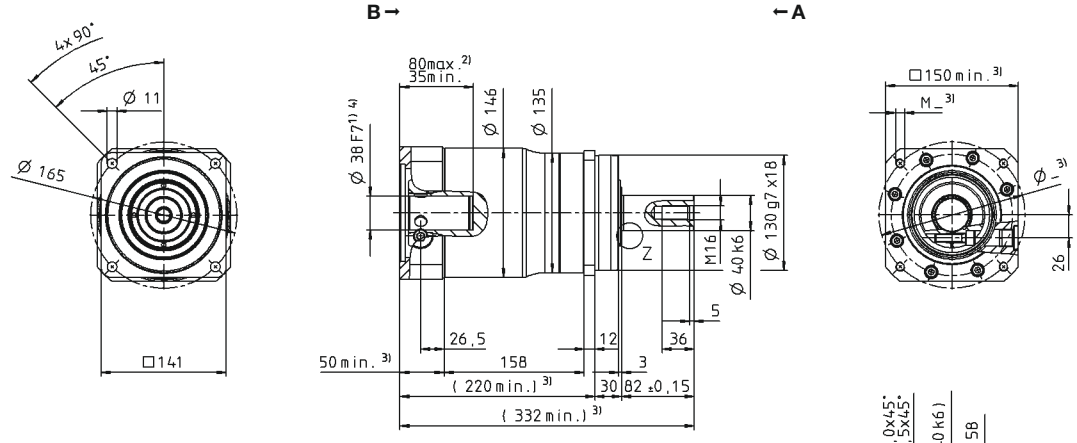

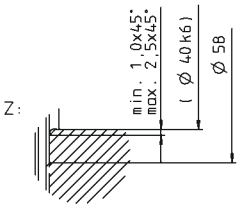

Other output variants

Shaft with key

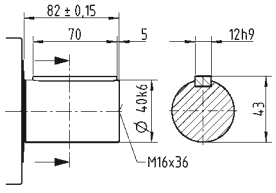

Splined shaft (DIN 5480)

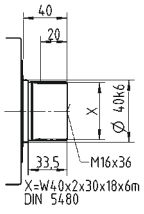

Shaft mounted

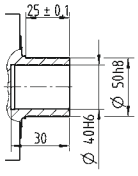

Non-tolerated dimensions are nominal dimensions

1) Check motor shaft fit
2) Min./Max. permissible motor shaft length. Longer motor shafts are possible, please contact alpha.
3) The dimensions depend on the motor
4) Smaller motor shaft diameter is compensated by a bushing with a minimum thickness of 1 mm
5) Standard clamping hub diameter

				1-stage					
Ratio			*i*		**3**	**4**	**5**	**7**	**8**	**10**
Max. torque [a) b) e)]			T_{2a}	*Nm*	1552	1936	1936	1936	1552	1552
				in.lb	13736	17135	17135	17135	13736	13736
Max. acceleration torque [b) e)] (max. 1000 cycles per hour)			T_{2B}	*Nm*	1164	1452	1452	1452	1164	1164
				in.lb	10302	12851	12851	12851	10302	10302
Nominal torque (at n_{1N})			T_{2N}	*Nm*	513	927	919	825	825	864
				in.lb	4544	8203	8134	7305	7305	7644
Emergency stop torque [a) b) e)] (permitted 1000 times during the service life of the gearbox)			T_{2Not}	*Nm*	2750	2750	2750	2750	2750	2750
				in.lb	24340	24340	24340	24340	24340	24340
Permitted average input speed (at T_{2N} and 20 °C ambient temperature) [d)]			n_{1N}	*rpm*	1500	1500	1500	2300	2300	2300
Max. input speed			n_{1Max}	*rpm*	4500	4500	4500	4500	4500	4500
Mean no load running torque [b)] (at n_1 = 3000 rpm and 20 °C gearbox temperature)			T_{012}	*Nm*	15	12	8.0	5.6	5.6	3.8
				in.lb	135	103	71	50	50	34
Max. backlash			j_t	*arcmin*	Standard ≤ 3 / Reduced ≤ 1					
Torsional rigidity [b)]			C_{t21}	*Nm/arcmin*	175					
				in.lb/arcmin	1549					
Max. axial force [c)]			F_{2AMax}	*N*	15570					
				lb_f	3503					
Max. lateral force [c)]			F_{2QMax}	*N*	15400					
				lb_f	3465					
Max. tilting moment			M_{2KMax}	*Nm*	1600					
				in.lb	14161					
Efficiency at full load			η	%	97					
Service life			L_h	*h*	> 20000					
Weight (incl. standard adapter plate)			*m*	*kg*	34					
				lb_m	75.1					
Operating noise (at reference ratio and reference speed – ratio-specific values available in cymex®)			L_{PA}	*dB(A)*	≤ 62					
Max. permitted housing temperature				*°C*	+90					
				F	194					
Ambient temperature				*°C*	–15 to +40					
				F	5 to 104					
Lubrication					Lubricated for life					
Direction of rotation					In- and output same direction					
Protection class					IP 65					
Metal bellows coupling (recommended product type – validate sizing with cymex®)					BC2-01500AA055.000-X					
Bore diameter of coupling on the application side				*mm*	X = 050.000 - 080.000					
Mass moment of inertia (relates to the drive) Clamping hub diameter [mm] Optimized mass inertia version available on request	K	38	J_1	$kgcm^2$	50.8	33.9	27.9	22.2	22.2	19.2
				10^{-3} $in.lb.s^2$	45.0	30.0	24.7	19.7	19.7	17.0
	M	48	J_1	$kgcm^2$	58.2	41.2	35.3	29.6	29.6	26.5
				10^{-3} $in.lb.s^2$	51.5	36.5	31.2	26.2	26.2	23.5
	N	55	J_1	$kgcm^2$	65.7	49.7	44.0	38.5	38.5	35.4
				10^{-3} $in.lb.s^2$	58.1	44.0	38.9	34.1	34.1	31.3

Please use our sizing software cymex® for a detailed sizing – **www.wittenstein-cymex.com**

[a)] At max. 10 % F_{2QMax}
[b)] Valid for standard clamping hub diameter
[c)] Refers to center of the output shaft or flange
[d)] Please reduce input speed at higher ambient temperatures
[e)] Smooth shaft

View A | View B

1-stage

Motor shaft diameter [mm]

up to 38 [4] (K) clamping hub diameter

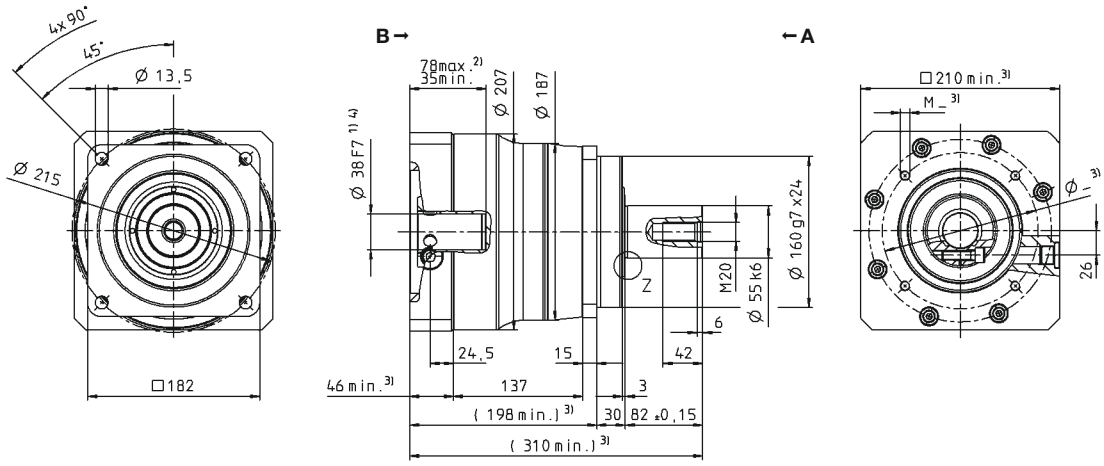

up to 48 [4] (M) [5] clamping hub diameter

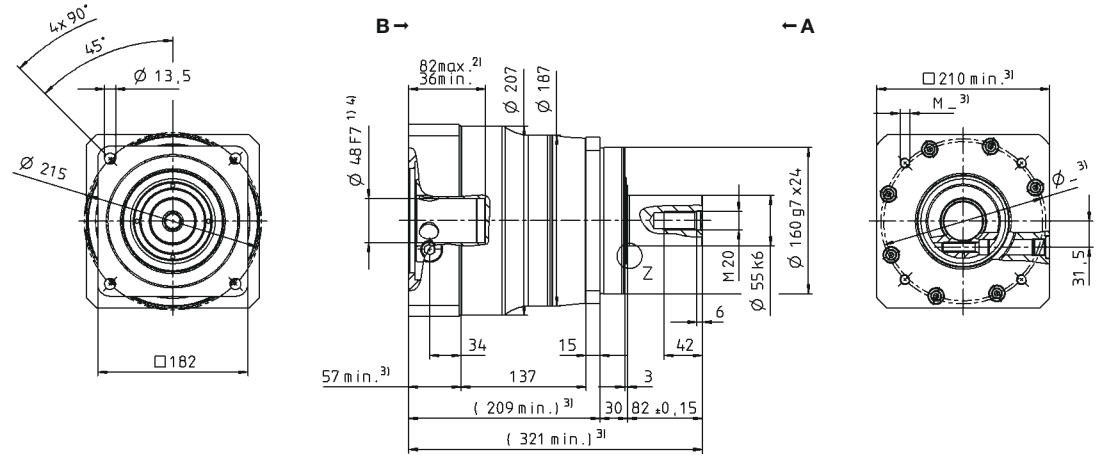

up to 55 [4] (N) [5] clamping hub diameter

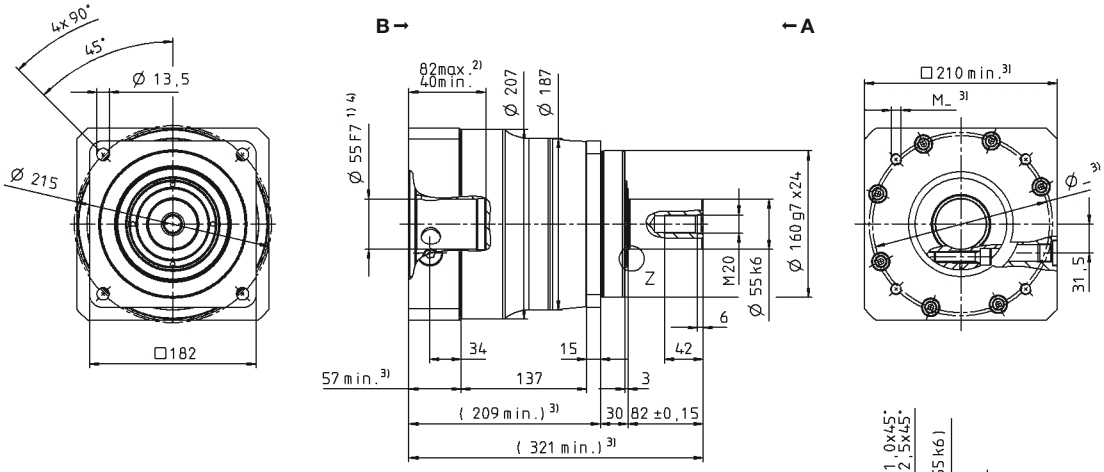

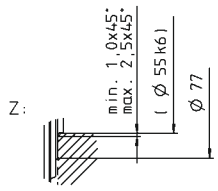

Other output variants

Shaft with key

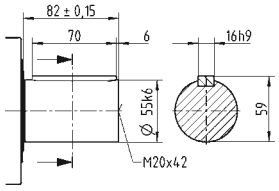

Splined shaft (DIN 5480)

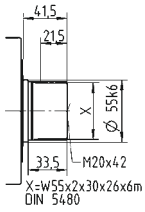

Shaft mounted

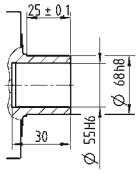

Non-tolerated dimensions are nominal dimensions

1) Check motor shaft fit
2) Min./Max. permissible motor shaft length. Longer motor shafts are possible, please contact alpha.
3) The dimensions depend on the motor
4) Smaller motor shaft diameter is compensated by a bushing with a minimum thickness of 1 mm
5) Standard clamping hub diameter

SP+ 180 MF 2-stage

				2-stage										
Ratio			i	**16**	**20**	**25**	**28**	**32**	**35**	**40**	**50**	**64**	**70**	**100**
Max. torque [a) b) e)]			T_{2a}	*Nm*	1485	1485	1857	1485	1485	1857	1485	1857	1238	1356	1238
				in.lb	13146	13146	16432	13146	13146	16432	13146	16432	10955	12000	10955
Max. acceleration torque [b) e)] (max. 1000 cycles per hour)			T_{2B}	*Nm*	1452	1452	1452	1452	1452	1452	1452	1452	1164	1356	1164
				in.lb	12851	12851	12851	12851	12851	12851	12851	12851	10302	12002	10302
Nominal torque (at n_{1N})			T_{2N}	*Nm*	1162	1162	1162	1162	1162	1162	1162	1162	931	1085	931
				in.lb	10281	10281	10281	10281	10281	10281	10281	10281	8242	9600	8242
Emergency stop torque [a) b) e)] (permitted 1000 times during the service life of the gearbox)			T_{2Not}	*Nm*	2750	2750	2750	2750	2750	2750	2750	2750	2750	2750	2750
				in.lb	24340	24340	24340	24340	24340	24340	24340	24340	24340	24340	24340
Permitted average input speed (at T_{2N} and 20 °C ambient temperature) [d)]			n_{1N}	*rpm*	2700	2700	2700	2700	2700	2700	2700	2900	2900	3200	3400
Max. input speed			n_{1Max}	*rpm*	5000	5000	5000	5000	5000	5000	5000	5000	5000	5000	5000
Mean no load running torque [b)] (at n_1 = 3000 rpm and 20 °C gearbox temperature)			T_{012}	*Nm*	4.7	3.9	3.6	3.3	3.3	2.8	2.2	1.9	1.9	1.8	1.8
				in.lb	42	35	32	29	29	25	20	17	17	16	16
Max. backlash			j_t	*arcmin*	Standard ≤ 5 / Reduced ≤ 3										
Torsional rigidity [b)]			C_{t21}	*Nm/arcmin*	175										
				in.lb/arcmin	1549										
Max. axial force [c)]			F_{2AMax}	*N*	15570										
				lb_f	3503										
Max. lateral force [c)]			F_{2QMax}	*N*	15400										
				lb_f	3465										
Max. tilting moment			M_{2KMax}	*Nm*	1600										
				in.lb	14161										
Efficiency at full load			η	*%*	94										
Service life			L_h	*h*	> 20000										
Weight (incl. standard adapter plate)			m	*kg*	36.4										
				lb_m	80.4										
Operating noise (at reference ratio and reference speed – ratio-specific values available in cymex®)			L_{PA}	*dB(A)*	≤ 58										
Max. permitted housing temperature				*°C*	+90										
				F	194										
Ambient temperature				*°C*	–15 to +40										
				F	5 to 104										
Lubrication					Lubricated for life										
Direction of rotation					In- and output same direction										
Protection class					IP 65										
Metal bellows coupling (recommended product type – validate sizing with cymex®)					BC2-01500AA055.000-X										
Bore diameter of coupling on the application side				*mm*	X = 050.000 - 080.000										
Mass moment of inertia (relates to the drive) Clamping hub diameter [mm] Optimized mass inertia version available on request	G	24	J_1	*kgcm²*	9.27	7.72	7.48	6.32	6.32	6.20	5.51	5.45	5.45	5.39	5.36
				10⁻³ in.lb.s²	8.20	6.83	6.62	5.59	5.59	5.49	4.88	4.82	4.82	4.77	4.74
	I	32	J_1	*kgcm²*	12.4	10.9	10.6	9.48	9.48	9.36	8.67	9.68	8.55	8.55	8.52
				10⁻³ in.lb.s²	11.0	9.63	9.42	8.39	8.39	8.28	7.67	8.57	7.57	7.57	7.54
	K	38	J_1	*kgcm²*	13.5	12.0	11.7	10.6	10.6	10.4	9.74	9.68	9.68	9.63	9.60
				10⁻³ in.lb.s²	12.0	10.6	10.4	9.34	9.34	9.23	8.62	8.57	8.57	8.52	8.50
	M	48	J_1	*kgcm²*	28.1	26.6	26.3	25.2	25.2	25.1	24.4	24.3	24.3	24.3	24.3
				10⁻³ in.lb.s²	24.9	23.5	23.3	22.3	22.3	22.2	21.6	21.5	21.5	21.5	21.5

Please use our sizing software cymex® for a detailed sizing – **www.wittenstein-cymex.com**

[a)] At max. 10 % F_{2QMax}
[b)] Valid for standard clamping hub diameter
[c)] Refers to center of the output shaft or flange
[d)] Please reduce input speed at higher ambient temperatures
[e)] Smooth shaft

View A | View B

2-stage

Motor shaft diameter [mm]

up to 24 [4] (G) clamping hub diameter

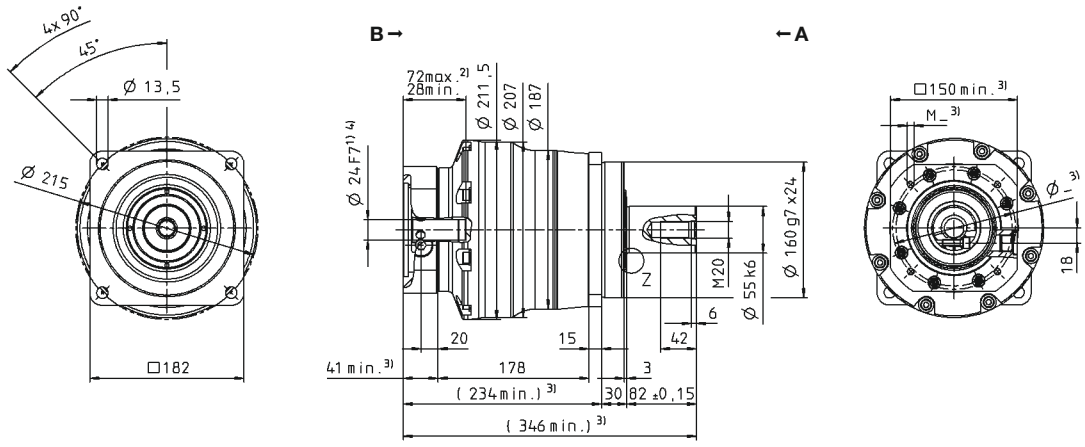

up to 32/38 [4] (I/K[5]) clamping hub diameter

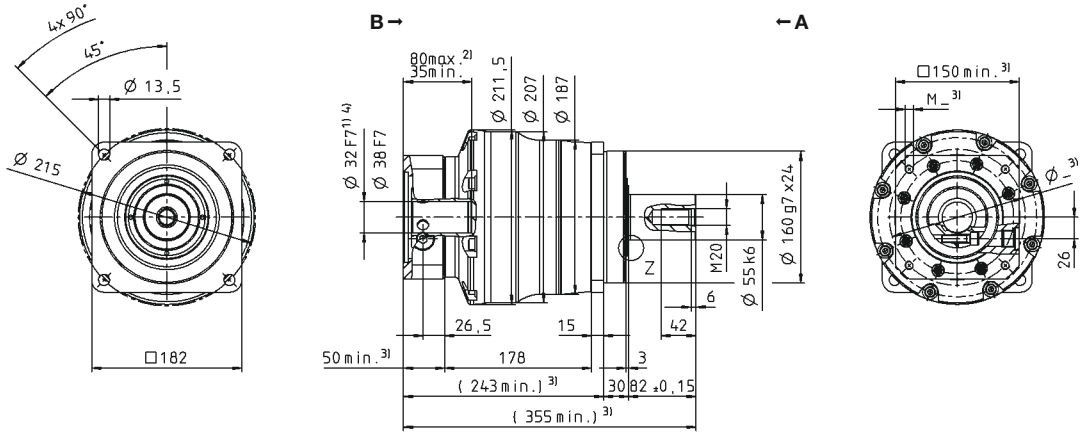

up to 48 [4] (M) clamping hub diameter

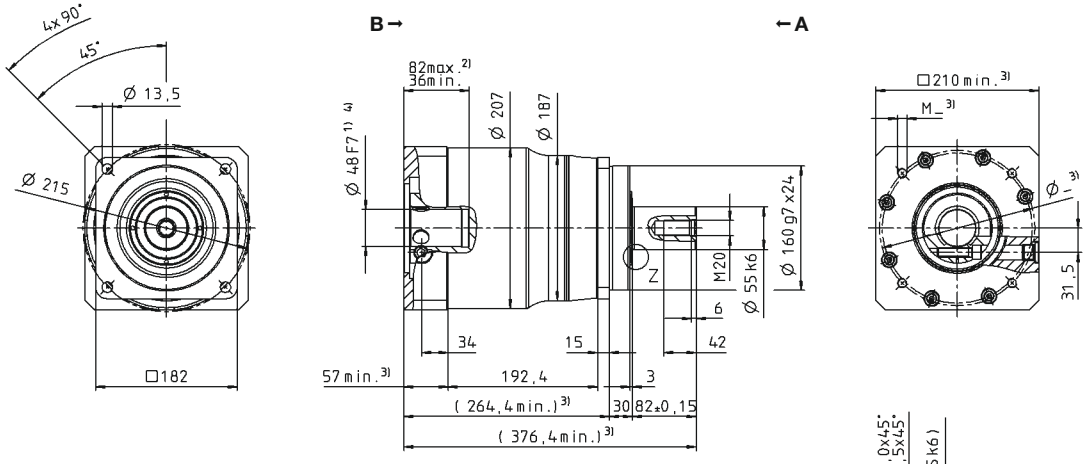

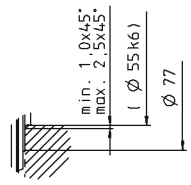

Other output variants

Shaft with key

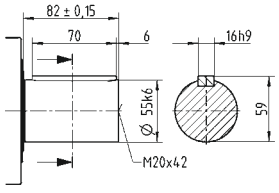

Splined shaft (DIN 5480)

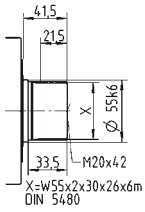

Shaft mounted

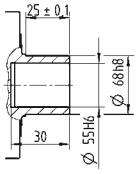

Non-tolerated dimensions are nominal dimensions
1) Check motor shaft fit
2) Min./Max. permissible motor shaft length. Longer motor shafts are possible, please contact alpha.
3) The dimensions depend on the motor
4) Smaller motor shaft diameter is compensated by a bushing with a minimum thickness of 1 mm
5) Standard clamping hub diameter

SP+ 210 MF 1-stage

				1-stage					
Ratio			*i*	**3**	**4**	**5**	**7**	**8**	**10**
Max. torque [a) b) e)]			T_{2a}	*Nm*	2560	4000	4000	3840	2800	2800
				in.lb	22658	35403	35403	33987	24782	24782
Max. acceleration torque [b) e)] (max. 1000 cycles per hour)			T_{2B}	*Nm*	1920	3000	3000	2880	2280	2280
				in.lb	16994	26552	26552	25490	20180	20180
Nominal torque (at n_{1N})			T_{2N}	*Nm*	1536	1895	1767	1731	1631	1708
				in.lb	13595	16772	15641	15323	14432	15122
Emergency stop torque [a) b) e)] (permitted 1000 times during the service life of the gearbox)			T_{2Not}	*Nm*	5900	5900	5900	5900	5900	5900
				in.lb	52220	52220	52220	52220	52220	52220
Permitted average input speed (at T_{2N} and 20 °C ambient temperature) [d)]			n_{1N}	*rpm*	1200	1200	1500	1700	2000	2000
Max. input speed			n_{1Max}	*rpm*	3000	3000	3000	3000	3000	3000
Mean no load running torque [b)] (at n_1 = 2000 rpm and 20 °C gearbox temperature)			T_{012}	*Nm*	26	19	15	8.8	8.8	6.4
				in.lb	227	164	129	78	78	57
Max. backlash			j_t	*arcmin*	Standard ≤ 3 / Reduced ≤ 1					
Torsional rigidity [b)]			C_{t21}	*Nm/arcmin*	400					
				in.lb/arcmin	3540					
Max. axial force [c)]			F_{2AMax}	*N*	30000					
				lb_f	6750					
Max. lateral force [c)]			F_{2QMax}	*N*	21000					
				lb_f	4725					
Max. tilting moment			M_{2KMax}	*Nm*	3100					
				in.lb	27437					
Efficiency at full load			η	*%*	97					
Service life			L_h	*h*	> 20000					
Weight (incl. standard adapter plate)			*m*	*kg*	56					
				lb_m	123.8					
Operating noise (at reference ratio and reference speed – ratio-specific values available in cymex®)			L_{PA}	*dB(A)*	≤ 64					
Max. permitted housing temperature				*°C*	+90					
				F	194					
Ambient temperature				*°C*	–15 to +40					
				F	5 to 104					
Lubrication					Lubricated for life					
Direction of rotation					In- and output same direction					
Protection class					IP 65					
Metal bellows coupling (recommended product type – validate sizing with cymex®)					BC2-04000AA075.000-X					
Bore diameter of coupling on the application side				*mm*	X = 050.000 - 090.000					
Mass moment of inertia (relates to the drive) Clamping hub diameter [mm] Optimized mass inertia version available on request	N	55	J_1	$kgcm^2$	139	94.3	76.9	61.5	61.5	53.1
				10^{-3} $in.lb.s^2$	123	83.5	68.1	54.4	54.4	47.0

Please use our sizing software cymex® for a detailed sizing – **www.wittenstein-cymex.com**

[a)] At max. 10 % F_{2QMax}
[b)] Valid for standard clamping hub diameter
[c)] Refers to center of the output shaft or flange
[d)] Please reduce input speed at higher ambient temperatures
[e)] Smooth shaft

View A

View B

Motor shaft diameter [mm]

1-stage

up to 55 [4] (N) [5]
clamping hub diameter

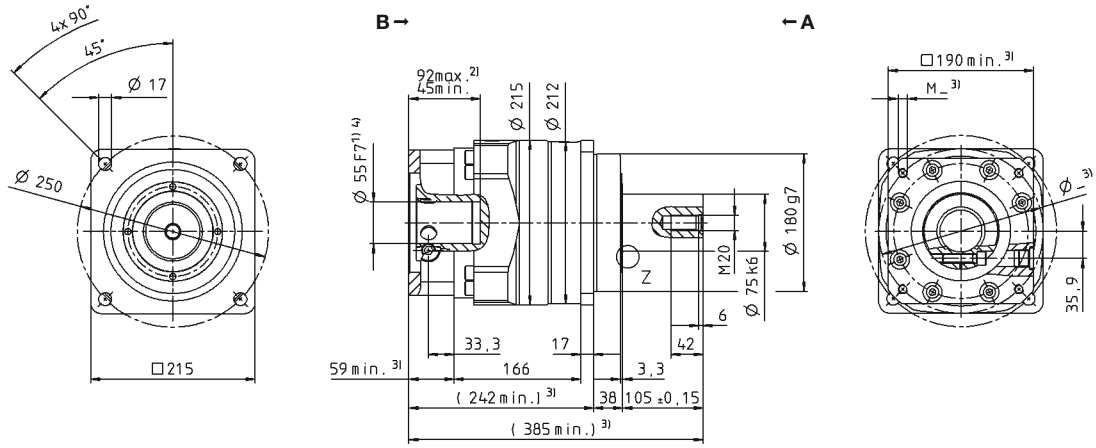

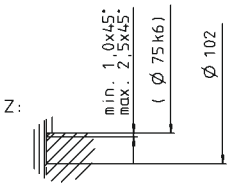

Other output variants

Shaft with key

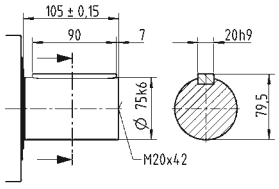

Splined shaft (DIN 5480)

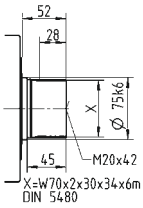

Non-tolerated dimensions are nominal dimensions

1) Check motor shaft fit
2) Min./Max. permissible motor shaft length. Longer motor shafts are possible, please contact alpha.
3) The dimensions depend on the motor
4) Smaller motor shaft diameter is compensated by a bushing with a minimum thickness of 1 mm
5) Standard clamping hub diameter

SP+ 210 MF 2-stage

			2-stage										
Ratio	*i*		**16**	**20**	**25**	**28**	**32**	**35**	**40**	**50**	**64**	**70**	**100**
Max. torque [a) b) e)]	T_{2a}	*Nm*	3159	3159	3949	3159	3159	3840	2880	3600	2043	2457	2043
		in.lb	27958	27958	34947	27958	27958	33987	25490	31863	18081	21745	18081
Max. acceleration torque [b) e)] (max. 1000 cycles per hour)	T_{2B}	*Nm*	2880	3000	3000	2880	2880	2880	2840	2880	2043	2457	2043
		in.lb	25490	26552	26552	25490	25490	25490	25136	25490	18081	21745	18081
Nominal torque (at n_{1N})	T_{2N}	*Nm*	1274	1266	1567	1294	2200	1599	1358	1679	1634	1965	1634
		in.lb	11277	11205	13873	11452	19474	14150	12019	14861	14465	17396	14465
Emergency stop torque [a) b) e)] (permitted 1000 times during the service life of the gearbox)	T_{2Not}	*Nm*	5900	5900	5900	5900	5900	5900	5900	5900	5900	5900	5900
		in.lb	52220	52220	52220	52220	52220	52220	52220	52220	52220	52220	52220
Permitted average input speed (at T_{2N} and 20 °C ambient temperature) [d)]	n_{1N}	*rpm*	2500	2500	2500	2500	2500	2500	2500	2500	2500	3000	3000
Max. input speed	n_{1Max}	*rpm*	4500	4500	4500	4500	4500	4500	4500	4500	4500	4500	4500
Mean no load running torque [b)] (at n_1 = 2000 rpm and 20 °C gearbox temperature)	T_{012}	*Nm*	5.6	5.2	4.8	4.5	4.5	3.6	3.4	3.0	3.0	2.6	2.4
		in.lb	50	46	43	39	39	32	30	27	27	23	21
Max. backlash	j_t	*arcmin*	Standard ≤ 5 / Reduced ≤ 3										
Torsional rigidity [b)]	C_{t21}	*Nm/arcmin*	400										
		in.lb/arcmin	3540										
Max. axial force [c)]	F_{2AMax}	*N*	30000										
		lb_f	6750										
Max. lateral force [c)]	F_{2QMax}	*N*	21000										
		lb_f	4725										
Max. tilting moment	M_{2KMax}	*Nm*	3100										
		in.lb	27437										
Efficiency at full load	η	*%*	94										
Service life	L_h	*h*	> 20000										
Weight (incl. standard adapter plate)	*m*	*kg*	53										
		lb_m	117										
Operating noise (at reference ratio and reference speed – ratio-specific values available in cymex®)	L_{PA}	*dB(A)*	≤ 57										
Max. permitted housing temperature		*°C*	+90										
		F	194										
Ambient temperature		*°C*	–15 to +40										
		F	5 to 104										
Lubrication			Lubricated for life										
Direction of rotation			In- and output same direction										
Protection class			IP 65										
Metal bellows coupling (recommended product type – validate sizing with cymex®)			BC2-04000AA075.000-X										
Bore diameter of coupling on the application side		*mm*	X = 050.000 - 090.000										
Mass moment of inertia (relates to the drive) **Clamping hub diameter [mm]** **Optimized mass inertia version available on request** — M 48	J_1	$kgcm^2$	34.5	31.5	30.8	30.0	30.0	29.7	28.5	28.3	28.3	28.1	28.0
		10^{-3} $in.lb.s^2$	30.5	27.9	27.3	26.6	26.6	26.3	25.2	25.0	25.0	24.9	24.8

Please use our sizing software cymex® for a detailed sizing – **www.wittenstein-cymex.com**

a) At max. 10 % F_{2QMax}
b) Valid for standard clamping hub diameter
c) Refers to center of the output shaft or flange
d) Please reduce input speed at higher ambient temperatures
e) Smooth shaft

View A

View B

Motor shaft diameter [mm]

2-stage

up to 48 [4] (M) [5] clamping hub diameter

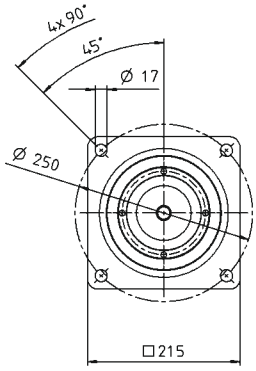

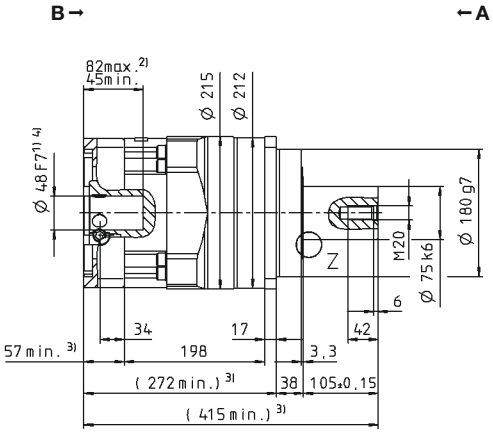

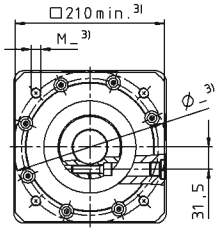

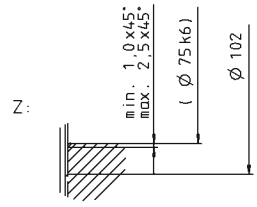

Other output variants

Shaft with key

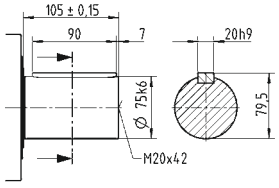

Splined shaft (DIN 5480)

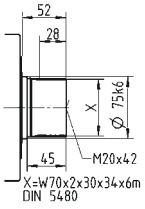

Non-tolerated dimensions are nominal dimensions

1) Check motor shaft fit
2) Min./Max. permissible motor shaft length. Longer motor shafts are possible, please contact alpha.
3) The dimensions depend on the motor
4) Smaller motor shaft diameter is compensated by a bushing with a minimum thickness of 1 mm
5) Standard clamping hub diameter

SP+ 240 MF 1-stage

				1-stage					
Ratio			*i*	**3**	**4**	**5**	**7**	**8**	**10**
Max. torque [a) b) e)]			T_{2a}	*Nm*	4400	5700	5700	5700	4000	4000
				in.lb	38944	50450	50450	50450	35403	35403
Max. acceleration torque [b) e)] (max. 1000 cycles per hour)			T_{2B}	*Nm*	3300	5400	5400	5160	4000	4000
				in.lb	29208	47794	47794	45670	35403	35403
Nominal torque (at n_{1N})			T_{2N}	*Nm*	2333	3038	2872	2737	2611	2735
				in.lb	20651	26885	25418	24223	23111	24208
Emergency stop torque [a) b) e)] (permitted 1000 times during the service life of the gearbox)			T_{2Not}	*Nm*	6850	8500	8500	8500	6850	6850
				in.lb	60628	75232	75232	75232	60628	60628
Permitted average input speed (at T_{2N} and 20 °C ambient temperature) [d)]			n_{1N}	*rpm*	1000	1000	1200	1500	1700	1700
Max. input speed			n_{1Max}	*rpm*	3000	3000	3000	3000	3000	3000
Mean no load running torque [b)] (at n_1 = 2000 rpm and 20 °C gearbox temperature)			T_{012}	*Nm*	32	24	19	12	12	8.0
				in.lb	283	212	164	106	106	71
Max. backlash			j_t	*arcmin*	Standard ≤ 3 / Reduced ≤ 1					
Torsional rigidity [b)]			C_{t21}	*Nm/arcmin*	550					
				in.lb/arcmin	4868					
Max. axial force [c)]			F_{2AMax}	*N*	33000					
				lb_f	7425					
Max. lateral force [c)]			F_{2QMax}	*N*	30000					
				lb_f	6750					
Max. tilting moment			M_{2KMax}	*Nm*	5000					
				in.lb	44254					
Efficiency at full load			η	*%*	97					
Service life			L_h	*h*	> 20000					
Weight (incl. standard adapter plate)			*m*	*kg*	77					
				lb_m	170.2					
Operating noise (at reference ratio and reference speed – ratio-specific values available in cymex®)			L_{PA}	*dB(A)*	≤ 66					
Max. permitted housing temperature				*°C*	+90					
				F	194					
Ambient temperature				*°C*	–15 to +40					
				F	5 to 104					
Lubrication					Lubricated for life					
Direction of rotation					In- and output same direction					
Protection class					IP 65					
Metal bellows coupling (recommended product type – validate sizing with cymex®)					BC2-06000AA085.000-X					
Bore diameter of coupling on the application side				*mm*	X = 060.000 - 140.000					
Mass moment of inertia (relates to the drive) Clamping hub diameter [mm] Optimized mass inertia version available on request	O	60	J_1	$kgcm^2$	260	198	163	138	138	125
				10^{-3} $in.lb.s^2$	230	175	144	122	122	110

Please use our sizing software cymex® for a detailed sizing – **www.wittenstein-cymex.com**

[a)] At max. 10 % F_{2QMax}
[b)] Valid for standard clamping hub diameter
[c)] Refers to center of the output shaft or flange
[d)] Please reduce input speed at higher ambient temperatures
[e)] Smooth shaft

View A | View B

Motor shaft diameter [mm]

1-stage

up to 60 [4] (O) [5] clamping hub diameter

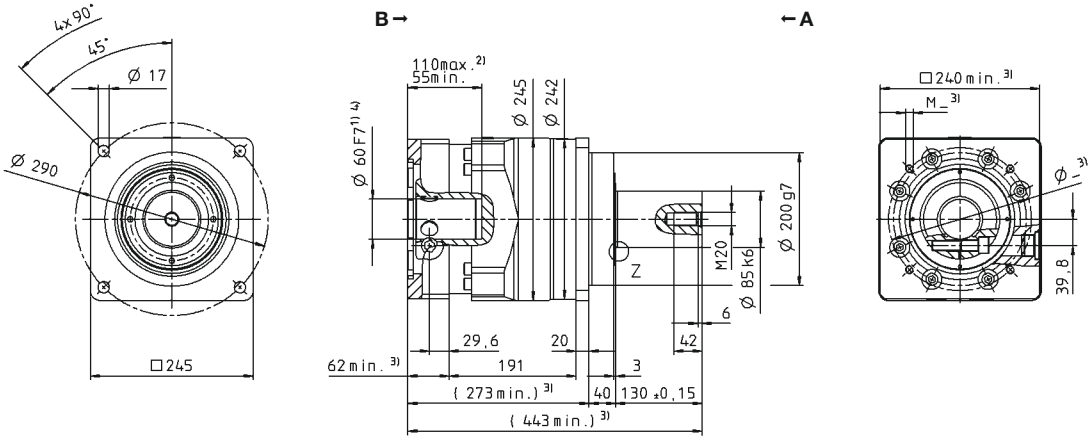

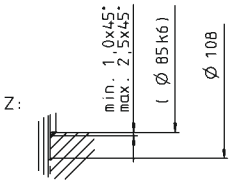

Other output variants

Shaft with key

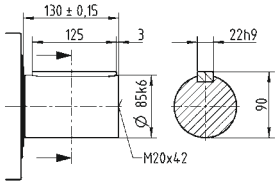

Splined shaft (DIN 5480)

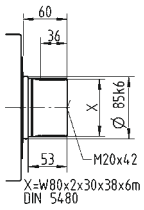

Non-tolerated dimensions are nominal dimensions

1) Check motor shaft fit
2) Min./Max. permissible motor shaft length. Longer motor shafts are possible, please contact alpha.
3) The dimensions depend on the motor
4) Smaller motor shaft diameter is compensated by a bushing with a minimum thickness of 1 mm
5) Standard clamping hub diameter

SP+ 240 MF 2-stage

			2-stage										
Ratio	*i*		**16**	**20**	**25**	**28**	**32**	**35**	**40**	**50**	**64**	**70**	**100**
Max. torque [a) b) e)]	T_{2a}	*Nm*	5446	5446	5700	5446	5446	5700	5446	5700	3642	5700	3642
		in.lb	48202	48202	50450	48202	48202	50450	48202	50450	32236	50450	32236
Max. acceleration torque [b) e)] (max. 1000 cycles per hour)	T_{2B}	*Nm*	5400	5400	5400	5400	5400	5400	4400	5160	3642	4730	3642
		in.lb	47794	47794	47794	47794	47794	47794	38944	45670	32236	41864	32236
Nominal torque (at n_{1N})	T_{2N}	*Nm*	2658	2596	3198	2667	3754	3283	2803	3457	2914	3784	2914
		in.lb	23524	22976	28308	23607	33222	29060	24811	30600	25789	33491	25789
Emergency stop torque [a) b) e)] (permitted 1000 times during the service life of the gearbox)	T_{2Not}	*Nm*	8500	8500	8500	8500	8500	8500	8500	8500	6850	8500	6850
		in.lb	75232	75232	75232	75232	75232	75232	75232	75232	60628	75232	60628
Permitted average input speed (at T_{2N} and 20 °C ambient temperature) [d)]	n_{1N}	*rpm*	2300	2500	2500	2500	2500	2500	2500	2500	2500	2800	2800
Max. input speed	n_{1Max}	*rpm*	4500	4500	4500	4500	4500	4500	4500	4500	4500	4500	4500
Mean no load running torque [b)] (at n_1 = 2000 rpm and 20 °C gearbox temperature)	T_{012}	*Nm*	8.4	7.1	6.5	5.9	5.9	4.5	4.1	3.5	3.5	3.0	3.0
		in.lb	74	63	58	52	52	40	36	31	31	26	26
Max. backlash	j_t	*arcmin*	Standard ≤ 5 / Reduced ≤ 3										
Torsional rigidity [b)]	C_{t21}	*Nm/arcmin*	550										
		in.lb/arcmin	4868										
Max. axial force [c)]	F_{2AMax}	*N*	33000										
		lb_f	7425										
Max. lateral force [c)]	F_{2QMax}	*N*	30000										
		lb_f	6750										
Max. tilting moment	M_{2KMax}	*Nm*	5000										
		in.lb	44254										
Efficiency at full load	η	*%*	94										
Service life	L_h	*h*	> 20000										
Weight (incl. standard adapter plate)	*m*	*kg*	76										
		lb_m	168										
Operating noise (at reference ratio and reference speed – ratio-specific values available in cymex®)	L_{PA}	*dB(A)*	≤ 58										
Max. permitted housing temperature		*°C*	+90										
		F	194										
Ambient temperature		*°C*	–15 to +40										
		F	5 to 104										
Lubrication			Lubricated for life										
Direction of rotation			In- and output same direction										
Protection class			IP 65										
Metal bellows coupling (recommended product type – validate sizing with cymex®)			BC2-06000AA085.000-X										
Bore diameter of coupling on the application side		*mm*	X = 060.000 - 140.000										
Mass moment of inertia (relates to the drive) **Clamping hub diameter [mm]** **Optimized mass inertia version available on request** — M 48	J_1	$kgcm^2$	39.2	34.6	33.2	30.5	30.5	29.7	28.2	27.9	27.6	27.6	27.5
		10^{-3} $in.lb.s^2$	34.7	30.6	29.4	27.0	27.0	26.3	25.0	24.7	24.4	24.4	24.3

Please use our sizing software cymex® for a detailed sizing – **www.wittenstein-cymex.com**

[a)] At max. 10 % F_{2QMax}
[b)] Valid for standard clamping hub diameter
[c)] Refers to center of the output shaft or flange
[d)] Please reduce input speed at higher ambient temperatures
[e)] Smooth shaft

View A

View B

Motor shaft diameter [mm]

2-stage

up to 48 [4] (M) [5] clamping hub diameter

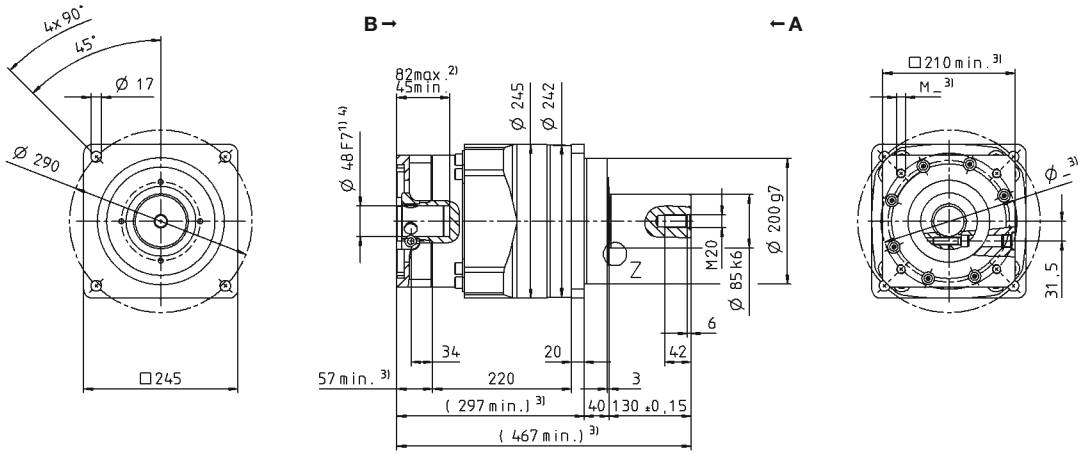

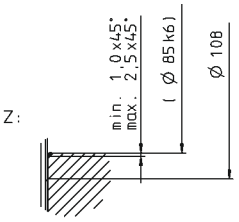

Other output variants

Shaft with key

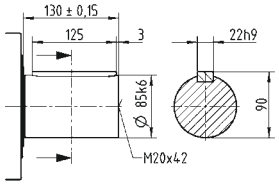

Splined shaft (DIN 5480)

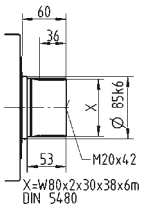

Non-tolerated dimensions are nominal dimensions

[1] Check motor shaft fit

[2] Min./Max. permissible motor shaft length. Longer motor shafts are possible, please contact alpha.

[3] The dimensions depend on the motor

[4] Smaller motor shaft diameter is compensated by a bushing with a minimum thickness of 1 mm

[5] Standard clamping hub diameter

				1-stage					
Ratio			*i*	**3**	**4**	**5**	**7**	**8**	**10**
Max. torque [a) b) e)]			T_{2a}	*Nm*	68	90	90	90	70	70
				in.lb	602	797	797	797	620	620
Max. acceleration torque [b) e)] (max. 1000 cycles per hour)			T_{2B}	*Nm*	68	90	90	90	70	70
				in.lb	602	797	797	797	620	620
Nominal torque (at n_{1N})			T_{2N}	*Nm*	41	51	51	52	50	53
				in.lb	362	448	447	459	441	468
Emergency stop torque [a) b) e)] (permitted 1000 times during the service life of the gearbox)			T_{2Not}	*Nm*	139	185	250	250	213	213
				in.lb	1230	1640	2213	2213	1885	1885
Permitted average input speed (at T_{2N} and 20 °C ambient temperature) [d)]			n_{1N}	*rpm*	4500	4500	4500	4500	4500	4500
Max. input speed			n_{1Max}	*rpm*	6000	6000	6000	6000	6000	6000
Mean no load running torque [b)] (at n_1 = 3000 rpm and 20 °C gearbox temperature)			T_{012}	*Nm*	1.1	0.88	0.72	0.49	0.42	0.40
				in.lb	9.9	7.8	6.4	4.3	3.7	3.5
Max. backlash			j_t	*arcmin*	Standard ≤ 6 / Reduced ≤ 4					
Torsional rigidity [b)]			C_{t21}	*Nm/arcmin*	10					
				in.lb/arcmin	89					
Max. axial force [c)]			F_{2AMax}	*N*	3350					
				lb_f	754					
Max. lateral force [c)]			F_{2QMax}	*N*	4200					
				lb_f	945					
Max. tilting moment			M_{2KMax}	*Nm*	236					
				in.lb	2089					
Efficiency at full load			η	*%*	98.5					
Service life			L_h	*h*	> 30000					
Weight (incl. standard adapter plate)			*m*	*kg*	3.9					
				lb_m	8.6					
Operating noise (at reference ratio and reference speed – ratio-specific values available in cymex®)			L_{PA}	*dB(A)*	≤ 59					
Max. permitted housing temperature				*°C*	+90					
				F	194					
Ambient temperature				*°C*	–15 to +40					
				F	5 to 104					
Lubrication					Lubricated for life					
Direction of rotation					In- and output same direction					
Protection class					IP 65					
Metal bellows coupling (recommended product type – validate sizing with cymex®)					BC2-00080AA022.000-X					
Bore diameter of coupling on the application side				*mm*	X = 014.000 - 042.000					
Mass moment of inertia (relates to the drive) Clamping hub diameter [mm]	E	19	J_1	$kgcm^2$	1.03	0.78	0.68	0.59	0.54	0.54
				10^{-3} $in.lb.s^2$	0.91	0.69	0.60	0.52	0.48	0.48
	G	24	J_1	$kgcm^2$	2.40	2.15	2.05	1.96	1.91	1.91
				10^{-3} $in.lb.s^2$	2.12	1.90	1.81	1.73	1.69	1.69

Please use our sizing software cymex® for a detailed sizing – **www.wittenstein-cymex.com**

a) At max. 10 % F_{2QMax}
b) Valid for standard clamping hub diameter
c) Refers to center of the output shaft or flange
d) Please reduce input speed at higher ambient temperatures
e) Smooth shaft

View A View B

1-stage

Motor shaft diameter [mm]

up to 19 [4] (E) [5] clamping hub diameter

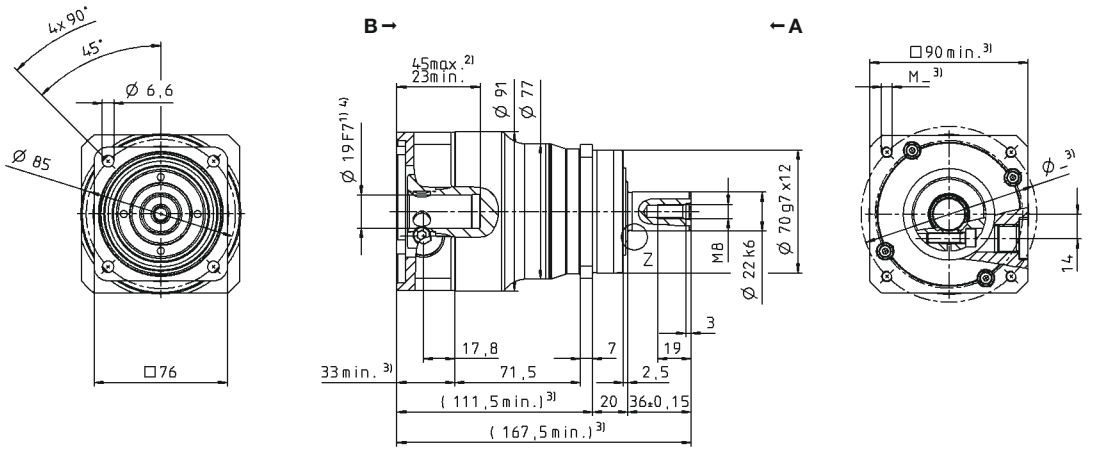

up to 24 [4] (G) clamping hub diameter

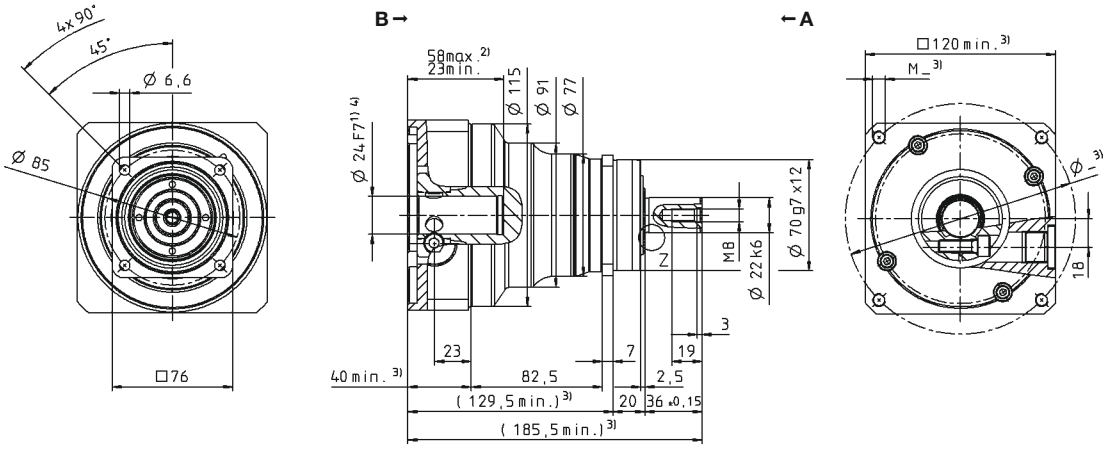

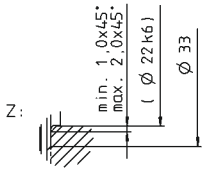

Other output variants

Shaft with key

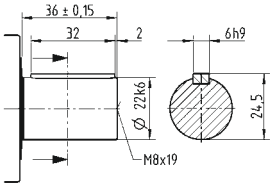

Splined shaft (DIN 5480)

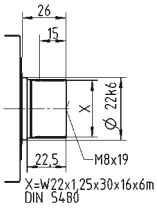

Shaft mounted

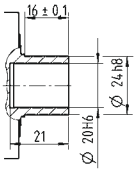

Non-tolerated dimensions are nominal dimensions
1) Check motor shaft fit
2) Min./Max. permissible motor shaft length. Longer motor shafts are possible, please contact alpha.
3) The dimensions depend on the motor
4) Smaller motor shaft diameter is compensated by a bushing with a minimum thickness of 1 mm
5) Standard clamping hub diameter

SP+ 075 MC 2-stage

				2-stage										
Ratio			i	**16**	**20**	**25**	**28**	**32**	**35**	**40**	**50**	**64**	**70**	**100**
Max. torque [a) b) e)]			T_{2a}	Nm	90	90	90	90	90	90	90	90	70	90	70
				in.lb	797	797	797	797	797	797	797	797	620	797	620
Max. acceleration torque [b) e)] (max. 1000 cycles per hour)			T_{2B}	Nm	90	90	90	90	90	90	90	90	70	90	70
				in.lb	797	797	797	797	797	797	797	797	620	797	620
Nominal torque (at n_{1N})			T_{2N}	Nm	62	62	72	65	72	72	65	72	56	72	56
				in.lb	552	553	637	572	637	637	574	637	496	637	496
Emergency stop torque [a) b) e)] (permitted 1000 times during the service life of the gearbox)			T_{2Not}	Nm	250	250	250	250	250	250	250	250	213	250	213
				in.lb	2213	2213	2213	2213	2213	2213	2213	2213	1885	2213	1885
Permitted average input speed (at T_{2N} and 20 °C ambient temperature) [d)]			n_{1N}	rpm	4500	4500	4500	4500	4500	4500	4500	4500	4500	4500	4500
Max. input speed			n_{1Max}	rpm	6000	6000	6000	6000	6000	6000	6000	6000	6000	6000	6000
Mean no load running torque [b)] (at n_1 = 3000 rpm and 20 °C gearbox temperature)			T_{012}	Nm	0.36	0.24	0.18	0.18	0.17	0.16	0.16	0.16	0.16	0.15	0.14
				in.lb	3.2	2.1	1.6	1.6	1.5	1.4	1.4	1.4	1.4	1.3	1.2
Max. backlash			j_t	arcmin	Standard ≤ 8 / Reduced ≤ 6										
Torsional rigidity [b)]			C_{t21}	Nm/arcmin	10										
				in.lb/arcmin	89										
Max. axial force [c)]			F_{2AMax}	N	3350										
				lb_f	754										
Max. lateral force [c)]			F_{2QMax}	N	4200										
				lb_f	945										
Max. tilting moment			M_{2KMax}	Nm	236										
				in.lb	2089										
Efficiency at full load			η	%	96.5										
Service life			L_h	h	> 30000										
Weight (incl. standard adapter plate)			m	kg	3.6										
				lb_m	8.0										
Operating noise (at reference ratio and reference speed – ratio-specific values available in cymex®)			L_{PA}	dB(A)	≤ 55										
Max. permitted housing temperature				°C	+90										
				F	194										
Ambient temperature				°C	–15 to +40										
				F	5 to 104										
Lubrication					Lubricated for life										
Direction of rotation					In- and output same direction										
Protection class					IP 65										
Metal bellows coupling (recommended product type – validate sizing with cymex®)					BC2-00080AA022.000-X										
Bore diameter of coupling on the application side				mm	X = 014.000 - 042.000										
Mass moment of inertia (relates to the drive) Clamping hub diameter [mm]	C	14	J_1	$kgcm^2$	0.23	0.20	0.20	0.18	0.18	0.18	0.16	0.16	0.16	0.16	0.16
				10^{-3} in.lb.s²	0.20	0.18	0.18	0.16	0.16	0.16	0.14	0.14	0.14	0.14	0.14
	E	19	J_1	$kgcm^2$	0.55	0.53	0.52	0.50	0.50	0.50	0.49	0.49	0.49	0.49	0.49
				10^{-3} in.lb.s²	0.49	0.47	0.46	0.44	0.44	0.44	0.43	0.43	0.43	0.43	0.43

Please use our sizing software cymex® for a detailed sizing – **www.wittenstein-cymex.com**

a) At max. 10 % F_{2QMax}
b) Valid for standard clamping hub diameter
c) Refers to center of the output shaft or flange
d) Please reduce input speed at higher ambient temperatures
e) Smooth shaft

View A | View B

2-stage

Motor shaft diameter [mm]

up to 14 [4] (C) [5] clamping hub diameter

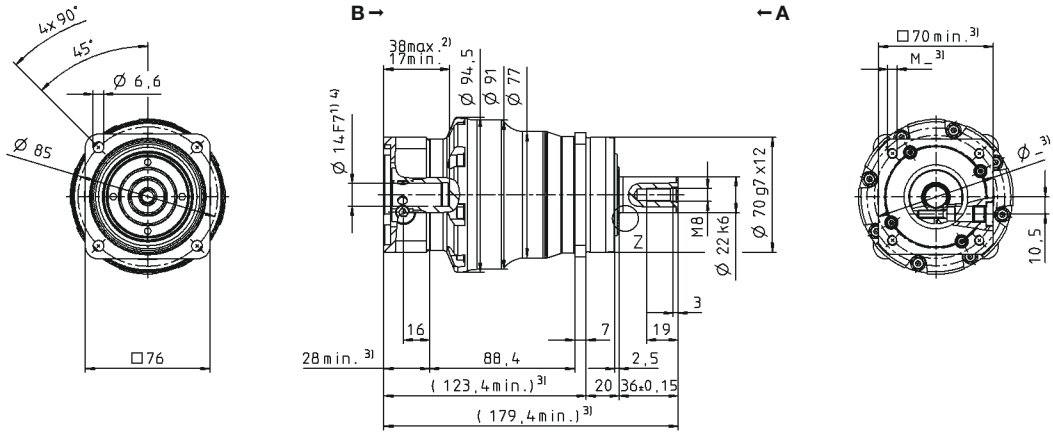

up to 19 [4] (E) clamping hub diameter

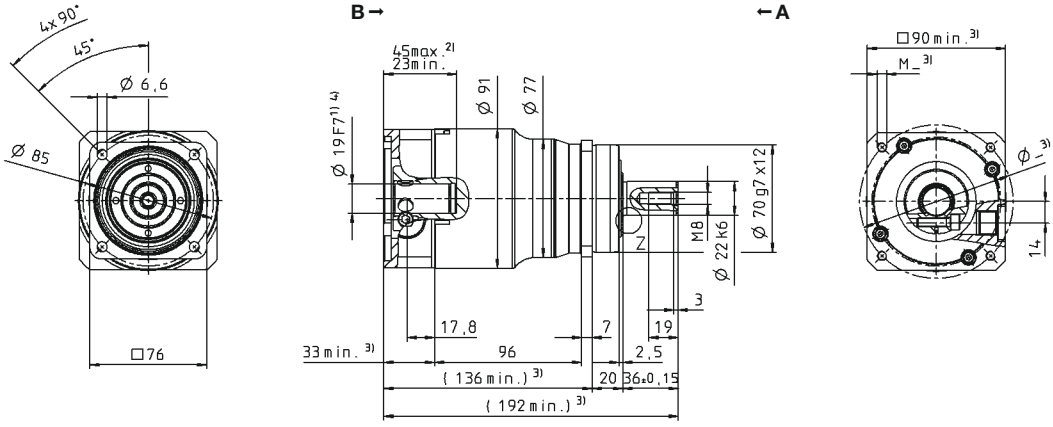

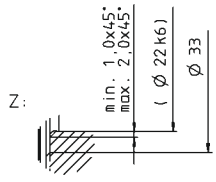

Other output variants

Shaft with key

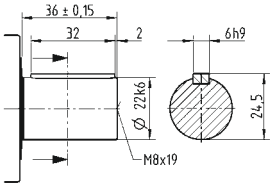

Splined shaft (DIN 5480)

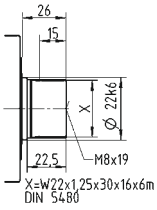

Shaft mounted

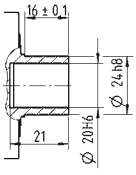

Non-tolerated dimensions are nominal dimensions

1) Check motor shaft fit
2) Min./Max. permissible motor shaft length. Longer motor shafts are possible, please contact alpha.
3) The dimensions depend on the motor
4) Smaller motor shaft diameter is compensated by a bushing with a minimum thickness of 1 mm
5) Standard clamping hub diameter

				Standard version MC						Friction optimized version L					
Ratio			*i*	**3**	**4**	**5**	**7**	**8**	**10**	**3**	**4**	**5**	**7**	**8**	**10**
Max. torque [a) b) e)]		T_{2a}	*Nm*	180	240	240	240	180	180	180	240	240	240	180	180
			in.lb	1593	2124	2124	2124	1593	1593	1593	2124	2124	2124	1593	1593
Max. acceleration torque [b) e)] (max. 1000 cycles per hour)		T_{2B}	*Nm*	180	240	240	240	180	180	180	240	240	240	180	180
			in.lb	1593	2124	2124	2124	1593	1593	1593	2124	2124	2124	1593	1593
Nominal torque (at n_{1N})		T_{2N}	*Nm*	76	95	91	93	93	97	76	95	91	93	93	97
			in.lb	677	838	806	823	821	861	677	838	806	823	821	861
Emergency stop torque [a) b) e)] (permitted 1000 times during the service life of the gearbox)		T_{2Not}	*Nm*	454	625	625	625	599	599	454	625	625	625	599	599
			in.lb	4016	5532	5532	5532	5302	5302	4016	5532	5532	5532	5302	5302
Permitted average input speed (at T_{2N} and 20 °C ambient temperature) [d)]		n_{1N}	*rpm*	3500	4000	4500	4500	4500	4500	3500	4000	4500	4500	4500	4500
Max. input speed		n_{1Max}	*rpm*	6000	6000	6000	6000	6000	6000	6000	6000	6000	6000	6000	6000
Mean no load running torque [b)] (at n_1 = 3000 rpm and 20 °C gearbox temperature)		T_{012}	*Nm*	2.0	1.8	1.4	0.84	0.78	0.64	0.9	0.8	0.6	0.5	0.4	0.4
			in.lb	17	16	12	7.4	6.9	5.7	8.0	7.1	5.3	4.4	3.5	3.5
Max. backlash		j_t	*arcmin*	Standard ≤ 4 / Reduced ≤ 2											
Torsional rigidity [b)]		C_{t21}	*Nm/arcmin*	31											
			in.lb/arcmin	274											
Max. axial force [c)]		F_{2AMax}	*N*	5650						2000					
			lb_f	1271						450					
Max. lateral force [c)]		F_{2QMax}	*N*	6600						1000					
			lb_f	1485						225					
Max. tilting moment		M_{2KMax}	*Nm*	487						72					
			in.lb	4310						637					
Efficiency at full load		η	%	98.5						99					
Service life		L_h	*h*	> 30000											
Weight (incl. standard adapter plate)		*m*	*kg*	7.7											
			lb_m	17											
Operating noise (at reference ratio and reference speed – ratio-specific values available in cymex®)		L_{PA}	*dB(A)*	≤ 58											
Max. permitted housing temperature			°C	+90											
			F	194											
Ambient temperature			°C	–15 to +40											
			F	5 to 104											
Lubrication				Lubricated for life											
Direction of rotation				In- and output same direction											
Protection class				IP 65						IP 52					
Metal bellows coupling (recommended product type – validate sizing with cymex®)				BC2-00300AA032.000-X											
Bore diameter of coupling on the application side			*mm*	X = 024.000 - 060.000											
Mass moment of inertia (relates to the drive) Clamping hub diameter [mm]	G	24	J_1 *kgcm²*	3.99	3.04	2.61	2.29	2.26	2.07	3.99	3.04	2.61	2.29	2.26	2.07
			10^{-3} *in.lb.s²*	3.53	2.69	2.31	2.03	2.00	1.83	3.53	2.69	2.31	2.03	2.00	1.83
	K	38	J_1 *kgcm²*	11.1	10.1	9.68	9.36	9.55	9.14	11.1	10.1	9.68	9.36	9.55	9.14
			10^{-3} *in.lb.s²*	9.82	8.94	8.57	8.28	8.45	8.09	9.82	8.94	8.57	8.28	8.45	8.09

Please use our sizing software cymex® for a detailed sizing – **www.wittenstein-cymex.com**

[a)] At max. 10 % F_{2QMax}
[b)] Valid for standard clamping hub diameter
[c)] Refers to center of the output shaft or flange
[d)] Please reduce input speed at higher ambient temperatures
[e)] Smooth shaft

View A | View B

1-stage

Motor shaft diameter [mm]

up to 24 [4] (G) [5] clamping hub diameter

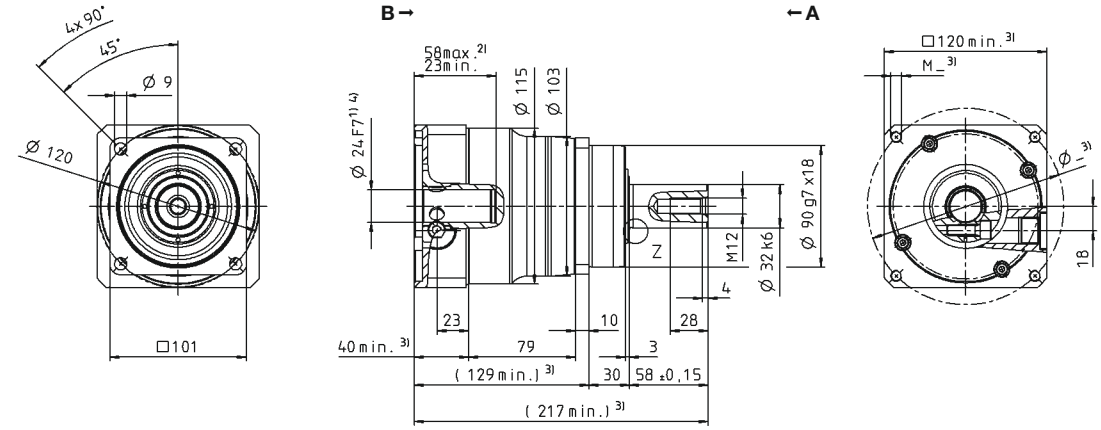

up to 38 [4] (K) clamping hub diameter

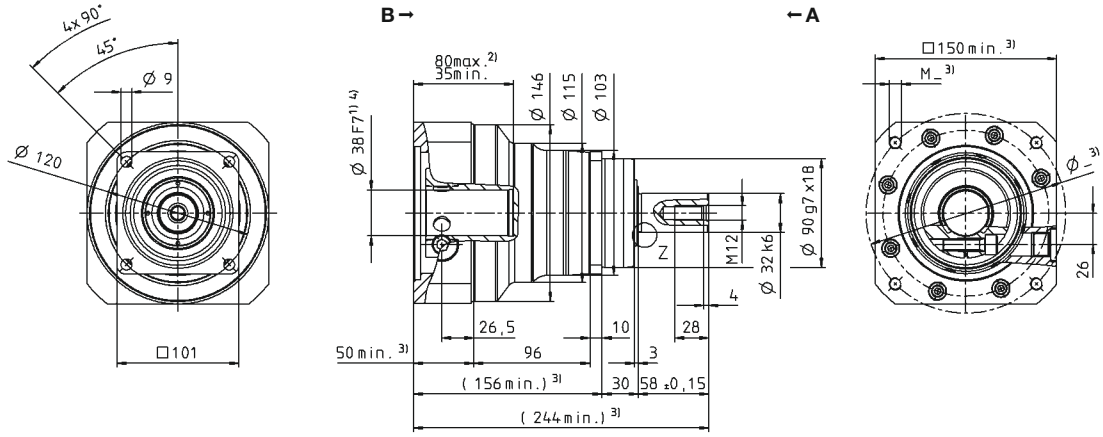

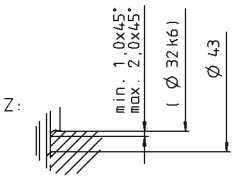

Other output variants

Shaft with key

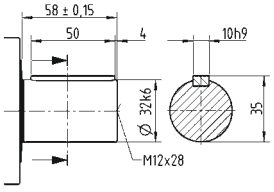

Splined shaft (DIN 5480)

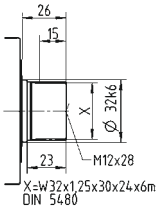

Shaft mounted

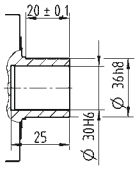

Non-tolerated dimensions are nominal dimensions

1) Check motor shaft fit
2) Min./Max. permissible motor shaft length. Longer motor shafts are possible, please contact alpha.
3) The dimensions depend on the motor
4) Smaller motor shaft diameter is compensated by a bushing with a minimum thickness of 1 mm
5) Standard clamping hub diameter

				2-stage										
Ratio			*i*	**16**	**20**	**25**	**28**	**32**	**35**	**40**	**50**	**64**	**70**	**100**
Max. torque [a) b) e)]			T_{2a}	*Nm*	240	240	240	240	240	240	240	240	180	240	180
				in.lb	2124	2124	2124	2124	2124	2124	2124	2124	1593	2124	1593
Max. acceleration torque [b) e)] (max. 1000 cycles per hour)			T_{2B}	*Nm*	240	240	240	240	240	240	240	240	180	240	180
				in.lb	2124	2124	2124	2124	2124	2124	2124	2124	1593	2124	1593
Nominal torque (at n_{1N})			T_{2N}	*Nm*	138	148	149	164	141	164	183	182	144	189	144
				in.lb	1221	1313	1322	1453	1251	1450	1617	1614	1275	1673	1275
Emergency stop torque [a) b) e)] (permitted 1000 times during the service life of the gearbox)			T_{2Not}	*Nm*	625	625	625	625	625	625	625	625	599	625	599
				in.lb	5532	5532	5532	5532	5532	5532	5532	5532	5302	5532	5302
Permitted average input speed (at T_{2N} and 20 °C ambient temperature) [d)]			n_{1N}	*rpm*	4500	4500	4500	4500	4500	4500	4500	4500	4500	4500	4500
Max. input speed			n_{1Max}	*rpm*	6000	6000	6000	6000	6000	6000	6000	6000	6000	6000	6000
Mean no load running torque [b)] (at n_1 = 3000 rpm and 20 °C gearbox temperature)			T_{012}	*Nm*	0.52	0.53	0.48	0.43	0.38	0.28	0.40	0.25	0.25	0.20	0.19
				in.lb	4.6	4.7	4.2	3.8	3.4	2.5	3.5	2.2	2.2	1.8	1.7
Max. backlash			j_t	*arcmin*	Standard ≤ 6 / Reduced ≤ 4										
Torsional rigidity [b)]			C_{t21}	*Nm/arcmin*	31										
				in.lb/arcmin	274										
Max. axial force [c)]			F_{2AMax}	*N*	5650										
				lb_f	1271										
Max. lateral force [c)]			F_{2QMax}	*N*	6600										
				lb_f	1485										
Max. tilting moment			M_{2KMax}	*Nm*	487										
				in.lb	4310										
Efficiency at full load			η	*%*	96.5										
Service life			L_h	*h*	> 30000										
Weight (incl. standard adapter plate)			*m*	*kg*	7.9										
				lb_m	17.5										
Operating noise (at reference ratio and reference speed – ratio-specific values available in cymex®)			L_{PA}	*dB(A)*	≤ 56										
Max. permitted housing temperature				*°C*	+90										
				F	194										
Ambient temperature				*°C*	–15 to +40										
				F	5 to 104										
Lubrication					Lubricated for life										
Direction of rotation					In- and output same direction										
Protection class					IP 65										
Metal bellows coupling (recommended product type – validate sizing with cymex®)					BC2-00300AA032.000-X										
Bore diameter of coupling on the application side				*mm*	X = 024.000 - 060.000										
Mass moment of inertia (relates to the drive) Clamping hub diameter [mm]	E	19	J_1	$kgcm^2$	0.81	0.70	0.68	0.60	0.43	0.59	0.55	0.54	0.38	0.54	0.54
				10^{-3} $in.lb.s^2$	0.72	0.62	0.60	0.53	0.38	0.52	0.49	0.48	0.34	0.48	0.48
	G	24	J_1	$kgcm^2$	2.18	2.07	2.05	1.97	2.06	1.96	1.92	1.91	1.91	1.91	1.91
				10^{-3} $in.lb.s^2$	1.93	1.83	1.81	1.74	1.82	1.73	1.70	1.69	1.69	1.69	1.69

Please use our sizing software cymex® for a detailed sizing – **www.wittenstein-cymex.com**

a) At max. 10 % F_{2QMax}
b) Valid for standard clamping hub diameter
c) Refers to center of the output shaft or flange
d) Please reduce input speed at higher ambient temperatures
e) Smooth shaft

View A View B

2-stage

Motor shaft diameter [mm]

up to 19 [4] (E) [5] clamping hub diameter

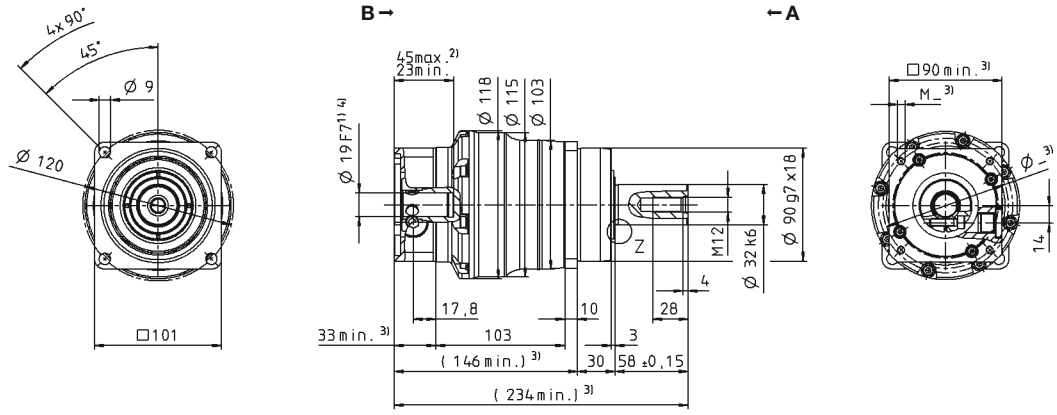

up to 24 [4] (G) clamping hub diameter

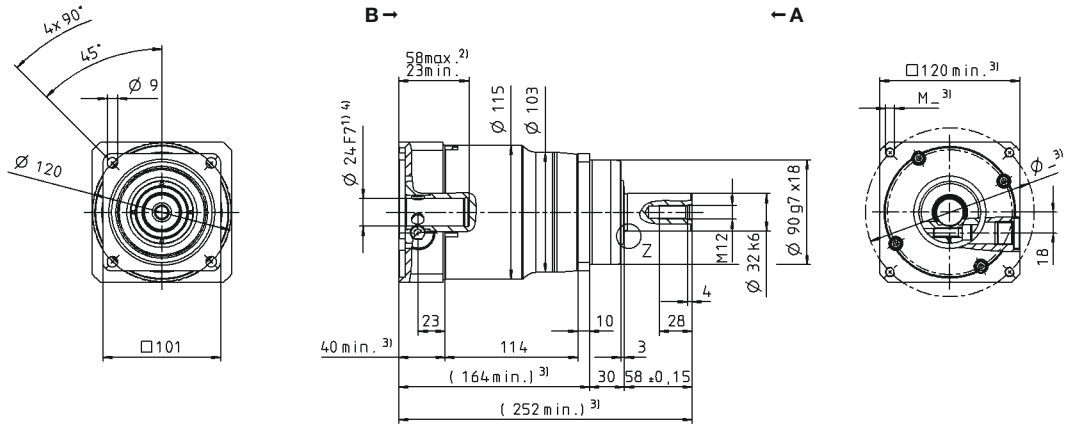

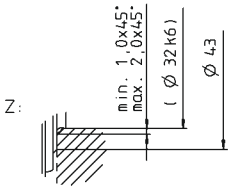

Other output variants

Shaft with key

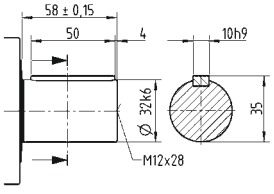

Splined shaft (DIN 5480)

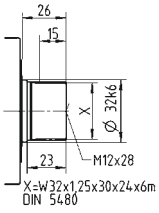

Shaft mounted

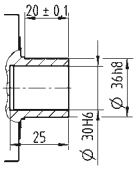

Non-tolerated dimensions are nominal dimensions

1) Check motor shaft fit
2) Min./Max. permissible motor shaft length. Longer motor shafts are possible, please contact alpha.
3) The dimensions depend on the motor
4) Smaller motor shaft diameter is compensated by a bushing with a minimum thickness of 1 mm
5) Standard clamping hub diameter

			Standard version MC						Friction optimized version L					
Ratio	*i*		**3**	**4**	**5**	**7**	**8**	**10**	**3**	**4**	**5**	**7**	**8**	**10**
Max. torque [a) b) e)]	T_{2a}	*Nm*	310	480	480	480	380	380	310	480	480	480	380	380
		in.lb	2744	4248	4248	4248	3363	3363	2744	4248	4248	4248	3363	3363
Max. acceleration torque [b) e)] (max. 1000 cycles per hour)	T_{2B}	*Nm*	310	480	480	480	380	380	310	480	480	480	380	380
		in.lb	2744	4248	4248	4248	3363	3363	2744	4248	4248	4248	3363	3363
Nominal torque (at n_{1N})	T_{2N}	*Nm*	127	195	182	187	186	195	127	195	182	187	186	195
		in.lb	1122	1730	1612	1656	1644	1727	1122	1730	1612	1656	1644	1727
Emergency stop torque [a) b) e)] (permitted 1000 times during the service life of the gearbox)	T_{2Not}	*Nm*	1250	1350	1350	1350	1250	1250	1250	1350	1350	1350	1250	1250
		in.lb	11064	11949	11949	11949	11064	11064	11064	11949	11949	11949	11064	11064
Permitted average input speed (at T_{2N} and 20 °C ambient temperature) [d)]	n_{1N}	*rpm*	3000	3500	4500	4500	4500	4500	3000	3500	4500	4500	4500	4500
Max. input speed	n_{1Max}	*rpm*	6000	6000	6000	6000	6000	6000	6000	6000	6000	6000	6000	6000
Mean no load running torque [b)] (at n_1 = 3000 rpm and 20 °C gearbox temperature)	T_{012}	*Nm*	4.1	3.5	2.8	2.2	1.8	1.7	2.0	1.5	1.2	1.0	0.9	0.9
		in.lb	36	31	25	20	16	15	18	13	11	8.9	8.0	8.0
Max. backlash	j_t	*arcmin*	Standard ≤ 4 / Reduced ≤ 2											
Torsional rigidity [b)]	C_{t21}	*Nm/arcmin*	53											
		in.lb/arcmin	469											
Max. axial force [c)]	F_{2AMax}	*N*	9870						3000					
		lb_f	2221						675					
Max. lateral force [c)]	F_{2QMax}	*N*	9900						1200					
		lb_f	2228						270					
Max. tilting moment	M_{2KMax}	*Nm*	952						110					
		in.lb	8426						974					
Efficiency at full load	η	*%*	98.5						99					
Service life	L_h	*h*	> 30000											
Weight (incl. standard adapter plate)	*m*	*kg*	17.2											
		lb_m	38											
Operating noise (at reference ratio and reference speed – ratio-specific values available in cymex®)	L_{PA}	*dB(A)*	≤ 59											
Max. permitted housing temperature		*°C*	+90											
		F	194											
Ambient temperature		*°C*	–15 to +40											
		F	5 to 104											
Lubrication			Lubricated for life											
Direction of rotation			In- and output same direction											
Protection class			IP 65						IP 52					
Metal bellows coupling (recommended product type – validate sizing with cymex®)			BC2-00500AA040.000-X											
Bore diameter of coupling on the application side		*mm*	X = 035.000 - 060.000											
Mass moment of inertia (relates to the drive) — Clamping hub diameter [mm]: K 38	J_1	$kgcm^2$	14.9	12.1	11.0	10.1	10.1	9.5	14.9	12.1	11.0	10.1	10.1	9.5
		10^{-3} $in.lb.s^2$	13.2	10.7	9.7	8.9	8.9	8.4	13.2	10.7	9.7	8.9	8.9	8.4
Mass moment of inertia — Clamping hub diameter [mm]: M 48	J_1	$kgcm^2$	29.5	26.7	25.6	24.7	24.7	24.2	29.5	26.7	25.6	24.7	24.7	24.2
		10^{-3} $in.lb.s^2$	26.1	23.6	22.7	21.9	21.9	21.4	26.1	23.6	22.7	21.9	21.9	21.4

Please use our sizing software cymex® for a detailed sizing – **www.wittenstein-cymex.com**

a) At max. 10 % F_{2QMax}
b) Valid for standard clamping hub diameter
c) Refers to center of the output shaft or flange
d) Please reduce input speed at higher ambient temperatures
e) Smooth shaft

View A | View B

1-stage

Motor shaft diameter [mm]

up to 38 [4] (K) [5] clamping hub diameter

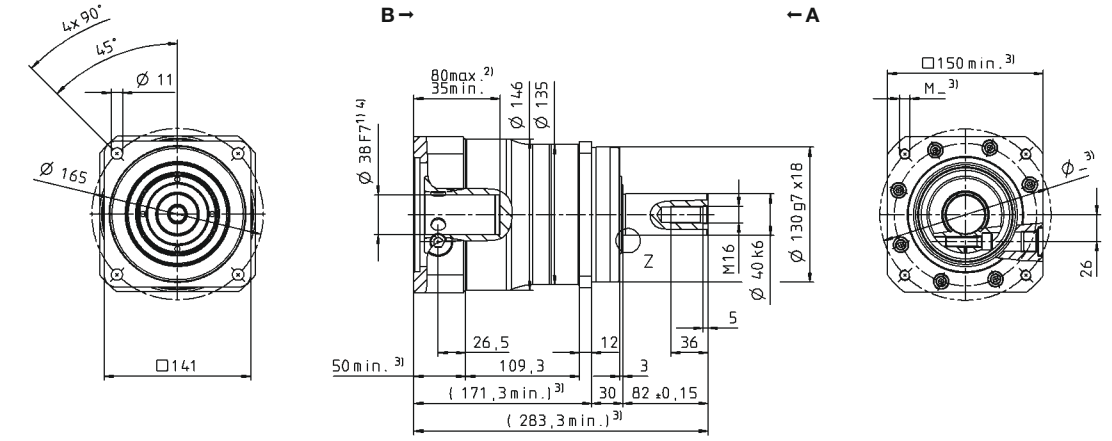

up to 48 [4] (M) clamping hub diameter

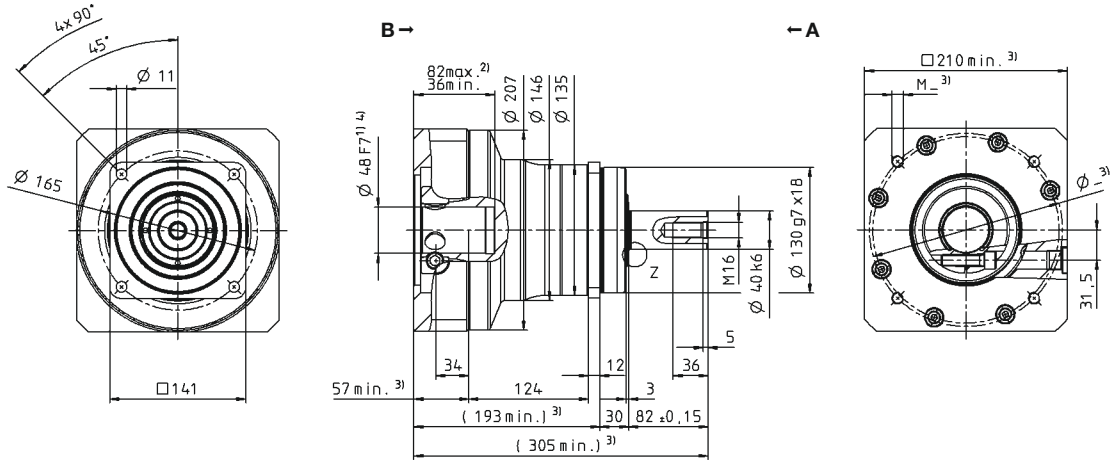

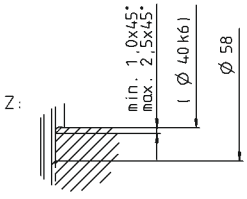

Other output variants

Shaft with key

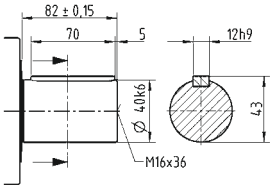

Splined shaft (DIN 5480)

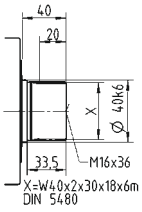

Shaft mounted

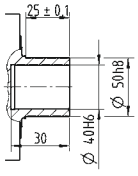

Non-tolerated dimensions are nominal dimensions

1) Check motor shaft fit
2) Min./Max. permissible motor shaft length. Longer motor shafts are possible, please contact alpha.
3) The dimensions depend on the motor
4) Smaller motor shaft diameter is compensated by a bushing with a minimum thickness of 1 mm
5) Standard clamping hub diameter

				2-stage										
Ratio			*i*	**16**	**20**	**25**	**28**	**32**	**35**	**40**	**50**	**64**	**70**	**100**
Max. torque [a) b) e)]			T_{2a}	*Nm*	480	480	480	480	480	480	480	480	380	480	380
				in.lb	4248	4248	4248	4248	4248	4248	4248	4248	3363	4248	3363
Max. acceleration torque [b) e)] (max. 1000 cycles per hour)			T_{2B}	*Nm*	480	480	480	480	480	480	480	480	380	480	380
				in.lb	4248	4248	4248	4248	4248	4248	4248	4248	3363	4248	3363
Nominal torque (at n_{1N})			T_{2N}	*Nm*	277	297	298	328	287	329	364	367	304	304	304
				in.lb	2447	2629	2636	2900	2544	2915	3219	3250	2691	2690	2691
Emergency stop torque [a) b) e)] (permitted 1000 times during the service life of the gearbox)			T_{2Not}	*Nm*	1350	1350	1350	1350	1350	1350	1350	1350	1250	1350	1250
				in.lb	11949	11949	11949	11949	11949	11949	11949	11949	11064	11949	11064
Permitted average input speed (at T_{2N} and 20 °C ambient temperature) [d)]			n_{1N}	*rpm*	4500	4500	4500	4500	4500	4500	4500	4500	4500	4500	4500
Max. input speed			n_{1Max}	*rpm*	6000	6000	6000	6000	6000	6000	6000	6000	6000	6000	6000
Mean no load running torque [b)] (at n_1 = 3000 rpm and 20 °C gearbox temperature)			T_{012}	*Nm*	1.1	1.0	0.96	0.80	0.72	0.60	0.55	0.45	0.45	0.40	0.40
				in.lb	9.7	9.2	8.5	7.1	6.4	5.3	4.9	4.0	4.0	3.5	3.5
Max. backlash			j_t	*arcmin*	Standard ≤ 6 / Reduced ≤ 4										
Torsional rigidity [b)]			C_{t21}	*Nm/arcmin*	53										
				in.lb/arcmin	469										
Max. axial force [c)]			F_{2AMax}	*N*	9870										
				lb_f	2221										
Max. lateral force [c)]			F_{2QMax}	*N*	9900										
				lb_f	2228										
Max. tilting moment			M_{2KMax}	*Nm*	952										
				in.lb	8426										
Efficiency at full load			η	*%*	96.5										
Service life			L_h	*h*	> 30000										
Weight (incl. standard adapter plate)			*m*	*kg*	17										
				lb_m	37.6										
Operating noise (at reference ratio and reference speed – ratio-specific values available in cymex®)			L_{PA}	*dB(A)*	≤ 59										
Max. permitted housing temperature				*°C*	+90										
				F	194										
Ambient temperature				*°C*	–15 to +40										
				F	5 to 104										
Lubrication					Lubricated for life										
Direction of rotation					In- and output same direction										
Protection class					IP 65										
Metal bellows coupling (recommended product type – validate sizing with cymex®)					BC2-00500AA040.000-X										
Bore diameter of coupling on the application side				*mm*	X = 035.000 - 060.000										
Mass moment of inertia (relates to the drive) Clamping hub diameter [mm]	G	24	J_1	*kgcm²*	3.19	2.71	2.67	2.34	1.65	2.32	2.10	2.08	2.08	2.08	2.07
				10^{-3} *in.lb.s²*	2.82	2.40	2.36	2.07	1.46	2.05	1.86	1.84	1.84	1.84	1.83
	K	38	J_1	*kgcm²*	10.3	9.77	9.73	9.41	2.34	9.39	9.16	9.15	1.39	9.14	9.14
				10^{-3} *in.lb.s²*	9.07	8.65	8.61	8.33	2.07	8.31	8.11	8.10	1.23	8.09	8.09

Please use our sizing software cymex® for a detailed sizing – **www.wittenstein-cymex.com**

a) At max. 10 % F_{2QMax}
b) Valid for standard clamping hub diameter
c) Refers to center of the output shaft or flange
d) Please reduce input speed at higher ambient temperatures
e) Smooth shaft

View A | View B

2-stage

Motor shaft diameter [mm]

up to 24 [4] (G) [5] clamping hub diameter

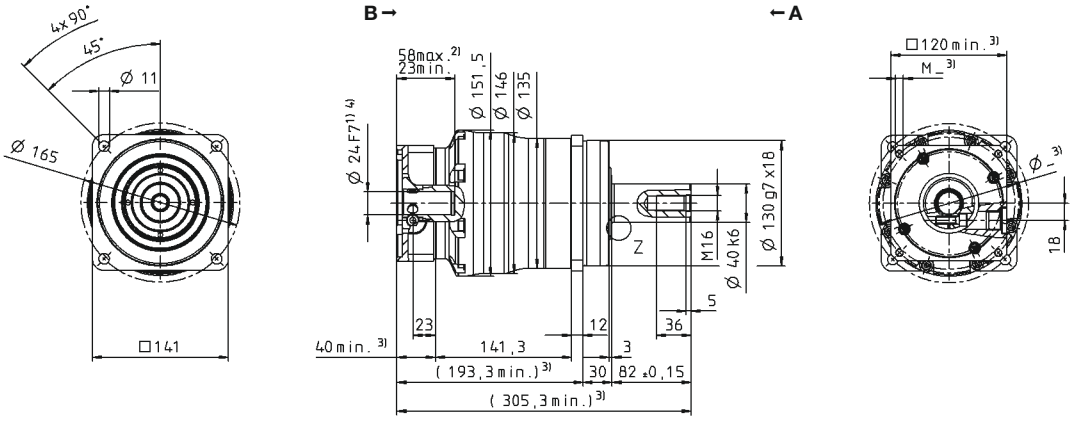

up to 38 [4] (K) clamping hub diameter

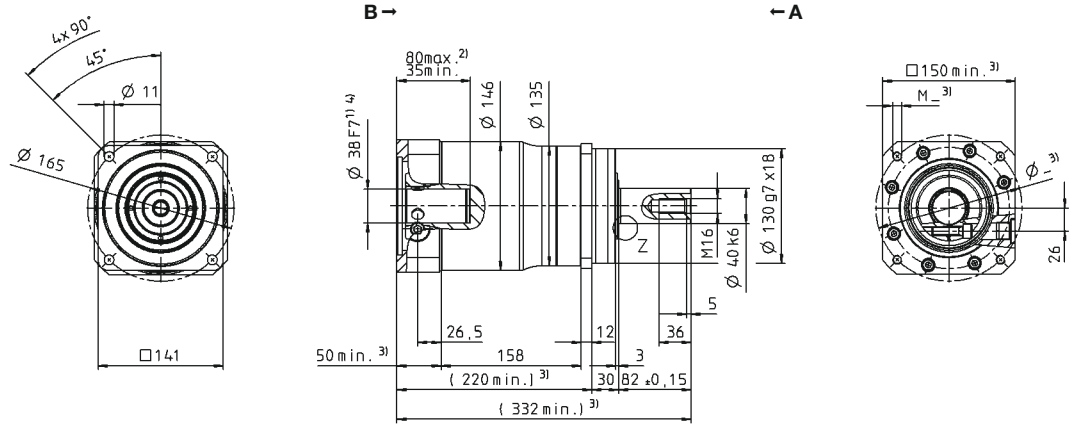

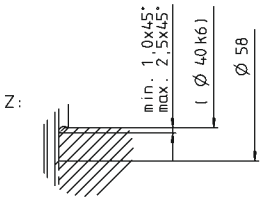

Other output variants

Shaft with key

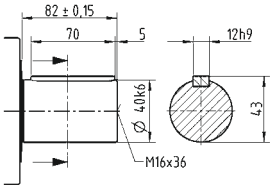

Splined shaft (DIN 5480)

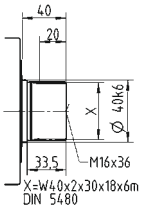

Shaft mounted

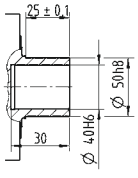

Non-tolerated dimensions are nominal dimensions

1) Check motor shaft fit
2) Min./Max. permissible motor shaft length. Longer motor shafts are possible, please contact alpha.
3) The dimensions depend on the motor
4) Smaller motor shaft diameter is compensated by a bushing with a minimum thickness of 1 mm
5) Standard clamping hub diameter

			Standard version MC						Friction optimized version L					
Ratio	*i*		**3**	**4**	**5**	**7**	**8**	**10**	**3**	**4**	**5**	**7**	**8**	**10**
Max. torque [a) b) e)]	T_{2a}	*Nm*	700	880	880	880	700	700	700	880	880	880	700	700
		in.lb	6196	7789	7789	7789	6196	6196	6196	7789	7789	7789	6196	6196
Max. acceleration torque [b) e)] (max. 1000 cycles per hour)	T_{2B}	*Nm*	700	880	880	880	700	700	700	880	880	880	700	700
		in.lb	6196	7789	7789	7789	6196	6196	6196	7789	7789	7789	6196	6196
Nominal torque (at n_{1N})	T_{2N}	*Nm*	289	492	379	469	465	488	289	492	379	469	465	488
		in.lb	2554	4355	3357	4151	4117	4316	2554	4355	3357	4151	4117	4316
Emergency stop torque [a) b) e)] (permitted 1000 times during the service life of the gearbox)	T_{2Not}	*Nm*	2640	2750	2750	2750	2640	2640	2640	2750	2750	2750	2640	2640
		in.lb	23366	24340	24340	24340	23366	23366	23366	24340	24340	24340	23366	23366
Permitted average input speed (at T_{2N} and 20 °C ambient temperature) [d)]	n_{1N}	*rpm*	3000	3500	4500	4500	4500	4500	3000	3500	4500	4500	4500	4500
Max. input speed	n_{1Max}	*rpm*	4500	6000	6000	6000	6000	6000	4500	6000	6000	6000	6000	6000
Mean no load running torque [b)] (at n_1 = 3000 rpm and 20 °C gearbox temperature)	T_{012}	*Nm*	8.8	7.4	6.0	4.4	4.4	3.2	3.8	3.0	2.3	1.8	1.7	1.6
		in.lb	78	66	53	39	39	28	34	27	20	16	15	14
Max. backlash	j_t	*arcmin*	Standard ≤ 4 / Reduced ≤ 2											
Torsional rigidity [b)]	C_{t21}	*Nm/arcmin*	175											
		in.lb/arcmin	1549											
Max. axial force [c)]	F_{2AMax}	*N*	14150						5000					
		lb_f	3184						1125					
Max. lateral force [c)]	F_{2QMax}	*N*	15400						2000					
		lb_f	3465						450					
Max. tilting moment	M_{2KMax}	*Nm*	1600						208					
		in.lb	14161						1841					
Efficiency at full load	η	*%*	98.5						99					
Service life	L_h	*h*	> 30000											
Weight (incl. standard adapter plate)	*m*	*kg*	34											
		lb_m	75.1											
Operating noise (at reference ratio and reference speed – ratio-specific values available in cymex®)	L_{PA}	*dB(A)*	≤ 62											
Max. permitted housing temperature		*°C*	+90											
		F	194											
Ambient temperature		*°C*	–15 to +40											
		F	5 to 104											
Lubrication			Lubricated for life											
Direction of rotation			In- and output same direction											
Protection class			IP 65						IP 52					
Metal bellows coupling (recommended product type – validate sizing with cymex®)			BC2-00800AA055.000-X											
Bore diameter of coupling on the application side		*mm*	X = 040.000 - 075.000											
Mass moment of inertia (relates to the drive) M 48	J_1	$kgcm^2$	58.5	41.6	35.6	30.0	30.0	26.9	58.5	41.6	35.6	30.0	30.0	26.9
Clamping hub diameter [mm]		10^{-3} *in.lb.s²*	51.8	36.8	31.5	26.6	26.6	23.8	51.8	36.8	31.5	26.6	26.6	23.8

Please use our sizing software cymex® for a detailed sizing – **www.wittenstein-cymex.com**

a) At max. 10 % F_{2QMax}
b) Valid for standard clamping hub diameter
c) Refers to center of the output shaft or flange
d) Please reduce input speed at higher ambient temperatures
e) Smooth shaft

View A

View B

Motor shaft diameter [mm]

1-stage

up to 48 [4] (M) [5] clamping hub diameter

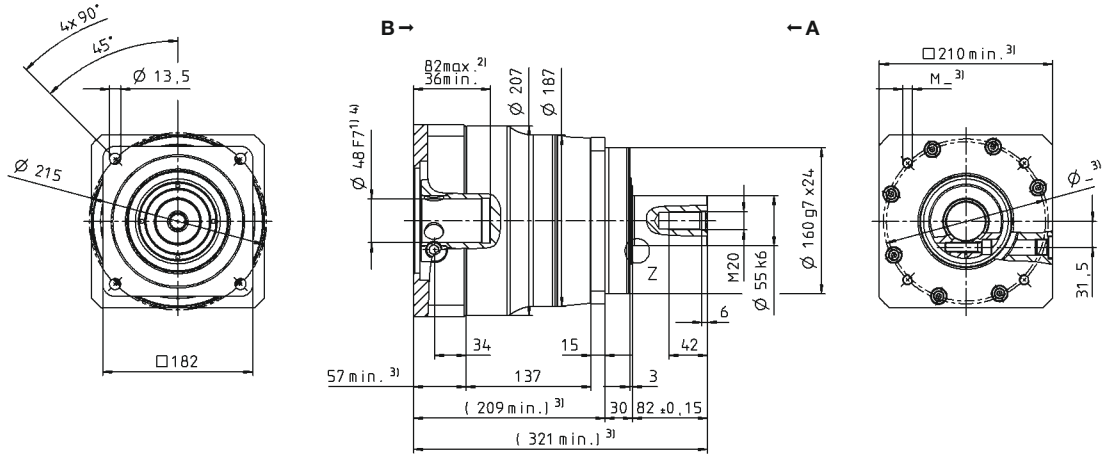

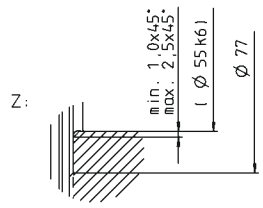

Other output variants

Shaft with key

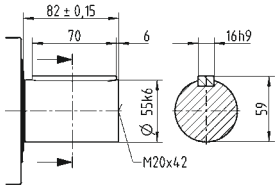

Splined shaft (DIN 5480)

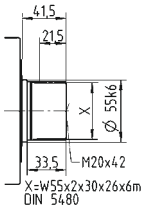

Shaft mounted

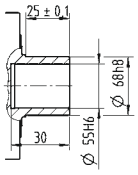

Non-tolerated dimensions are nominal dimensions

1) Check motor shaft fit
2) Min./Max. permissible motor shaft length. Longer motor shafts are possible, please contact alpha.
3) The dimensions depend on the motor
4) Smaller motor shaft diameter is compensated by a bushing with a minimum thickness of 1 mm
5) Standard clamping hub diameter

				2-stage										
Ratio			*i*	**16**	**20**	**25**	**28**	**32**	**35**	**40**	**50**	**64**	**70**	**100**
Max. torque [a) b) e)]			T_{2a}	*Nm*	880	880	880	880	880	880	880	880	700	880	700
				in.lb	7789	7789	7789	7789	7789	7789	7789	7789	6196	7789	6196
Max. acceleration torque [b) e)] (max. 1000 cycles per hour)			T_{2B}	*Nm*	880	880	880	880	880	880	880	880	700	880	700
				in.lb	7789	7789	7789	7789	7789	7789	7789	7789	6196	7789	6196
Nominal torque (at n_{1N})			T_{2N}	*Nm*	696	704	704	704	704	704	704	704	560	704	560
				in.lb	6156	6231	6231	6231	6231	6231	6231	6231	4956	6231	4956
Emergency stop torque [a) b) e)] (permitted 1000 times during the service life of the gearbox)			T_{2Not}	*Nm*	2750	2750	2750	2750	2750	2750	2750	2750	2640	2750	2640
				in.lb	24340	24340	24340	24340	24340	24340	24340	24340	23366	24340	23366
Permitted average input speed (at T_{2N} and 20 °C ambient temperature) [d)]			n_{1N}	*rpm*	4500	4500	4500	4500	4500	4500	4500	4500	4500	4500	4500
Max. input speed			n_{1Max}	*rpm*	6000	6000	6000	6000	6000	6000	6000	6000	6000	6000	6000
Mean no load running torque [b)] (at n_1 = 3000 rpm and 20 °C gearbox temperature)			T_{012}	*Nm*	2.2	2.3	1.8	1.7	1.7	1.4	1.2	1.2	1.2	0.95	1.0
				in.lb	20	21	16	15	15	12	11	11	11	8.4	9.2
Max. backlash			j_t	*arcmin*	Standard ≤ 6 / Reduced ≤ 4										
Torsional rigidity [b)]			C_{t21}	*Nm/arcmin*	175										
				in.lb/arcmin	1549										
Max. axial force [c)]			F_{2AMax}	*N*	14150										
				lb_f	3184										
Max. lateral force [c)]			F_{2QMax}	*N*	15400										
				lb_f	3465										
Max. tilting moment			M_{2KMax}	*Nm*	1600										
				in.lb	14161										
Efficiency at full load			η	*%*	96.5										
Service life			L_h	*h*	> 30000										
Weight (incl. standard adapter plate)			*m*	*kg*	36										
				lb_m	79.6										
Operating noise (at reference ratio and reference speed – ratio-specific values available in cymex®)			L_{PA}	*dB(A)*	≤ 58										
Max. permitted housing temperature				*°C*	+90										
				F	194										
Ambient temperature				*°C*	–15 to +40										
				F	5 to 104										
Lubrication					Lubricated for life										
Direction of rotation					In- and output same direction										
Protection class					IP 65										
Metal bellows coupling (recommended product type – validate sizing with cymex®)					BC2-00800AA055.000-X										
Bore diameter of coupling on the application side				*mm*	X = 040.000 - 075.000										
Mass moment of inertia (relates to the drive)	K	38	J_1	*kgcm²*	13.5	12.0	11.7	10.6	10.6	10.4	9.74	9.68	5.45	9.63	9.60
Clamping hub diameter [mm]				*10^{-3} in.lb.s²*	12.0	10.6	10.4	9.34	9.34	9.23	8.62	8.57	4.82	8.52	8.50

Please use our sizing software cymex® for a detailed sizing – **www.wittenstein-cymex.com**

a) At max. 10 % F_{2QMax}
b) Valid for standard clamping hub diameter
c) Refers to center of the output shaft or flange
d) Please reduce input speed at higher ambient temperatures
e) Smooth shaft

View A

View B

Motor shaft diameter [mm]

2-stage

up to 38 [4] (K) [5] clamping hub diameter

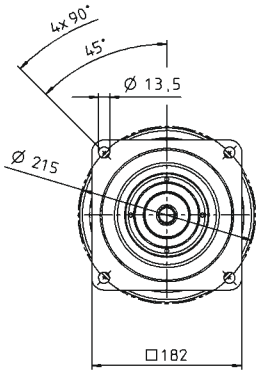

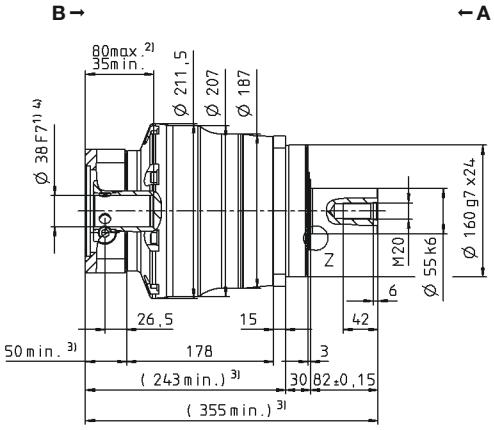

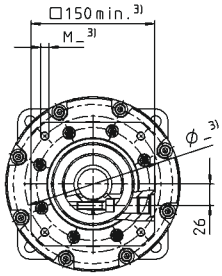

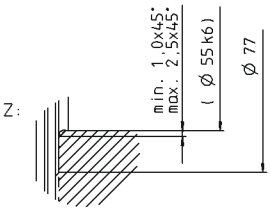

Other output variants

Shaft with key

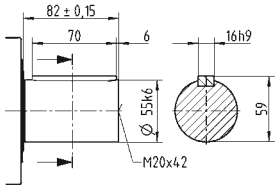

Splined shaft (DIN 5480)

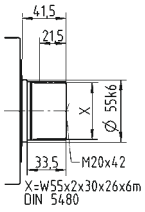

Shaft mounted

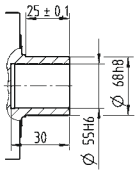

Non-tolerated dimensions are nominal dimensions

1) Check motor shaft fit
2) Min./Max. permissible motor shaft length. Longer motor shafts are possible, please contact alpha.
3) The dimensions depend on the motor
4) Smaller motor shaft diameter is compensated by a bushing with a minimum thickness of 1 mm
5) Standard clamping hub diameter

			Standard version MC						Friction optimized version L					
Ratio	*i*		**3**	**4**	**5**	**7**	**8**	**10**	**3**	**4**	**5**	**7**	**8**	**10**
Max. torque [a) b) e)]	T_{2a}	*Nm*	1200	2000	2000	1700	1200	1200	1200	2000	2000	1700	1200	1200
		in.lb	10621	17702	17702	15046	10621	10621	10621	17702	17702	15046	10621	10621
Max. acceleration torque [b) e)] (max. 1000 cycles per hour)	T_{2B}	*Nm*	1200	2000	2000	1700	1200	1200	1200	2000	2000	1700	1200	1200
		in.lb	10621	17702	17702	15046	10621	10621	10621	17702	17702	15046	10621	10621
Nominal torque (at n_{1N})	T_{2N}	*Nm*	960	1260	1141	1169	960	960	960	1260	1141	1169	960	960
		in.lb	8497	11148	10098	10347	8497	8497	8497	11148	10098	10347	8497	8497
Emergency stop torque [a) b) e)] (permitted 1000 times during the service life of the gearbox)	T_{2Not}	*Nm*	5900	5900	5900	5900	5900	5900	5900	5900	5900	5900	5900	5900
		in.lb	52220	52220	52220	52220	52220	52220	52220	52220	52220	52220	52220	52220
Permitted average input speed (at T_{2N} and 20 °C ambient temperature) [d)]	n_{1N}	*rpm*	2250	2500	3500	3500	3500	3500	2250	2500	3500	3500	3500	3500
Max. input speed	n_{1Max}	*rpm*	3400	6000	6000	6000	6000	6000	3400	6000	6000	6000	6000	6000
Mean no load running torque [b)] (at n_1 = 2000 rpm and 20 °C gearbox temperature)	T_{012}	*Nm*	12	11	8.4	5.6	5.6	3.6	5.5	4.9	4.6	4.0	3.8	3.6
		in.lb	108	99	74	50	50	32	49	43	41	35	34	32
Max. backlash	j_t	*arcmin*	Standard ≤ 4 / Reduced ≤ 2											
Torsional rigidity [b)]	C_{t21}	*Nm/arcmin*	400											
		in.lb/arcmin	3540											
Max. axial force [c)]	F_{2AMax}	*N*	30000						8000					
		lb_f	6750						1800					
Max. lateral force [c)]	F_{2QMax}	*N*	21000						2500					
		lb_f	4725						563					
Max. tilting moment	M_{2KMax}	*Nm*	3100						310					
		in.lb	27437						2744					
Efficiency at full load	η	*%*	98.5						99					
Service life	L_h	*h*	> 30000											
Weight (incl. standard adapter plate)	*m*	*kg*	58											
		lb_m	128.2											
Operating noise (at reference ratio and reference speed – ratio-specific values available in cymex®)	L_{PA}	*dB(A)*	≤ 64											
Max. permitted housing temperature		*°C*	+90											
		F	194											
Ambient temperature		*°C*	–15 to +40											
		F	5 to 104											
Lubrication			Lubricated for life											
Direction of rotation			In- and output same direction											
Protection class			IP 65						IP 52					
Metal bellows coupling (recommended product type – validate sizing with cymex®)			BC2-04000AA075.000-X											
Bore diameter of coupling on the application side		*mm*	X = 050.000 - 090.000											
Mass moment of inertia (relates to the drive) N 55	J_1	$kgcm^2$	139	94.3	76.9	61.5	61.5	53.1	139	94.3	76.9	61.5	61.5	53.1
Clamping hub diameter [mm]		10^{-3} *in.lb.s²*	123	83.5	68.1	54.4	54.4	47.0	123	83.5	68.1	54.4	54.4	47.0

Please use our sizing software cymex® for a detailed sizing – **www.wittenstein-cymex.com**

a) At max. 10 % F_{2QMax}
b) Valid for standard clamping hub diameter
c) Refers to center of the output shaft or flange
d) Please reduce input speed at higher ambient temperatures
e) Smooth shaft

View A

View B

Motor shaft diameter [mm]

1-stage

up to 55 [4] (N) [5]
clamping hub diameter

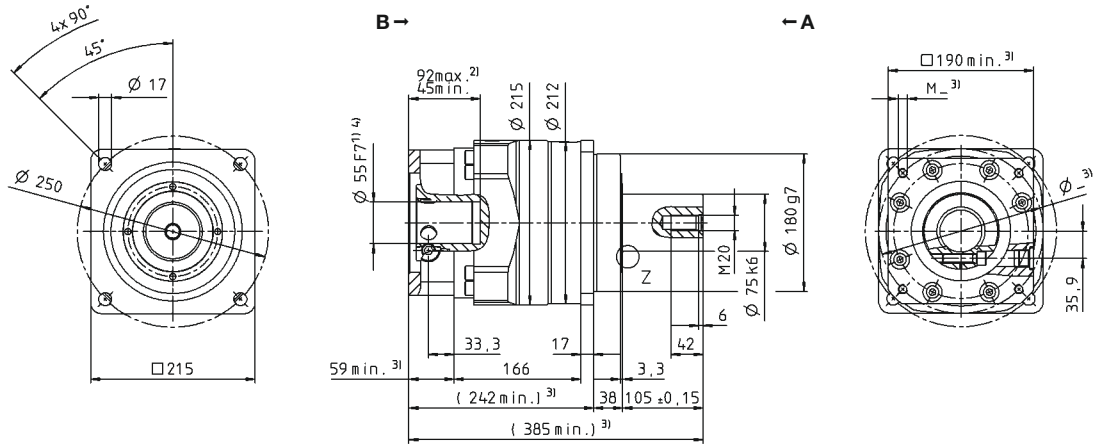

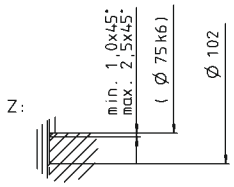

Other output variants

Shaft with key

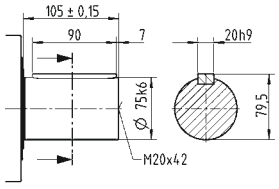

Splined shaft (DIN 5480)

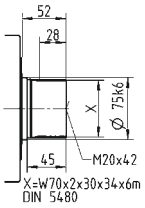

Non-tolerated dimensions are nominal dimensions
[1] Check motor shaft fit
[2] Min./Max. permissible motor shaft length. Longer motor shafts are possible, please contact alpha.
[3] The dimensions depend on the motor
[4] Smaller motor shaft diameter is compensated by a bushing with a minimum thickness of 1 mm
[5] Standard clamping hub diameter

SP+ 210 MC 2-stage

				2-stage										
Ratio			*i*	**16**	**20**	**25**	**28**	**32**	**35**	**40**	**50**	**64**	**70**	**100**
Max. torque [a) b) e)]			T_{2a}	*Nm*	1680	1800	2000	1680	1680	1920	1040	1300	1200	1700	1200
				in.lb	14869	15931	17702	14869	14869	16994	9205	11506	10621	15046	10621
Max. acceleration torque [b) e)] (max. 1000 cycles per hour)			T_{2B}	*Nm*	1680	1800	2000	1680	1680	1920	1040	1300	1200	1700	1200
				in.lb	14869	15931	17702	14869	14869	16994	9205	11506	10621	15046	10621
Nominal torque (at n_{1N})			T_{2N}	*Nm*	898	728	910	744	1344	929	787	984	960	1360	960
				in.lb	7949	6445	8056	6581	11895	8226	6969	8711	8497	12037	8497
Emergency stop torque [a) b) e)] (permitted 1000 times during the service life of the gearbox)			T_{2Not}	*Nm*	5900	5900	5900	5900	5900	5900	5900	5900	5900	5900	5900
				in.lb	52220	52220	52220	52220	52220	52220	52220	52220	52220	52220	52220
Permitted average input speed (at T_{2N} and 20 °C ambient temperature) [d)]			n_{1N}	*rpm*	3500	4500	4500	4500	4500	4500	4500	4500	4500	4500	4500
Max. input speed			n_{1Max}	*rpm*	6000	6000	6000	6000	6000	6000	6000	6000	6000	6000	6000
Mean no load running torque [b)] (at n_1 = 2000 rpm and 20 °C gearbox temperature)			T_{012}	*Nm*	3.4	3.1	2.9	2.6	2.6	2.0	2.0	1.8	1.8	1.6	1.6
				in.lb	30	27	25	23	23	18	18	16	16	14	14
Max. backlash			j_t	*arcmin*	Standard ≤ 5 / Reduced ≤ 4										
Torsional rigidity [b)]			C_{t21}	*Nm/arcmin*	400										
				in.lb/arcmin	3540										
Max. axial force [c)]			F_{2AMax}	*N*	30000										
				lb_f	6750										
Max. lateral force [c)]			F_{2QMax}	*N*	21000										
				lb_f	4725										
Max. tilting moment			M_{2KMax}	*Nm*	3100										
				in.lb	27437										
Efficiency at full load			η	*%*	96.5										
Service life			L_h	*h*	> 30000										
Weight (incl. standard adapter plate)			*m*	*kg*	53										
				lb_m	117.1										
Operating noise (at reference ratio and reference speed – ratio-specific values available in cymex®)			L_{PA}	*dB(A)*	≤ 57										
Max. permitted housing temperature				*°C*	+90										
				F	194										
Ambient temperature				*°C*	–15 to +40										
				F	5 to 104										
Lubrication					Lubricated for life										
Direction of rotation					In- and output same direction										
Protection class					IP 65										
Metal bellows coupling (recommended product type – validate sizing with cymex®)					BC2-04000AA075.000-X										
Bore diameter of coupling on the application side				*mm*	X = 050.000 - 090.000										
Mass moment of inertia (relates to the drive)	M	48	J_1	*kgcm²*	34.5	31.5	30.8	30.0	30.0	29.7	28.5	28.3	28.3	28.1	28.0
Clamping hub diameter [mm]				*10^{-3} in.lb.s²*	30.5	27.9	27.3	26.6	26.6	26.3	25.2	25.0	25.0	24.9	24.8

Please use our sizing software cymex® for a detailed sizing – **www.wittenstein-cymex.com**

[a)] At max. 10 % F_{2QMax}
[b)] Valid for standard clamping hub diameter
[c)] Refers to center of the output shaft or flange
[d)] Please reduce input speed at higher ambient temperatures
[e)] Smooth shaft

View A

View B

Motor shaft diameter [mm]

2-stage

up to 48 [4] (M) [5] clamping hub diameter

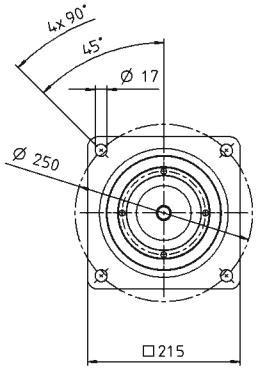

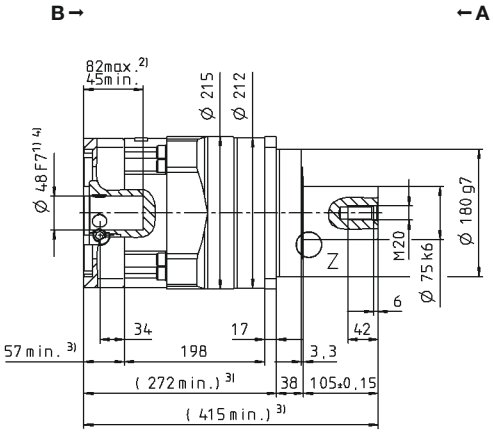

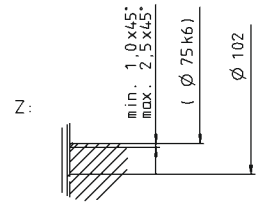

Other output variants

Shaft with key

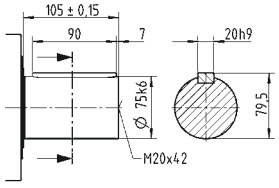

Splined shaft (DIN 5480)

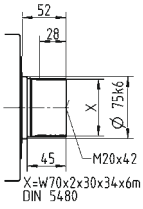

Non-tolerated dimensions are nominal dimensions

1) Check motor shaft fit
2) Min./Max. permissible motor shaft length. Longer motor shafts are possible, please contact alpha.
3) The dimensions depend on the motor
4) Smaller motor shaft diameter is compensated by a bushing with a minimum thickness of 1 mm
5) Standard clamping hub diameter

			Standard version MC						Friction optimized version L					
Ratio	*i*		**3**	**4**	**5**	**7**	**8**	**10**	**3**	**4**	**5**	**7**	**8**	**10**
Max. torque [a) b) e)]	T_{2a}	*Nm*	1750	3500	3600	2700	1800	1800	1750	3500	3600	2700	1800	1800
		in.lb	15489	30978	31863	23897	15931	15931	15489	30978	31863	23897	15931	15931
Max. acceleration torque [b) e)] (max. 1000 cycles per hour)	T_{2B}	*Nm*	1750	3500	3600	2700	1800	1800	1750	3500	3600	2700	1800	1800
		in.lb	15489	30978	31863	23897	15931	15931	15489	30978	31863	23897	15931	15931
Nominal torque (at n_{1N})	T_{2N}	*Nm*	1400	2029	1861	1910	1440	1440	1400	2029	1861	1910	1440	1440
		in.lb	12391	17955	16471	16909	12745	12745	12391	17955	16471	16909	12745	12745
Emergency stop torque [a) b) e)] (permitted 1000 times during the service life of the gearbox)	T_{2Not}	*Nm*	6850	8500	8500	8500	6850	6850	6850	8500	8500	8500	6850	6850
		in.lb	60628	75232	75232	75232	60628	60628	60628	75232	75232	75232	60628	60628
Permitted average input speed (at T_{2N} and 20 °C ambient temperature) [d)]	n_{1N}	*rpm*	1750	2250	3000	3000	3000	3000	1750	2250	3000	3000	3000	3000
Max. input speed	n_{1Max}	*rpm*	3400	4000	5000	5000	5000	5000	3400	4000	5000	5000	5000	5000
Mean no load running torque [b)] (at n_1 = 2000 rpm and 20 °C gearbox temperature)	T_{012}	*Nm*	18	16	12	8.6	8.6	5.8	8.0	7.0	6.0	5.0	4.8	4.2
		in.lb	159	141	107	77	77	51	71	62	53	44	43	37
Max. backlash	j_t	*arcmin*	Standard ≤ 4 / Reduced ≤ 2											
Torsional rigidity [b)]	C_{t21}	*Nm/arcmin*	550											
		in.lb/arcmin	4868											
Max. axial force [c)]	F_{2AMax}	*N*	33000						10000					
		lb_f	7425						2250					
Max. lateral force [c)]	F_{2QMax}	*N*	30000						2000					
		lb_f	6750						450					
Max. tilting moment	M_{2KMax}	*Nm*	5000						280					
		in.lb	44254						2478					
Efficiency at full load	η	*%*	98.5						99					
Service life	L_h	*h*	> 30000											
Weight (incl. standard adapter plate)	*m*	*kg*	83											
		lb_m	183.4											
Operating noise (at reference ratio and reference speed – ratio-specific values available in cymex®)	L_{PA}	*dB(A)*	≤ 66											
Max. permitted housing temperature		*°C*	+90											
		F	194											
Ambient temperature		*°C*	–15 to +40											
		F	5 to 104											
Lubrication			Lubricated for life											
Direction of rotation			In- and output same direction											
Protection class			IP 65						IP 52					
Metal bellows coupling (recommended product type – validate sizing with cymex®)			BC2-04000AA085.000-X											
Bore diameter of coupling on the application side		*mm*	X = 050.000 - 090.000											
Mass moment of inertia (relates to the drive) O 60 Clamping hub diameter [mm]	J_1	$kgcm^2$	260	198	163	138	138	125	260	198	163	138	138	125
		10^{-3} $in.lb.s^2$	230	175	144	122	122	110	230	175	144	122	122	110

Please use our sizing software cymex® for a detailed sizing – **www.wittenstein-cymex.com**

a) At max. 10 % F_{2QMax}
b) Valid for standard clamping hub diameter
c) Refers to center of the output shaft or flange
d) Please reduce input speed at higher ambient temperatures
e) Smooth shaft

View A

View B

Motor shaft diameter [mm]

1-stage

up to 60 [4] (O) [5]
clamping hub diameter

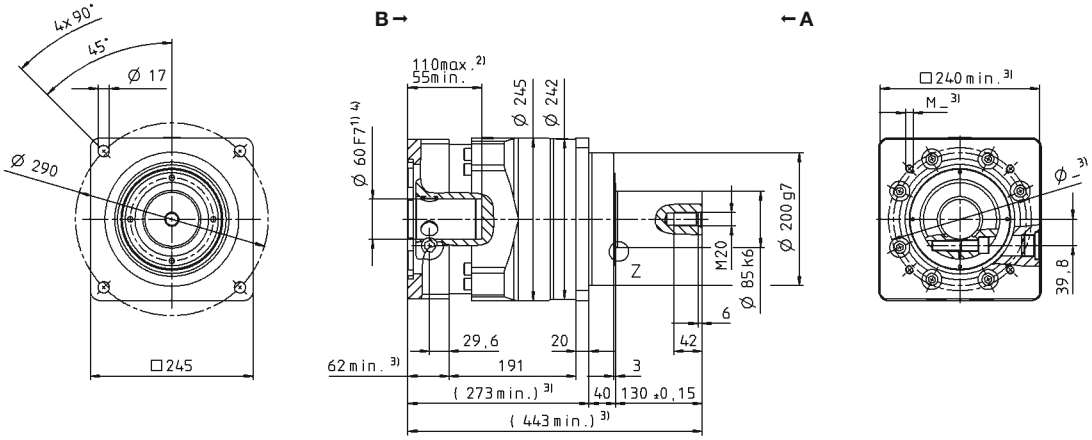

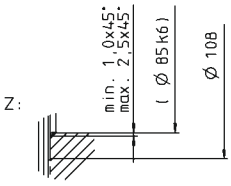

Other output variants

Shaft with key

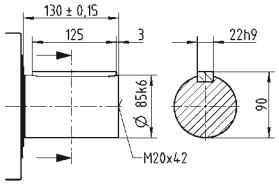

Splined shaft (DIN 5480)

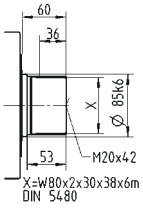

Non-tolerated dimensions are nominal dimensions

1) Check motor shaft fit
2) Min./Max. permissible motor shaft length. Longer motor shafts are possible, please contact alpha.
3) The dimensions depend on the motor
4) Smaller motor shaft diameter is compensated by a bushing with a minimum thickness of 1 mm
5) Standard clamping hub diameter

SP+ 240 MC 2-stage

			2-stage										
Ratio	i		**16**	**20**	**25**	**28**	**32**	**35**	**40**	**50**	**64**	**70**	**100**
Max. torque [a) b) e)]	T_{2a}	*Nm*	3500	3500	3600	2900	2900	3600	1680	2100	1800	2700	1800
		in.lb	30978	30978	31863	25667	25667	31863	14869	18587	15931	23897	15931
Max. acceleration torque [b) e)] (max. 1000 cycles per hour)	T_{2B}	*Nm*	3500	3500	3600	2900	2900	3600	1680	2100	1800	2700	1800
		in.lb	30978	30978	31863	25667	25667	31863	14869	18587	15931	23897	15931
Nominal torque (at n_{1N})	T_{2N}	*Nm*	1950	1803	2266	1867	2320	2694	1344	1680	1440	2160	1440
		in.lb	17255	15960	20058	16521	20534	23843	11895	14869	12745	19118	12745
Emergency stop torque [a) b) e)] (permitted 1000 times during the service life of the gearbox)	T_{2Not}	*Nm*	8500	8500	8500	8500	8500	8500	8500	8500	6850	8500	6850
		in.lb	75232	75232	75232	75232	75232	75232	75232	75232	60628	75232	60628
Permitted average input speed (at T_{2N} and 20 °C ambient temperature) [d)]	n_{1N}	*rpm*	3500	4500	4500	4500	4500	4500	4500	4500	4500	4500	4500
Max. input speed	n_{1Max}	*rpm*	6000	6000	6000	6000	6000	6000	6000	6000	6000	6000	6000
Mean no load running torque [b)] (at n_1 = 2000 rpm and 20 °C gearbox temperature)	T_{012}	*Nm*	4.8	4.4	4.0	3.6	3.6	2.8	2.4	2.0	2.0	1.6	1.4
		in.lb	43	39	35	32	32	25	21	18	18	14	13
Max. backlash	j_t	*arcmin*	Standard ≤ 5 / Reduced ≤ 4										
Torsional rigidity [b)]	C_{t21}	*Nm/arcmin*	550										
		in.lb/arcmin	4868										
Max. axial force [c)]	F_{2AMax}	*N*	33000										
		lb_f	7425										
Max. lateral force [c)]	F_{2QMax}	*N*	30000										
		lb_f	6750										
Max. tilting moment	M_{2KMax}	*Nm*	5000										
		in.lb	44254										
Efficiency at full load	η	*%*	96.5										
Service life	L_h	*h*	> 30000										
Weight (incl. standard adapter plate)	m	*kg*	76										
		lb_m	168.0										
Operating noise (at reference ratio and reference speed – ratio-specific values available in cymex®)	L_{PA}	*dB(A)*	≤ 58										
Max. permitted housing temperature		*°C*	+90										
		F	194										
Ambient temperature		*°C*	–15 to +40										
		F	5 to 104										
Lubrication			Lubricated for life										
Direction of rotation			In- and output same direction										
Protection class			IP 65										
Metal bellows coupling (recommended product type – validate sizing with cymex®)			BC2-04000AA085.000-X										
Bore diameter of coupling on the application side		*mm*	X = 050.000 - 090.000										
Mass moment of inertia (relates to the drive) M 48	J_1	$kgcm^2$	34.5	31.5	30.8	30.0	30.0	29.7	28.5	28.3	28.3	28.1	28.0
Clamping hub diameter [mm]		10^{-3} *in.lb.s²*	30.5	27.9	27.3	26.6	26.6	26.3	25.2	25.1	25.1	24.9	24.8

Please use our sizing software cymex® for a detailed sizing – **www.wittenstein-cymex.com**

[a)] At max. 10 % F_{2QMax}
[b)] Valid for standard clamping hub diameter
[c)] Refers to center of the output shaft or flange
[d)] Please reduce input speed at higher ambient temperatures
[e)] Smooth shaft

View A

View B

Motor shaft diameter [mm]

2-stage

up to 48 [4] (M) [5] clamping hub diameter

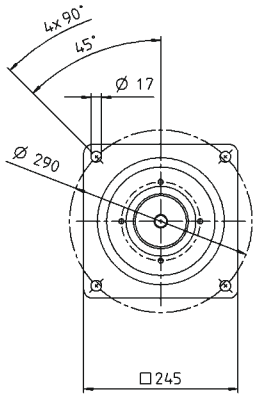

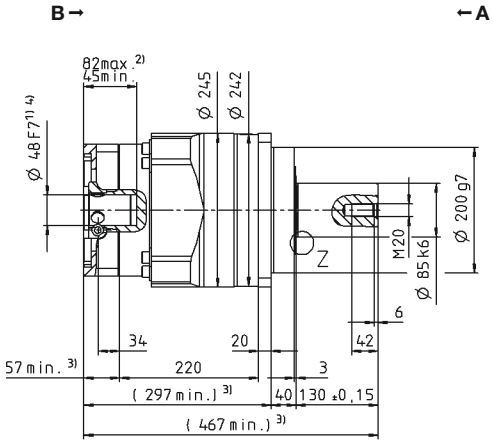

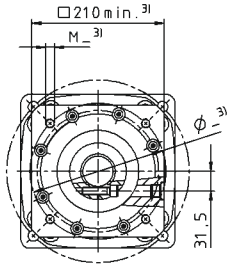

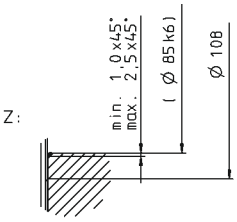

Other output variants

Shaft with key

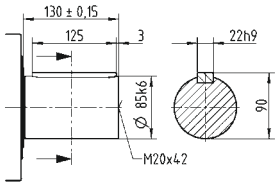

Splined shaft (DIN 5480)

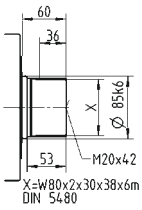

Non-tolerated dimensions are nominal dimensions

1) Check motor shaft fit
2) Min./Max. permissible motor shaft length. Longer motor shafts are possible, please contact alpha.
3) The dimensions depend on the motor
4) Smaller motor shaft diameter is compensated by a bushing with a minimum thickness of 1 mm
5) Standard clamping hub diameter

TP+ / TP+ HIGH TORQUE – Compact precision

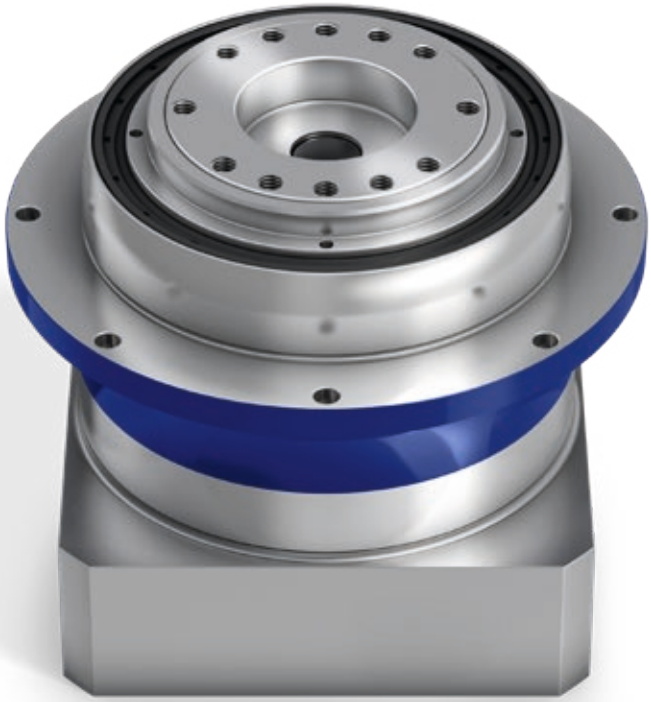

TP+

Compact top performers with output flange. The standard version is ideally suited for high positioning accuracy and highly dynamic cyclic operation. The TP+ HIGH TORQUE is particularly appropriate for high-precision applications in which high torsional rigidity is required.

Product highlights

Max. torsional backlash [arcmin] ≤ 1 – 4

High torsional rigidity

Space-saving design

Flexible drive options
Clamping hub socket, optimized mass inertia, keyed clamping hub socket

Other gearbox models
Corrosion resistant design, food-grade lubrication

TP+ compared to the industry standard

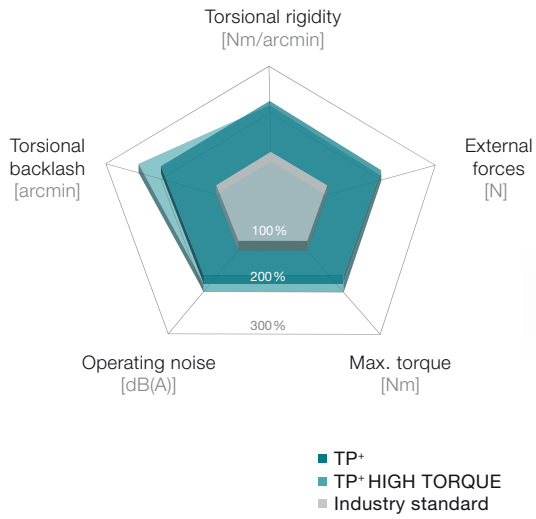

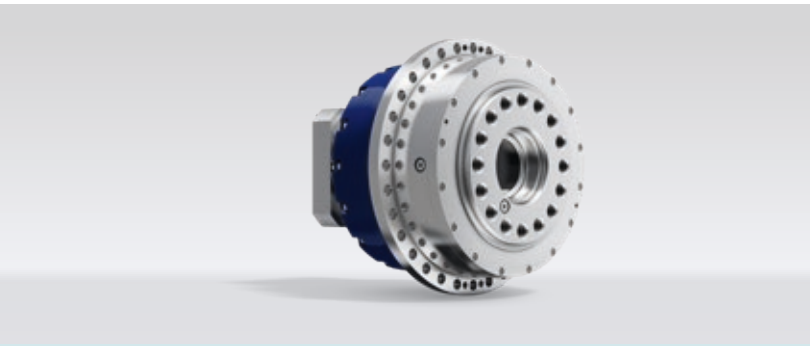

TP+ 2000 / 4000

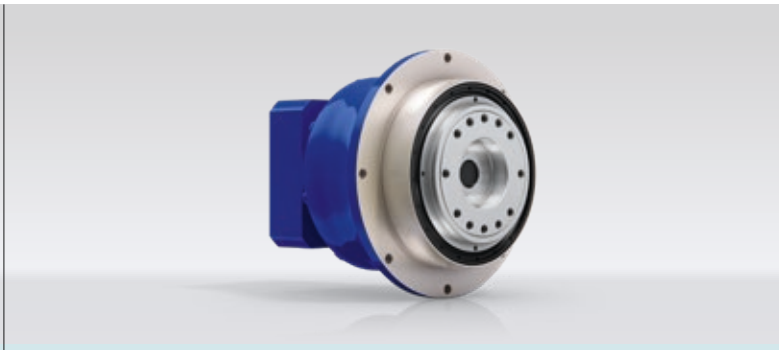

TP+ in corrosion resistant design

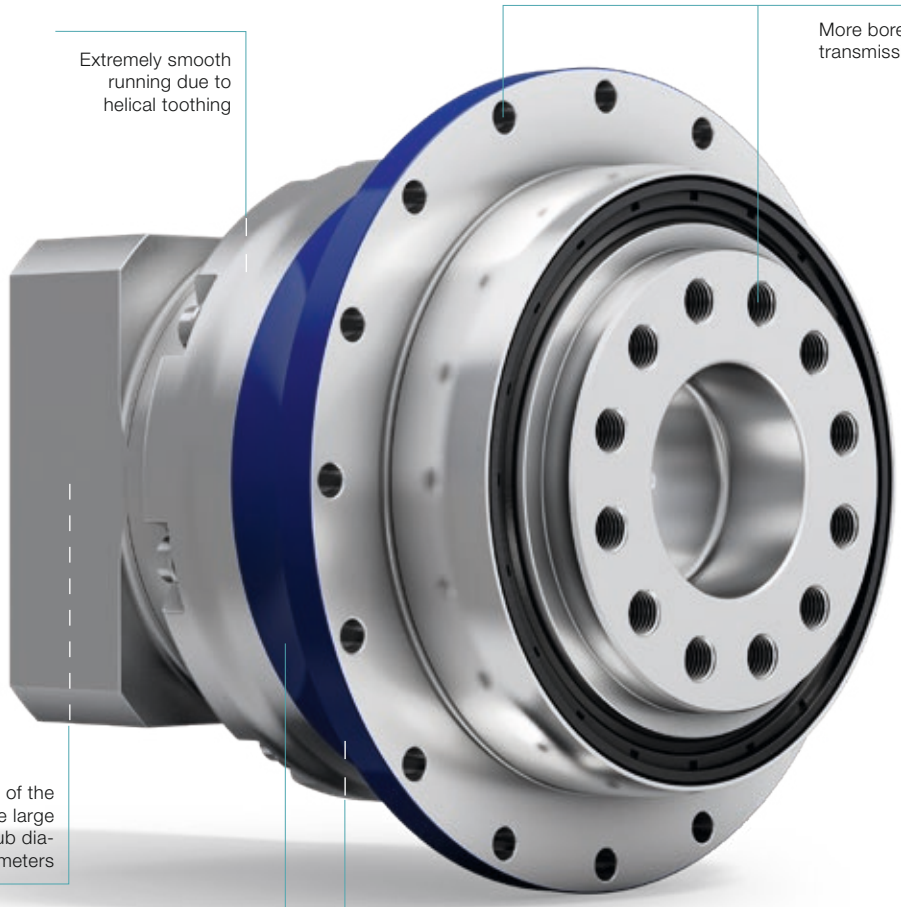

TP+ HIGH TORQUE

TP+ HIGH TORQUE with rack and pinion

premo TP Line

TP+ with mounting ring (Further information pages 326 – 327)

TP+ 004 MF 1-stage

				1-stage				
Ratio			i	**4**	**5**	**7**	**8**	**10**
Max. torque [a) b)]			T_{2a}	*Nm*	83	83	83	56	56
				in.lb	735	735	735	496	496
Max. acceleration torque [b)] (max. 1000 cycles per hour)			T_{2B}	*Nm*	66	66	66	42	42
				in.lb	584	584	584	372	372
Nominal torque (at n_{1N})			T_{2N}	*Nm*	27	27	26	26	27
				in.lb	239	236	226	230	237
Emergency stop torque [a) b)] (permitted 1000 times during the service life of the gearbox)			T_{2Not}	*Nm*	100	100	100	100	100
				in.lb	885	885	885	885	885
Permitted average input speed (at T_{2N} and 20 °C ambient temperature) [d)]			n_{1N}	*rpm*	3300	3300	4000	4000	4000
Max. input speed			n_{1Max}	*rpm*	7500	7500	7500	7500	7500
Mean no load running torque [b)] (at n_1 = 3000 rpm and 20 °C gearbox temperature)			T_{012}	*Nm*	0.56	0.48	0.37	0.37	0.31
				in.lb	5.0	4.2	3.3	3.3	2.7
Max. backlash			j_t	*arcmin*	Standard ≤ 4 / Reduced ≤ 2				
Torsional rigidity [b)]			C_{t21}	*Nm/arcmin*	12	12	11	8	8
				in.lb/arcmin	106	106	97	71	71
Tilting rigidity			C_{2K}	*Nm/arcmin*	85				
				in.lb/arcmin	752				
Max. axial force [c)]			F_{2AMax}	*N*	2119				
				lb_f	477				
Max. tilting moment			M_{2KMax}	*Nm*	110				
				in.lb	974				
Efficiency at full load			η	*%*	97				
Service life			L_h	*h*	> 20000				
Weight (incl. standard adapter plate)			m	*kg*	1.4				
				lb_m	3.1				
Operating noise (at reference ratio and reference speed – ratio-specific values available in cymex®)			L_{PA}	*dB(A)*	≤ 55				
Max. permitted housing temperature				*°C*	+90				
				F	194				
Ambient temperature				*°C*	–15 to +40				
				F	5 to 104				
Lubrication					Lubricated for life				
Direction of rotation					In- and output same direction				
Protection class					IP 65				
Metal bellows coupling (recommended product type – validate sizing with cymex®)					BCT-00015AAX-031.500				
Bore diameter of coupling on the application side				*mm*	X = 012.000 - 028.000				
Mass moment of inertia (relates to the drive) Clamping hub diameter [mm] Optimized mass inertia version available on request	B	11	J_1	*$kgcm^2$*	0.17	0.14	0.11	0.11	0.09
				10^{-3} in.lb.s^2	0.15	0.12	0.10	0.10	0.08
	C	14	J_1	*$kgcm^2$*	0.25	0.21	0.18	0.18	0.17
				10^{-3} in.lb.s^2	0.22	0.19	0.16	0.16	0.15
	E	19	J_1	*$kgcm^2$*	0.57	0.54	0.51	0.51	0.49
				10^{-3} in.lb.s^2	0.50	0.48	0.45	0.45	0.43

Please use our sizing software cymex® for a detailed sizing – **www.wittenstein-cymex.com**

[a)] At max. 10 % M_{2KMax}
[b)] Valid for standard clamping hub diameter
[c)] Refers to center of the output shaft or flange
[d)] Please reduce input speed at higher ambient temperatures

View A | View B

1-stage

Motor shaft diameter [mm]

up to 11 [4] (B) clamping hub diameter

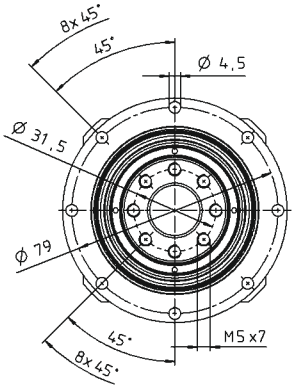

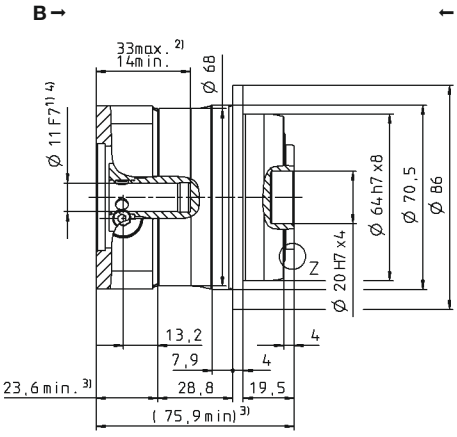

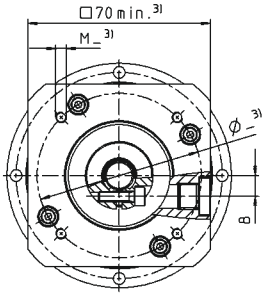

up to 14 [4] (C) [5] clamping hub diameter

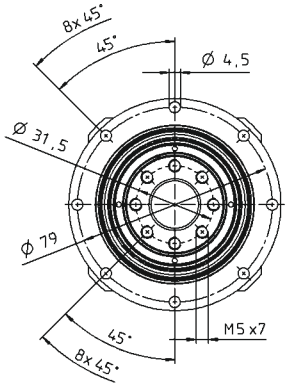

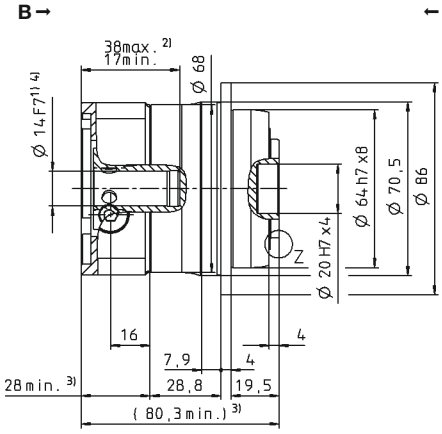

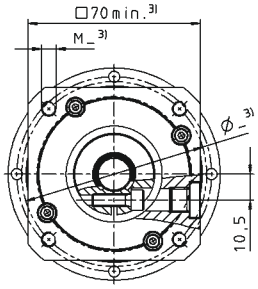

up to 19 [4] (E) clamping hub diameter

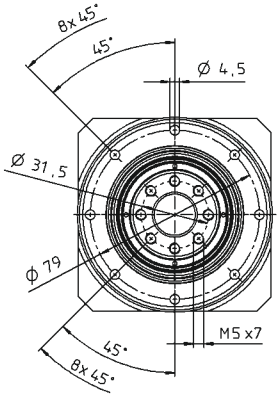

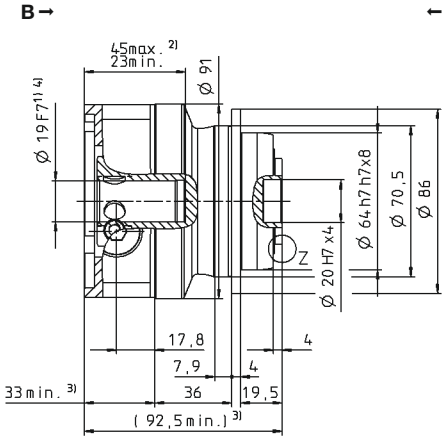

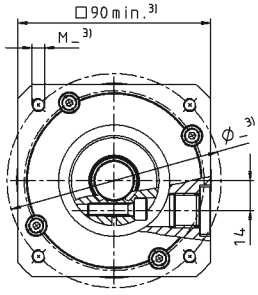

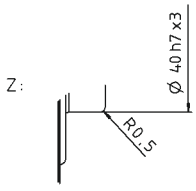

Non-tolerated dimensions are nominal dimensions

1) Check motor shaft fit
2) Min./Max. permissible motor shaft length. Longer motor shafts are possible, please contact alpha.
3) The dimensions depend on the motor
4) Smaller motor shaft diameter is compensated by a bushing with a minimum thickness of 1 mm
5) Standard clamping hub diameter

TP+ 004 MF 2-stage

			2-stage														
Ratio	*i*		**16**	**20**	**21**	**25**	**28**	**31**	**32**	**35**	**40**	**50**	**61**	**64**	**70**	**91**	**100**
Max. torque [a) b)]	T_{2a}	*Nm*	57	57	60	72	57	50	57	72	57	72	49	48	56	43	48
		in.lb	507	507	533	634	507	442	507	634	507	634	435	423	499	385	423
Max. acceleration torque [b)] (max. 1000 cycles per hour)	T_{2B}	*Nm*	57	57	48	66	57	48	57	66	57	66	49	42	56	38	42
		in.lb	507	507	425	584	504	425	507	584	507	584	434	372	496	336	372
Nominal torque (at n_{1N})	T_{2N}	*Nm*	39	41	32	41	45	36	39	45	46	48	39	34	45	31	34
		in.lb	342	365	286	361	403	320	343	399	406	421	341	297	399	272	297
Emergency stop torque [a) b)] (permitted 1000 times during the service life of the gearbox)	T_{2Not}	*Nm*	100	100	100	100	100	100	100	100	100	100	100	100	100	100	100
		in.lb	885	885	885	885	885	885	885	885	885	885	885	885	885	885	885
Permitted average input speed (at T_{2N} and 20 °C ambient temperature) [d)]	n_{1N}	*rpm*	4000	4000	4000	4000	4000	4000	4000	4000	4000	4800	5500	4800	5500	5500	5500
Max. input speed	n_{1Max}	*rpm*	7500	7500	7500	7500	7500	7500	7500	7500	7500	7500	7500	7500	7500	7500	7500
Mean no load running torque [b)] (at n_1 = 3000 rpm and 20 °C gearbox temperature)	T_{012}	*Nm*	0.28	0.23	0.24	0.22	0.21	0.22	0.21	0.17	0.18	0.17	0.16	0.17	0.17	0.15	0.16
		in.lb	2.5	2.0	2.1	1.9	1.9	1.9	1.9	1.5	1.6	1.5	1.4	1.5	1.5	1.3	1.4
Max. backlash	j_t	*arcmin*	Standard ≤ 4 / Reduced ≤ 2														
Torsional rigidity [b)]	C_{t21}	*Nm/arcmin*	12	12	10	12	12	9	12	12	11	12	9	12	11	7	8
		in.lb/arcmin	106	106	89	106	106	80	106	106	97	106	80	106	97	62	71
Tilting rigidity	C_{2K}	*Nm/arcmin*	85														
		in.lb/arcmin	752														
Max. axial force [c)]	F_{2AMax}	*N*	2119														
		lb_f	477														
Max. tilting moment	M_{2KMax}	*Nm*	110														
		in.lb	974														
Efficiency at full load	η	%	94														
Service life	L_h	*h*	> 20000														
Weight (incl. standard adapter plate)	*m*	*kg*	1.5														
		lb_m	3.3														
Operating noise (at reference ratio and reference speed – ratio-specific values available in cymex®)	L_{PA}	*dB(A)*	≤ 54														
Max. permitted housing temperature		°C	+90														
		F	194														
Ambient temperature		°C	–15 to +40														
		F	5 to 104														
Lubrication			Lubricated for life														
Direction of rotation			In- and output same direction														
Protection class			IP 65														
Metal bellows coupling (recommended product type – validate sizing with cymex®)			BCT-00015AAX-031.500														
Bore diameter of coupling on the application side		*mm*	X = 012.000 - 028.000														
Mass moment of inertia (relates to the drive) B 11	J_1	$kgcm^2$	0.078	0.070	0.074	0.068	0.062	0.072	0.062	0.061	0.057	0.057	0.058	0.060	0.056	0.057	0.056
		10^{-3} $in.lb.s^2$	0.069	0.062	0.065	0.060	0.055	0.064	0.055	0.054	0.050	0.050	0.051	0.053	0.050	0.050	0.050
Clamping hub diameter [mm] / Optimized mass inertia version available on request C 14	J_1	$kgcm^2$	0.17	0.17	0.17	0.16	0.16	0.17	0.16	0.16	0.15	0.15	0.15	0.16	0.15	0.15	0.15
		10^{-3} $in.lb.s^2$	0.15	0.15	0.15	0.15	0.14	0.15	0.14	0.14	0.14	0.14	0.14	0.14	0.13	0.14	0.13

Please use our sizing software cymex® for a detailed sizing – **www.wittenstein-cymex.com**

[a)] At max. 10 % M_{2KMax}
[b)] Valid for standard clamping hub diameter
[c)] Refers to center of the output shaft or flange
[d)] Please reduce input speed at higher ambient temperatures

2-stage

Motor shaft diameter [mm]

up to 11 [4] (B) [5] clamping hub diameter

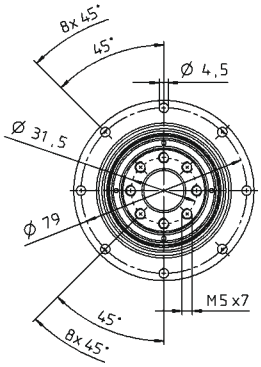

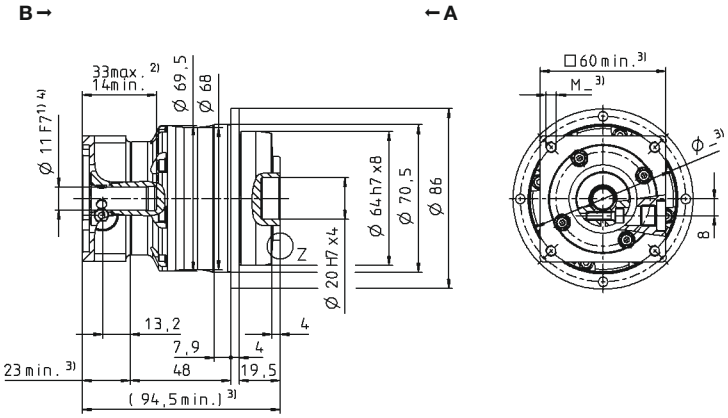

up to 14 [4] (C) clamping hub diameter

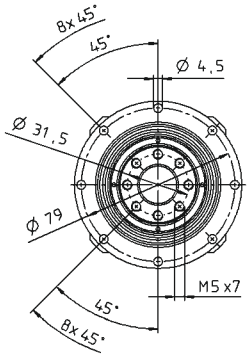

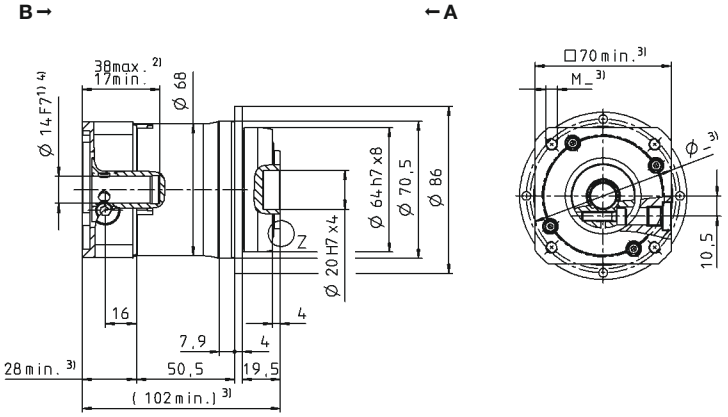

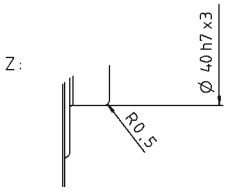

Non-tolerated dimensions are nominal dimensions
[1] Check motor shaft fit
[2] Min./Max. permissible motor shaft length. Longer motor shafts are possible, please contact alpha.
[3] The dimensions depend on the motor
[4] Smaller motor shaft diameter is compensated by a bushing with a minimum thickness of 1 mm
[5] Standard clamping hub diameter

				1-stage				
Ratio			i	**4**	**5**	**7**	**8**	**10**
Max. torque [a) b)]			T_{2a} Nm	185	210	210	168	168
			T_{2a} in.lb	1640	1859	1859	1487	1487
Max. acceleration torque [b)] (max. 1000 cycles per hour)			T_{2B} Nm	172	172	172	126	126
			T_{2B} in.lb	1522	1522	1522	1115	1115
Nominal torque (at n_{1N})			T_{2N} Nm	84	81	81	80	81
			T_{2N} in.lb	743	716	719	712	720
Emergency stop torque [a) b)] (permitted 1000 times during the service life of the gearbox)			T_{2Not} Nm	250	250	251	251	251
			T_{2Not} in.lb	2213	2213	2222	2222	2222
Permitted average input speed (at T_{2N} and 20 °C ambient temperature) [d)]			n_{1N} rpm	2600	2900	3100	3100	3100
Max. input speed			n_{1Max} rpm	7500	7500	7500	7500	7500
Mean no load running torque [b)] (at n_1 = 3000 rpm and 20 °C gearbox temperature)			T_{012} Nm	1.3	1.1	0.84	0.84	0.64
			T_{012} in.lb	12	9.5	7.4	7.4	5.7
Max. backlash			j_t arcmin	Standard ≤ 4 / Reduced ≤ 2				
Torsional rigidity [b)]			C_{t21} Nm/arcmin	32	33	30	23	23
			C_{t21} in.lb/arcmin	283	292	266	204	204
Tilting rigidity			C_{2K} Nm/arcmin	225				
			C_{2K} in.lb/arcmin	1991				
Max. axial force [c)]			F_{2AMax} N	2795				
			F_{2AMax} lb_f	629				
Max. tilting moment			M_{2KMax} Nm	270				
			M_{2KMax} in.lb	2390				
Efficiency at full load			η %	97				
Service life			L_h h	> 20000				
Weight (incl. standard adapter plate)			m kg	3.8				
			m lb_m	8.4				
Operating noise (at reference ratio and reference speed – ratio-specific values available in cymex®)			L_{PA} dB(A)	≤ 57				
Max. permitted housing temperature			°C	+90				
			F	194				
Ambient temperature			°C	–15 to +40				
			F	5 to 104				
Lubrication				Lubricated for life				
Direction of rotation				In- and output same direction				
Protection class				IP 65				
Metal bellows coupling (recommended product type – validate sizing with cymex®)				BCT-00060AAX-050.000				
Bore diameter of coupling on the application side			mm	X = 014.000 - 035.000				
Mass moment of inertia (relates to the drive) Clamping hub diameter [mm] Optimized mass inertia version available on request	C	14	J_1 kgcm²	0.78	0.62	0.48	0.48	0.40
			J_1 10^{-3} in.lb.s²	0.69	0.55	0.42	0.42	0.35
	E	19	J_1 kgcm²	0.95	0.79	0.64	0.64	0.57
			J_1 10^{-3} in.lb.s²	0.84	0.70	0.57	0.57	0.50
	G	24	J_1 kgcm²	2.32	2.16	2.02	2.02	1.94
			J_1 10^{-3} in.lb.s²	2.05	1.91	1.79	1.79	1.72

Please use our sizing software cymex® for a detailed sizing – **www.wittenstein-cymex.com**

a) At max. 10 % M_{2KMax}
b) Valid for standard clamping hub diameter
c) Refers to center of the output shaft or flange
d) Please reduce input speed at higher ambient temperatures

View A | View B

1-stage

Motor shaft diameter [mm]

up to 14 [4] (C) clamping hub diameter

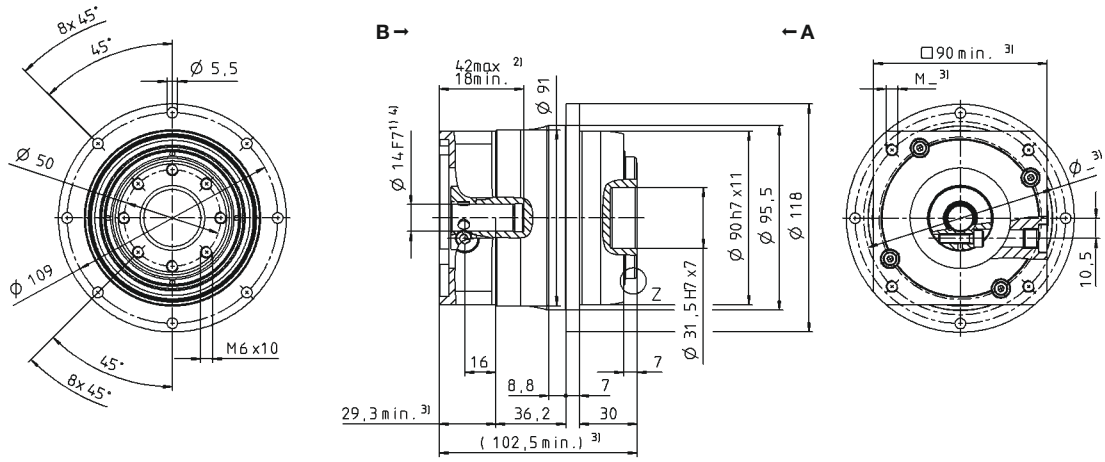

up to 19 [4] (E) [5] clamping hub diameter

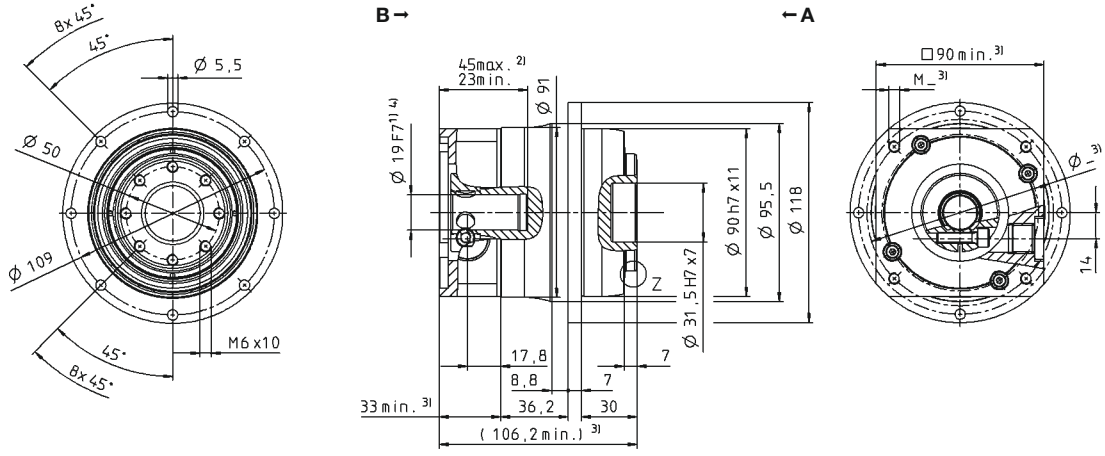

up to 24 [4] (G) clamping hub diameter

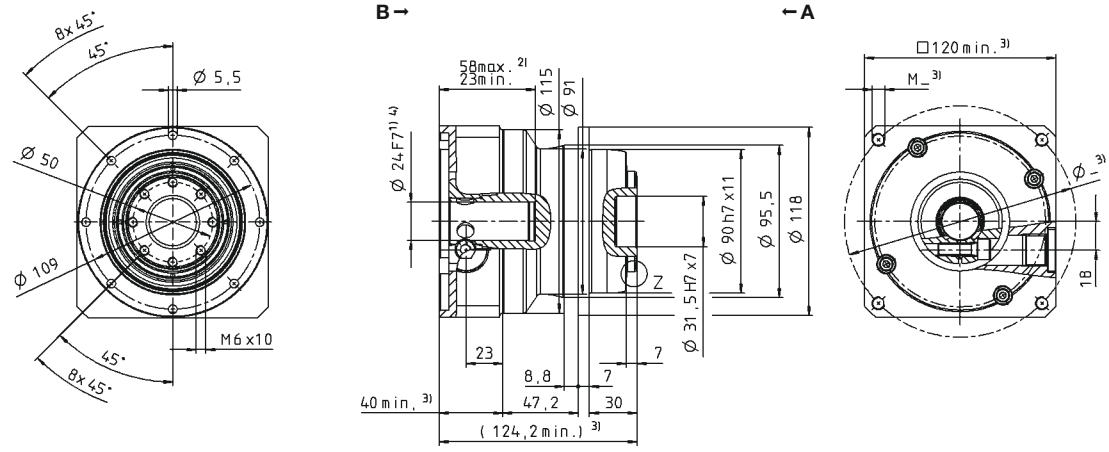

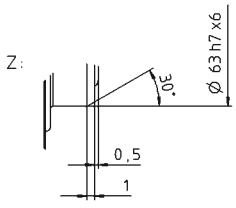

Non-tolerated dimensions are nominal dimensions

[1] Check motor shaft fit
[2] Min./Max. permissible motor shaft length. Longer motor shafts are possible, please contact alpha.
[3] The dimensions depend on the motor
[4] Smaller motor shaft diameter is compensated by a bushing with a minimum thickness of 1 mm
[5] Standard clamping hub diameter

TP+ 010 MF 2-stage

			2-stage														
Ratio	*i*		**16**	**20**	**21**	**25**	**28**	**31**	**32**	**35**	**40**	**50**	**61**	**64**	**70**	**91**	**100**
Max. torque [a) b)]	T_{2a}	*Nm*	157	126	133	158	157	121	157	158	154	158	121	105	157	96	105
		in.lb	1392	1118	1174	1398	1392	1071	1392	1398	1363	1398	1071	932	1392	848	932
Max. acceleration torque [b)] (max. 1000 cycles per hour)	T_{2B}	*Nm*	157	126	120	158	157	121	157	158	154	158	121	105	157	96	105
		in.lb	1392	1118	1062	1398	1392	1071	1392	1398	1363	1398	1071	932	1392	848	932
Nominal torque (at n_{1N})	T_{2N}	*Nm*	106	101	96	124	107	87	119	126	112	126	97	84	126	77	84
		in.lb	935	895	850	1097	945	770	1053	1118	987	1118	857	746	1114	678	746
Emergency stop torque [a) b)] (permitted 1000 times during the service life of the gearbox)	T_{2Not}	*Nm*	251	251	251	251	251	251	251	251	251	251	251	251	251	251	251
		in.lb	2222	2222	2222	2222	2222	2222	2222	2222	2222	2222	2222	2222	2222	2222	2222
Permitted average input speed (at T_{2N} and 20 °C ambient temperature) [d)]	n_{1N}	*rpm*	3500	3500	3500	3500	3500	3500	3500	3500	3500	3800	4500	3800	4500	4500	4500
Max. input speed	n_{1Max}	*rpm*	7500	7500	7500	7500	7500	7500	7500	7500	7500	7500	7500	7500	7500	7500	7500
Mean no load running torque [b)] (at n_1 = 3000 rpm and 20 °C gearbox temperature)	T_{012}	*Nm*	0.56	0.48	0.47	0.44	0.40	0.40	0.40	0.28	0.32	0.32	0.23	0.32	0.24	0.24	0.25
		in.lb	5.0	4.2	4.2	3.9	3.5	3.5	3.5	2.5	2.8	2.8	2.0	2.8	2.1	2.1	2.2
Max. backlash	j_t	*arcmin*	Standard ≤ 3 / Reduced ≤ 1														
Torsional rigidity [b)]	C_{t21}	*Nm/arcmin*	32	32	26	32	31	24	31	32	30	30	24	30	28	21	22
		in.lb/arcmin	283	283	230	283	274	212	274	283	266	266	212	266	248	186	195
Tilting rigidity	C_{2K}	*Nm/arcmin*	225														
		in.lb/arcmin	1991														
Max. axial force [c)]	F_{2AMax}	*N*	2795														
		lb_f	629														
Max. tilting moment	M_{2KMax}	*Nm*	270														
		in.lb	2390														
Efficiency at full load	η	*%*	94														
Service life	L_h	*h*	> 20000														
Weight (incl. standard adapter plate)	*m*	*kg*	3.6														
		lb_m	8.0														
Operating noise (at reference ratio and reference speed – ratio-specific values available in cymex®)	L_{PA}	*dB(A)*	≤ 55														
Max. permitted housing temperature		*°C*	+90														
		F	194														
Ambient temperature		*°C*	–15 to +40														
		F	5 to 104														
Lubrication			Lubricated for life														
Direction of rotation			In- and output same direction														
Protection class			IP 65														
Metal bellows coupling (recommended product type – validate sizing with cymex®)			BCT-00060AAX-050.000														
Bore diameter of coupling on the application side		*mm*	X = 014.000 - 035.000														
Mass moment of inertia (relates to the drive) B 11	J_1	$kgcm^2$	0.17	0.14	0.15	0.13	0.11	0.14	0.11	0.10	0.09	0.09	0.09	0.10	0.09	0.09	0.09
		10^{-3} $in.lb.s^2$	0.15	0.12	0.13	0.12	0.10	0.12	0.10	0.09	0.08	0.08	0.08	0.09	0.08	0.08	0.08
Clamping hub diameter [mm] C 14	J_1	$kgcm^2$	0.24	0.21	0.22	0.20	0.18	0.21	0.18	0.18	0.17	0.17	0.17	0.17	0.16	0.17	0.16
		10^{-3} $in.lb.s^2$	0.21	0.19	0.20	0.18	0.16	0.18	0.16	0.16	0.15	0.15	0.15	0.15	0.15	0.15	0.14
Optimized mass inertia version available on request E 19	J_1	$kgcm^2$	0.56	0.53	0.55	0.53	0.51	0.53	0.51	0.50	0.49	0.49	0.49	0.52	0.49	0.49	0.49
		10^{-3} $in.lb.s^2$	0.50	0.47	0.48	0.47	0.45	0.47	0.45	0.44	0.43	0.43	0.43	0.46	0.43	0.43	0.43

Please use our sizing software cymex® for a detailed sizing – **www.wittenstein-cymex.com**

a) At max. 10 % M_{2KMax}
b) Valid for standard clamping hub diameter
c) Refers to center of the output shaft or flange
d) Please reduce input speed at higher ambient temperatures

View A | View B

2-stage

Motor shaft diameter [mm]

up to 11 [4] (B) clamping hub diameter

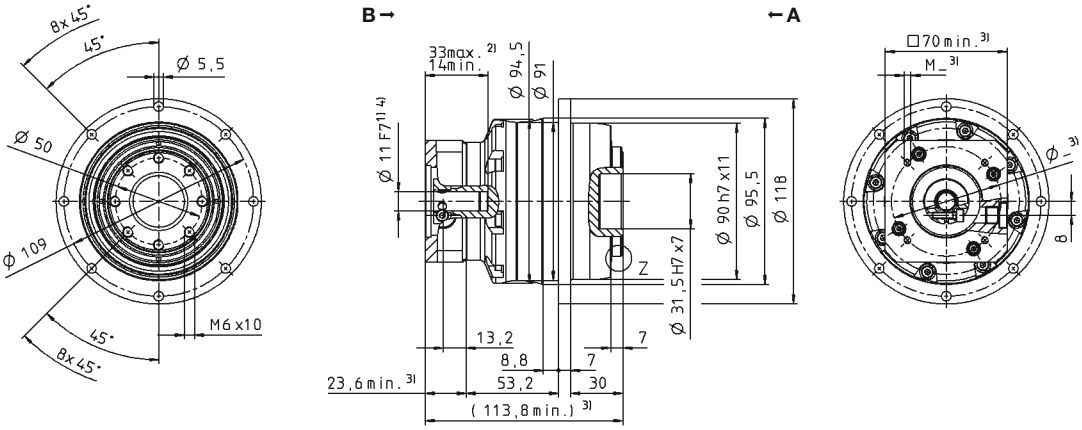

up to 14 [4] (C) [5] clamping hub diameter

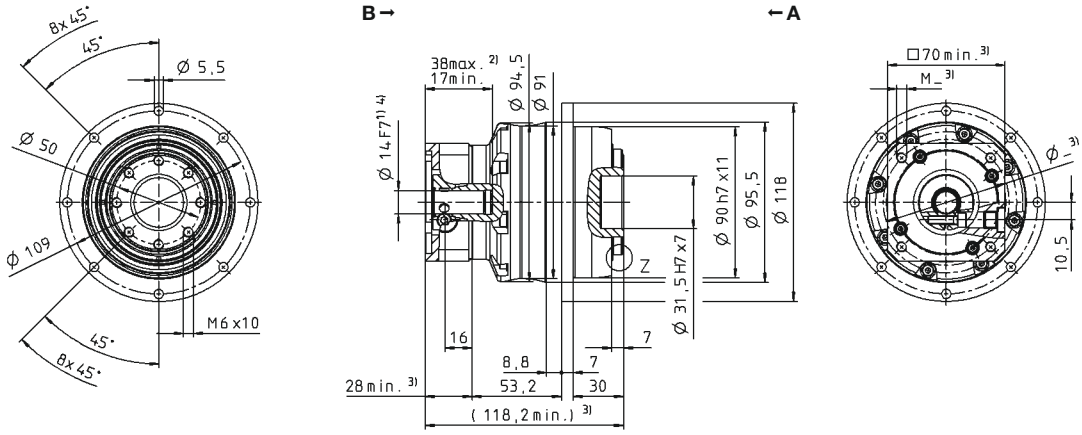

up to 19 [4] (E) clamping hub diameter

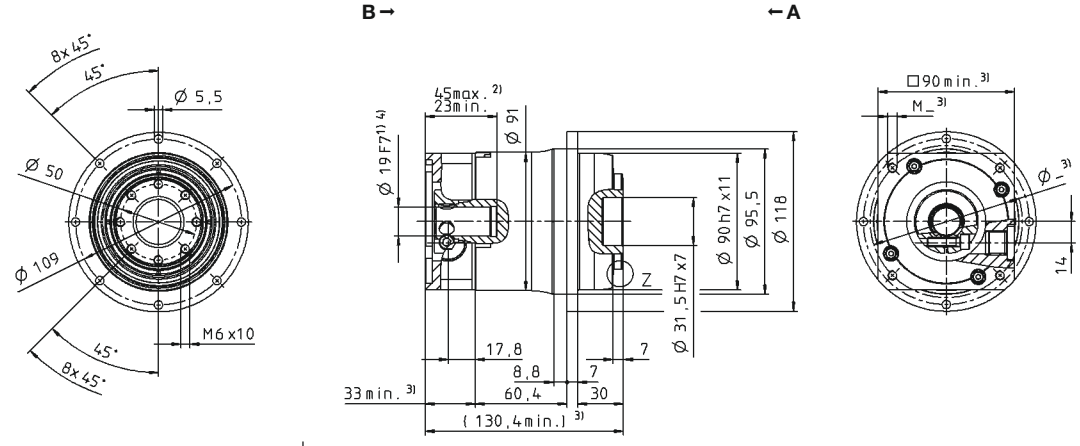

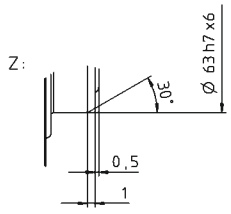

Non-tolerated dimensions are nominal dimensions
[1] Check motor shaft fit
[2] Min./Max. permissible motor shaft length. Longer motor shafts are possible, please contact alpha.
[3] The dimensions depend on the motor
[4] Smaller motor shaft diameter is compensated by a bushing with a minimum thickness of 1 mm
[5] Standard clamping hub diameter

TP+ 025 MF 1-stage

				1-stage				
Ratio			i	**4**	**5**	**7**	**8**	**10**
Max. torque [a) b)]			T_{2a} Nm	352	380	352	352	352
			T_{2a} in.lb	3115	3363	3115	3115	3115
Max. acceleration torque [b)] (max. 1000 cycles per hour)			T_{2B} Nm	352	380	352	318	318
			T_{2B} in.lb	3115	3363	3115	2815	2815
Nominal torque (at n_{1N})			T_{2N} Nm	175	169	172	172	180
			T_{2N} in.lb	1548	1498	1524	1521	1591
Emergency stop torque [a) b)] (permitted 1000 times during the service life of the gearbox)			T_{2Not} Nm	625	625	625	625	625
			T_{2Not} in.lb	5532	5532	5532	5532	5532
Permitted average input speed (at T_{2N} and 20 °C ambient temperature) [d)]			n_{1N} rpm	2300	2500	2500	2500	2500
Max. input speed			n_{1Max} rpm	5500	5500	5500	5500	5500
Mean no load running torque [b)] (at n_1 = 3000 rpm and 20 °C gearbox temperature)			T_{012} Nm	2.8	2.3	1.7	1.7	1.2
			T_{012} in.lb	25	20	15	15	10
Max. backlash			j_t arcmin	Standard ≤ 3 / Reduced ≤ 1				
Torsional rigidity [b)]			C_{t21} Nm/arcmin	80	86	76	62	62
			C_{t21} in.lb/arcmin	708	761	673	549	549
Tilting rigidity			C_{2K} Nm/arcmin	550				
			C_{2K} in.lb/arcmin	4868				
Max. axial force [c)]			F_{2AMax} N	4800				
			F_{2AMax} lb_f	1080				
Max. tilting moment			M_{2KMax} Nm	440				
			M_{2KMax} in.lb	3894				
Efficiency at full load			η %	97				
Service life			L_h h	> 20000				
Weight (incl. standard adapter plate)			m kg	6.5				
			m lb_m	14.4				
Operating noise (at reference ratio and reference speed – ratio-specific values available in cymex®)			L_{PA} dB(A)	≤ 61				
Max. permitted housing temperature			°C	+90				
			F	194				
Ambient temperature			°C	–15 to +40				
			F	5 to 104				
Lubrication				Lubricated for life				
Direction of rotation				In- and output same direction				
Protection class				IP 65				
Metal bellows coupling (recommended product type – validate sizing with cymex®)				BCT-00150AAX-063.000				
Bore diameter of coupling on the application side			mm	X = 019.000 - 042.000				
Mass moment of inertia (relates to the drive) Clamping hub diameter [mm] Optimized mass inertia version available on request	E	19	J_1 kgcm²	2.59	2.11	1.69	1.69	1.45
			J_1 10^{-3} in.lb.s²	2.29	1.87	1.50	1.50	1.28
	G	24	J_1 kgcm²	3.28	2.80	2.38	2.38	2.14
			J_1 10^{-3} in.lb.s²	2.90	2.48	2.11	2.11	1.89
	H	28	J_1 kgcm²	2.89	2.41	1.99	1.99	1.75
			J_1 10^{-3} in.lb.s²	2.56	2.13	1.76	1.76	1.55
	K	38	J_1 kgcm²	10.3	9.87	9.45	9.45	9.21
			J_1 10^{-3} in.lb.s²	9.12	8.73	8.36	8.36	8.15

Please use our sizing software cymex® for a detailed sizing – **www.wittenstein-cymex.com**

[a)] At max. 10 % M_{2KMax}
[b)] Valid for standard clamping hub diameter
[c)] Refers to center of the output shaft or flange
[d)] Please reduce input speed at higher ambient temperatures

View A | View B

1-stage

Motor shaft diameter [mm]

up to 19 [4] (E) clamping hub diameter

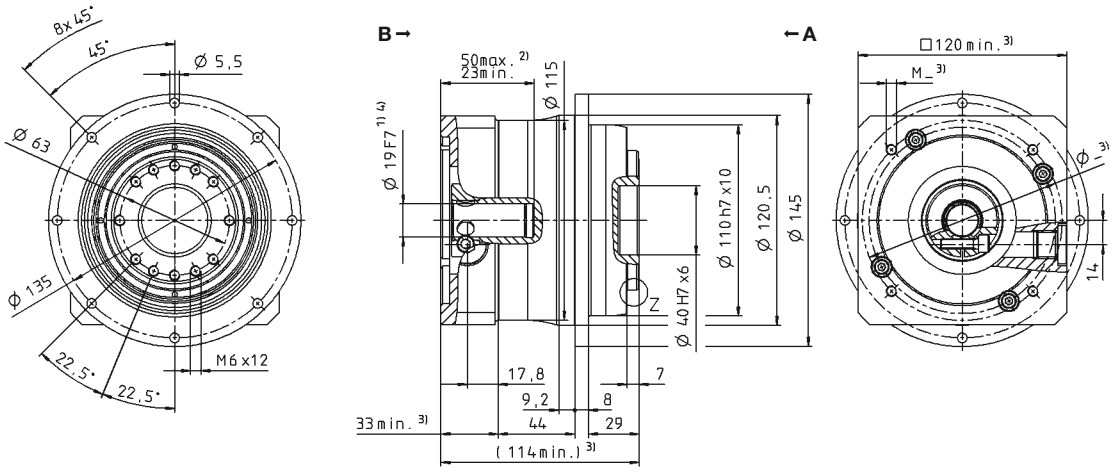

up to 24/28 [4] (G [5]/H) clamping hub diameter

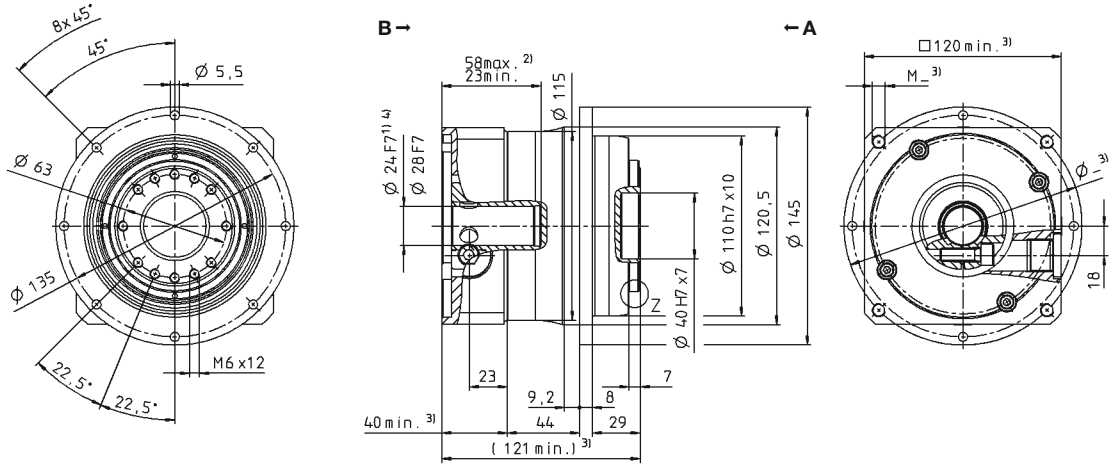

up to 38 [4] (K) clamping hub diameter

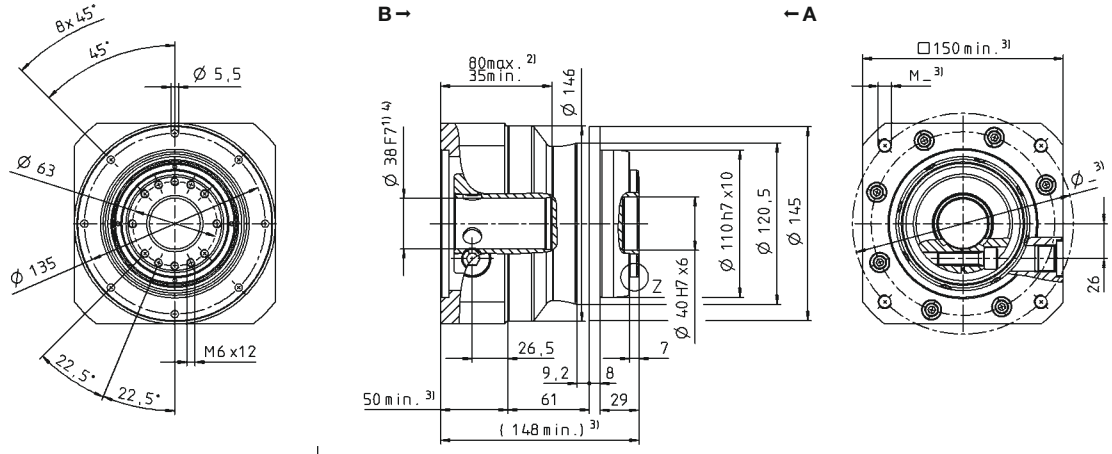

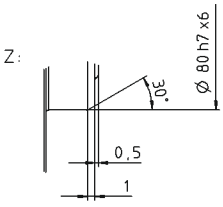

Non-tolerated dimensions are nominal dimensions

[1] Check motor shaft fit

[2] Min./Max. permissible motor shaft length. Longer motor shafts are possible, please contact alpha.

[3] The dimensions depend on the motor

[4] Smaller motor shaft diameter is compensated by a bushing with a minimum thickness of 1 mm

[5] Standard clamping hub diameter

TP+ 025 MF 2-stage

			2-stage														
Ratio	i		**16**	**20**	**21**	**25**	**28**	**31**	**32**	**35**	**40**	**50**	**61**	**64**	**70**	**91**	**100**
Max. torque [a) b)]	T_{2a}	*Nm*	352	352	352	380	352	352	352	380	352	380	352	352	352	352	352
		in.lb	3115	3115	3115	3363	3115	3115	3115	3363	3115	3363	3115	3115	3115	3115	3115
Max. acceleration torque [b)] (max. 1000 cycles per hour)	T_{2B}	*Nm*	352	352	330	380	352	330	352	380	352	380	308	292	352	275	292
		in.lb	3115	3115	2921	3363	3115	2921	3115	3363	3115	3363	2726	2584	3115	2434	2584
Nominal torque (at n_{1N})	T_{2N}	*Nm*	250	267	211	265	282	231	251	294	282	304	246	233	282	220	233
		in.lb	2213	2366	1872	2348	2492	2047	2220	2598	2492	2691	2181	2064	2492	1947	2064
Emergency stop torque [a) b)] (permitted 1000 times during the service life of the gearbox)	T_{2Not}	*Nm*	625	625	625	625	625	625	625	625	625	625	625	625	625	625	625
		in.lb	5532	5532	5532	5532	5532	5532	5532	5532	5532	5532	5532	5532	5532	5532	5532
Permitted average input speed (at T_{2N} and 20 °C ambient temperature) [d)]	n_{1N}	*rpm*	2800	2800	2800	2800	2800	2800	2800	2800	2800	3100	3500	3100	3500	4200	4200
Max. input speed	n_{1Max}	*rpm*	7500	7500	7500	7500	7500	7500	7500	7500	7500	7500	7500	7500	7500	7500	7500
Mean no load running torque [b)] (at n_1 = 3000 rpm and 20 °C gearbox temperature)	T_{012}	*Nm*	1.2	1.0	1.1	0.90	0.80	0.84	0.80	0.60	0.59	0.50	0.48	0.50	0.42	0.48	0.38
		in.lb	10	8.9	9.9	8.0	7.1	7.4	7.1	5.3	5.2	4.4	4.2	4.4	3.7	4.2	3.4
Max. backlash	j_t	*arcmin*	Standard ≤ 3 / Reduced ≤ 1														
Torsional rigidity [b)]	C_{t21}	*Nm/arcmin*	81	81	70	83	80	54	80	82	76	80	61	80	71	55	60
		in.lb/arcmin	717	717	620	735	708	478	708	726	673	708	540	708	628	487	531
Tilting rigidity	C_{2K}	*Nm/arcmin*	550														
		in.lb/arcmin	4868														
Max. axial force [c)]	F_{2AMax}	*N*	4800														
		lb_f	1080														
Max. tilting moment	M_{2KMax}	*Nm*	440														
		in.lb	3894														
Efficiency at full load	η	*%*	94														
Service life	L_h	*h*	> 20000														
Weight (incl. standard adapter plate)	m	*kg*	6.7														
		lb_m	14.8														
Operating noise (at reference ratio and reference speed – ratio-specific values available in cymex®)	L_{PA}	*dB(A)*	≤ 58														
Max. permitted housing temperature		*°C*	+90														
		F	194														
Ambient temperature		*°C*	–15 to +40														
		F	5 to 104														
Lubrication			Lubricated for life														
Direction of rotation			In- and output same direction														
Protection class			IP 65														
Metal bellows coupling (recommended product type – validate sizing with cymex®)			BCT-00150AAX-063.000														
Bore diameter of coupling on the application side		*mm*	X = 019.000 - 042.000														
Mass moment of inertia (relates to the drive) — C 14	J_1	*$kgcm^2$*	0.66	0.55	0.60	0.53	0.44	0.55	0.44	0.43	0.38	0.38	0.39	0.40	0.37	0.38	0.37
		10^{-3} in.lb.s²	0.58	0.48	0.53	0.47	0.39	0.49	0.39	0.38	0.34	0.33	0.34	0.36	0.33	0.34	0.33
Mass moment of inertia (relates to the drive) — E 19	J_1	*$kgcm^2$*	0.83	0.71	0.77	0.70	0.61	0.72	0.61	0.60	0.55	0.55	0.55	0.57	0.54	0.55	0.54
		10^{-3} in.lb.s²	0.73	0.63	0.68	0.62	0.54	0.64	0.54	0.53	0.49	0.48	0.49	0.50	0.48	0.48	0.48
Mass moment of inertia (relates to the drive) — G 24	J_1	*$kgcm^2$*	2.20	2.08	2.14	2.07	1.98	2.09	1.98	1.97	1.92	1.92	1.92	2.00	1.91	1.92	1.91
		10^{-3} in.lb.s²	1.95	1.84	1.89	1.83	1.75	1.85	1.75	1.74	1.70	1.70	1.70	1.77	1.69	1.70	1.69
Mass moment of inertia (relates to the drive) — H 28	J_1	*$kgcm^2$*	2.00	1.91	1.96	1.89	1.82	1.85	1.89	1.81	1.76	1.76	1.76	1.83	1.75	1.75	1.75
		10^{-3} in.lb.s²	1.77	1.69	1.73	1.67	1.61	1.64	1.67	1.60	1.56	1.56	1.56	1.62	1.55	1.55	1.55

Clamping hub diameter [mm]

Optimized mass inertia version available on request

Please use our sizing software cymex® for a detailed sizing – **www.wittenstein-cymex.com**

[a)] At max. 10 % M_{2KMax}
[b)] Valid for standard clamping hub diameter
[c)] Refers to center of the output shaft or flange
[d)] Please reduce input speed at higher ambient temperatures

View A | View B

2-stage

Motor shaft diameter [mm]

up to 14 [4] (C) clamping hub diameter

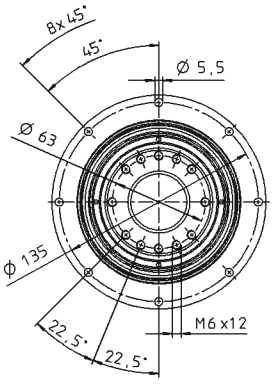

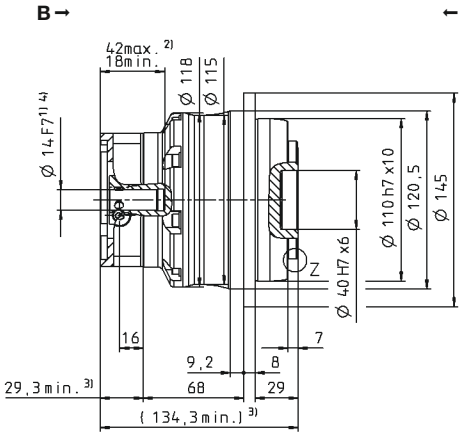

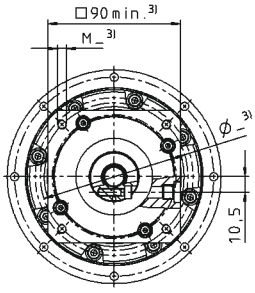

up to 19 [4] (E) [5] clamping hub diameter

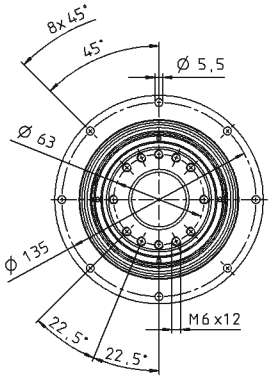

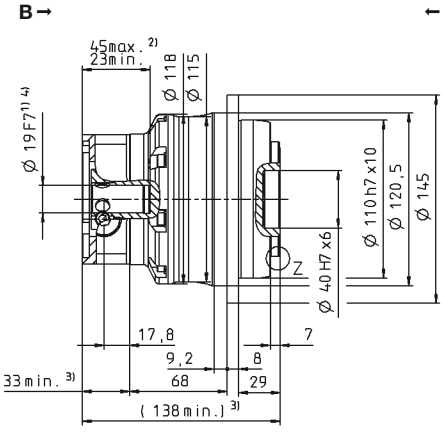

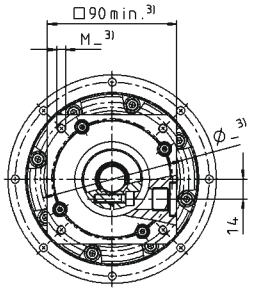

up to 24/28 [4] (G/H) clamping hub diameter

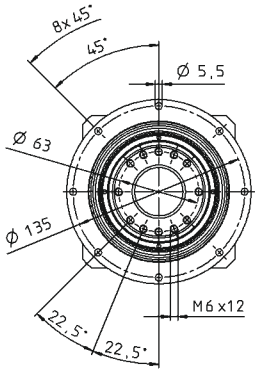

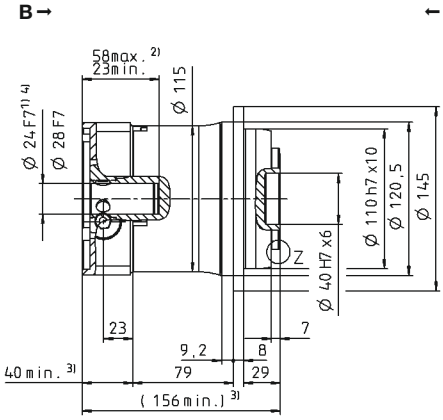

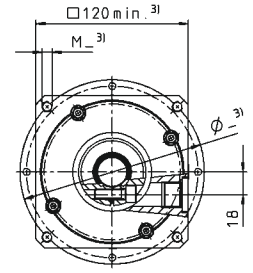

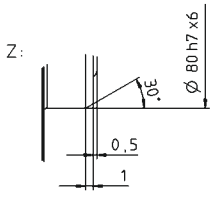

Non-tolerated dimensions are nominal dimensions
[1] Check motor shaft fit
[2] Min./Max. permissible motor shaft length. Longer motor shafts are possible, please contact alpha.
[3] The dimensions depend on the motor
[4] Smaller motor shaft diameter is compensated by a bushing with a minimum thickness of 1 mm
[5] Standard clamping hub diameter

TP+ 050 MF 1-stage

				1-stage				
Ratio			i	**4**	**5**	**7**	**8**	**10**
Max. torque [a) b)]			T_{2a}	Nm	992	992	868	720	720
				in.lb	8780	8780	7686	6373	6373
Max. acceleration torque [b)] (max. 1000 cycles per hour)			T_{2B}	Nm	840	840	840	648	648
				in.lb	7435	7435	7435	5735	5735
Nominal torque (at n_{1N})			T_{2N}	Nm	345	337	322	316	331
				in.lb	3052	2987	2854	2796	2928
Emergency stop torque [a) b)] (permitted 1000 times during the service life of the gearbox)			T_{2Not}	Nm	1250	1250	1250	1250	1250
				in.lb	11064	11064	11064	11064	11064
Permitted average input speed (at T_{2N} and 20 °C ambient temperature) [d)]			n_{1N}	rpm	1900	2000	2500	2500	2500
Max. input speed			n_{1Max}	rpm	5000	5000	5000	5000	5000
Mean no load running torque [b)] (at n_1 = 3000 rpm and 20 °C gearbox temperature)			T_{012}	Nm	6.5	5.3	3.8	3.8	2.6
				in.lb	57	47	33	33	23
Max. backlash			j_t	arcmin	Standard ≤ 3 / Reduced ≤ 1				
Torsional rigidity [b)]			C_{t21}	Nm/arcmin	190	187	159	123	123
				in.lb/arcmin	1682	1655	1407	1089	1089
Tilting rigidity			C_{2K}	Nm/arcmin	560				
				in.lb/arcmin	4956				
Max. axial force [c)]			F_{2AMax}	N	6130				
				lb_f	1379				
Max. tilting moment			M_{2KMax}	Nm	1335				
				in.lb	11816				
Efficiency at full load			η	%	97				
Service life			L_h	h	> 20000				
Weight (incl. standard adapter plate)			m	kg	14				
				lb_m	30.9				
Operating noise (at reference ratio and reference speed – ratio-specific values available in cymex®)			L_{PA}	dB(A)	≤ 64				
Max. permitted housing temperature				°C	+90				
				F	194				
Ambient temperature				°C	–15 to +40				
				F	5 to 104				
Lubrication					Lubricated for life				
Direction of rotation					In- and output same direction				
Protection class					IP 65				
Metal bellows coupling (recommended product type – validate sizing with cymex®)					BCT-00300AAX-080.000				
Bore diameter of coupling on the application side				mm	X = 024.000 - 060.000				
Mass moment of inertia (relates to the drive) Clamping hub diameter [mm] Optimized mass inertia version available on request	G	24	J_1	$kgcm^2$	9.47	7.85	6.39	6.39	5.54
				10^{-3} in.lb.s²	8.38	6.95	5.66	5.66	4.90
	I	32	J_1	$kgcm^2$	12.6	11.0	9.55	9.55	8.10
				10^{-3} in.lb.s²	11.2	9.74	8.45	8.45	7.17
	K	38	J_1	$kgcm^2$	13.7	12.1	10.6	10.6	9.78
				10^{-3} in.lb.s²	12.1	10.7	9.38	9.38	8.66
	M	48	J_1	$kgcm^2$	28.3	26.7	25.3	25.3	24.4
				10^{-3} in.lb.s²	25.1	23.6	22.4	22.4	21.6

Please use our sizing software cymex® for a detailed sizing – **www.wittenstein-cymex.com**

a) At max. 10 % M_{2KMax}
b) Valid for standard clamping hub diameter
c) Refers to center of the output shaft or flange
d) Please reduce input speed at higher ambient temperatures

View A | View B

1-stage

Motor shaft diameter [mm]

up to 24 [4] (G) clamping hub diameter

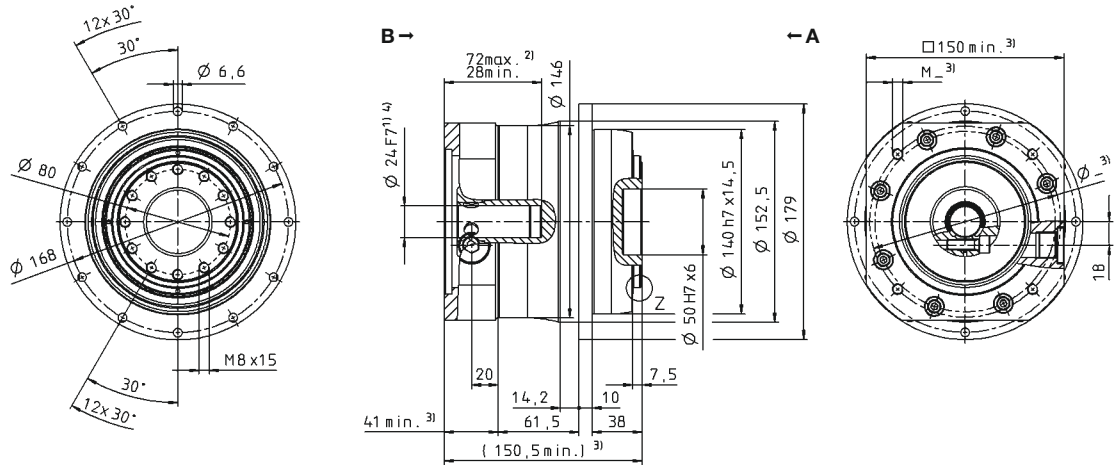

up to 32/38 [4] (I/K [5]) clamping hub diameter

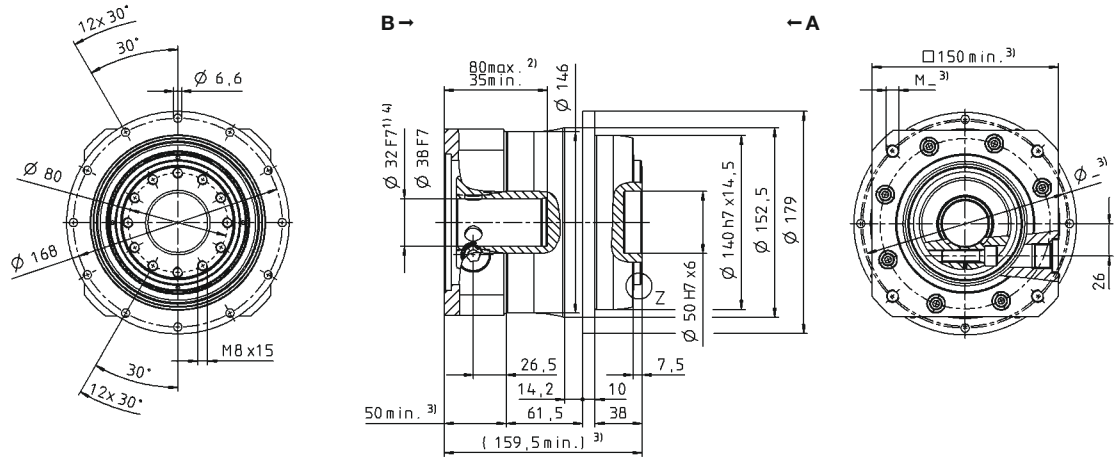

up to 48 [4] (M) clamping hub diameter

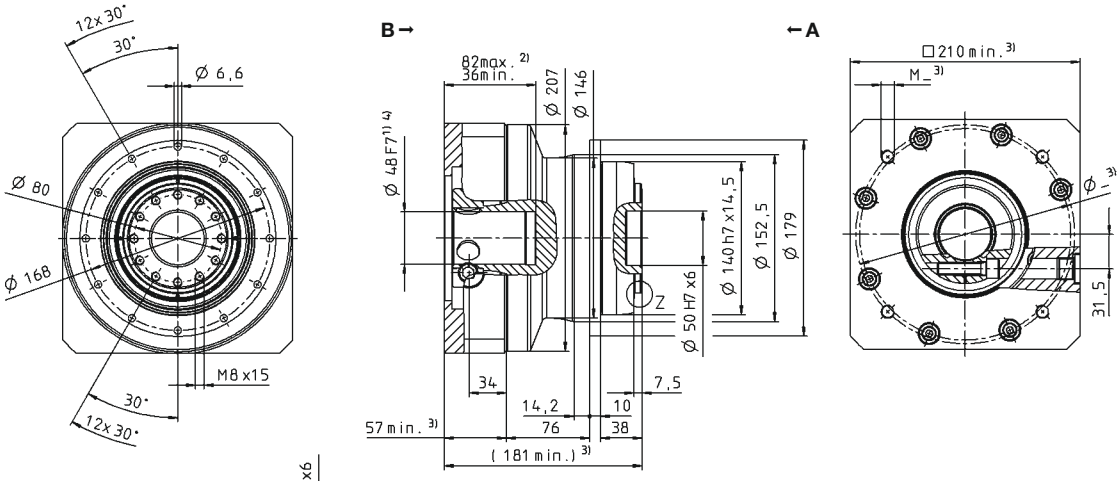

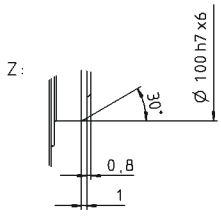

Non-tolerated dimensions are nominal dimensions
1) Check motor shaft fit
2) Min./Max. permissible motor shaft length. Longer motor shafts are possible, please contact alpha.
3) The dimensions depend on the motor
4) Smaller motor shaft diameter is compensated by a bushing with a minimum thickness of 1 mm
5) Standard clamping hub diameter

TP+ 050 MF 2-stage

			2-stage														
Ratio	*i*		**16**	**20**	**21**	**25**	**28**	**31**	**32**	**35**	**40**	**50**	**61**	**64**	**70**	**91**	**100**
Max. torque [a) b)]	T_{2a}	*Nm*	825	825	660	825	825	682	825	825	825	825	605	594	770	550	594
		in.lb	7302	7302	5842	7302	7302	6036	7302	7302	7302	7302	5355	5257	6815	4868	5257
Max. acceleration torque [b)] (max. 1000 cycles per hour)	T_{2B}	*Nm*	825	825	660	825	825	682	825	825	825	825	605	594	770	550	594
		in.lb	7302	7302	5842	7302	7302	6036	7302	7302	7302	7302	5355	5257	6815	4868	5257
Nominal torque (at n_{1N})	T_{2N}	*Nm*	461	493	393	489	545	431	464	541	607	585	425	475	598	440	475
		in.lb	4078	4361	3476	4332	4824	3812	4104	4792	5370	5179	3765	4206	5291	3894	4206
Emergency stop torque [a) b)] (permitted 1000 times during the service life of the gearbox)	T_{2Not}	*Nm*	1250	1250	1250	1250	1250	1250	1250	1250	1250	1250	1250	1250	1250	1250	1250
		in.lb	11064	11064	11064	11064	11064	11064	11064	11064	11064	11064	11064	11064	11064	11064	11064
Permitted average input speed (at T_{2N} and 20 °C ambient temperature) [d)]	n_{1N}	*rpm*	2900	2900	2900	2900	2900	2900	2900	2900	2900	3200	3200	3200	3200	3900	3900
Max. input speed	n_{1Max}	*rpm*	6250	6250	6250	6250	6250	6250	6250	6250	6250	6250	6250	6250	6250	6250	6250
Mean no load running torque [b)] (at n_1 = 3000 rpm and 20 °C gearbox temperature)	T_{012}	*Nm*	2.8	2.4	2.2	2.6	2.0	1.9	2.0	1.5	1.5	1.2	1.0	1.2	1.1	0.96	0.88
		in.lb	25	22	20	23	17	17	17	14	13	11	8.9	11	9.9	8.5	7.8
Max. backlash	j_t	*arcmin*	Standard ≤ 3 / Reduced ≤ 1														
Torsional rigidity [b)]	C_{t21}	*Nm/arcmin*	180	185	145	180	180	130	180	175	175	175	123	175	145	100	115
		in.lb/arcmin	1593	1637	1283	1593	1593	1151	1593	1549	1549	1549	1089	1549	1283	885	1018
Tilting rigidity	C_{2K}	*Nm/arcmin*	560														
		in.lb/arcmin	4956														
Max. axial force [c)]	F_{2AMax}	*N*	6130														
		lb_f	1379														
Max. tilting moment	M_{2KMax}	*Nm*	1379														
		in.lb	11816														
Efficiency at full load	η	%	94														
Service life	L_h	*h*	> 20000														
Weight (incl. standard adapter plate)	*m*	*kg*	14.1														
		lb_m	31.2														
Operating noise (at reference ratio and reference speed – ratio-specific values available in cymex®)	L_{PA}	*dB(A)*	≤ 58														
Max. permitted housing temperature		*°C*	+90														
		F	194														
Ambient temperature		*°C*	–15 to +40														
		F	5 to 104														
Lubrication			Lubricated for life														
Direction of rotation			In- and output same direction														
Protection class			IP 65														
Metal bellows coupling (recommended product type – validate sizing with cymex®)			BCT-00300AAX-080.000														
Bore diameter of coupling on the application side		*mm*	X = 024.000 - 060.000														
Mass moment of inertia (relates to the drive) E 19	J_1	$kgcm^2$	2.53	2.08	2.30	2.01	1.67	2.12	1.67	1.64	1.44	1.42	1.46	1.51	1.41	1.43	1.40
		10^{-3} $in.lb.s^2$	2.24	1.84	2.04	1.78	1.48	1.88	1.48	1.45	1.27	1.26	1.29	1.34	1.25	1.27	1.24
Clamping hub diameter [mm] G 24	J_1	$kgcm^2$	3.22	2.77	2.99	2.70	2.37	2.81	2.37	2.33	2.13	2.12	2.15	2.20	2.10	2.12	2.09
		10^{-3} $in.lb.s^2$	2.85	2.45	2.65	2.39	2.10	2.49	2.10	2.06	1.89	1.88	1.90	1.95	1.86	1.88	1.85
Optimized mass inertia version available on request K 38	J_1	$kgcm^2$	10.3	9.83	10.1	9.77	9.43	9.88	9.43	9.40	9.20	9.18	9.22	9.50	9.17	9.19	9.16
		10^{-3} $in.lb.s^2$	9.12	8.70	8.94	8.65	8.35	8.74	8.35	8.32	8.14	8.12	8.16	8.41	8.12	8.13	8.11

Please use our sizing software cymex® for a detailed sizing – **www.wittenstein-cymex.com**

a) At max. 10 % M_{2KMax}
b) Valid for standard clamping hub diameter
c) Refers to center of the output shaft or flange
d) Please reduce input speed at higher ambient temperatures

View A | View B

2-stage

Motor shaft diameter [mm]

up to 19 [4] (E) clamping hub diameter

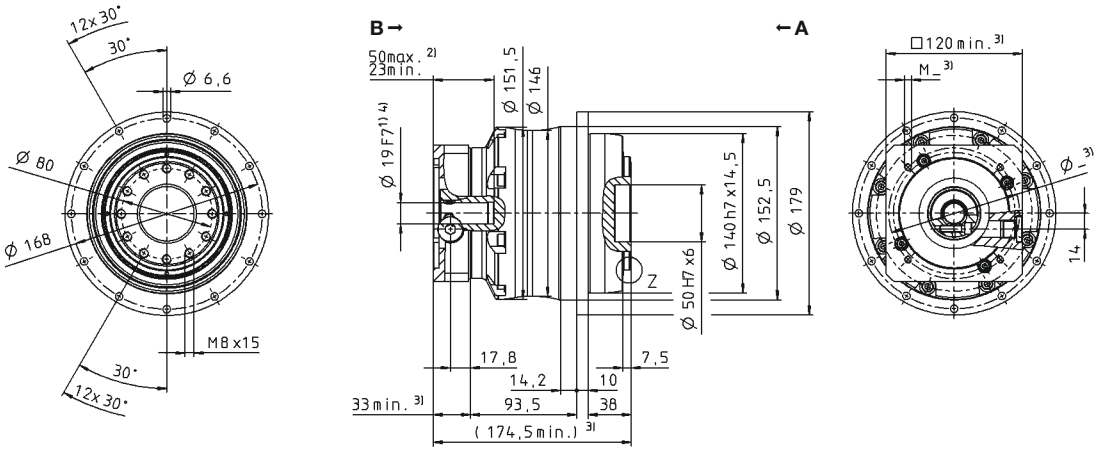

up to 24 [4] (G) [5] clamping hub diameter

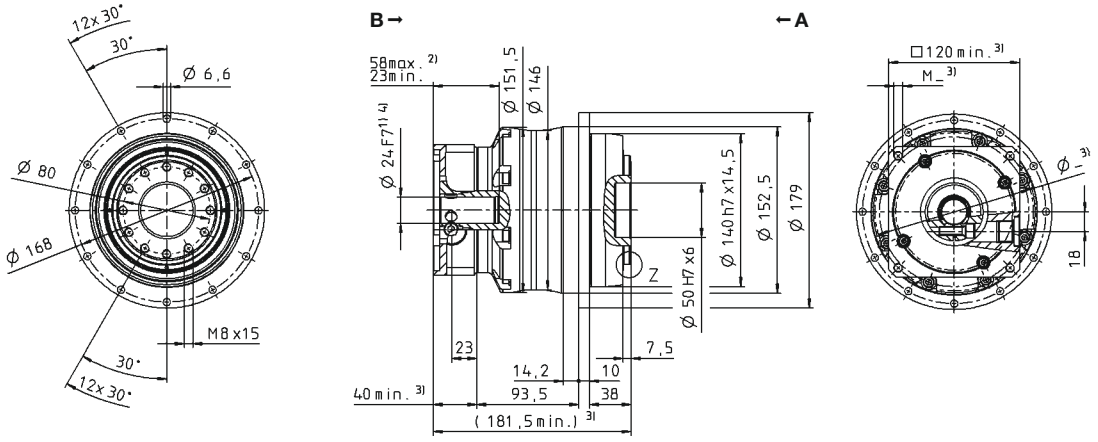

up to 38 [4] (K) clamping hub diameter

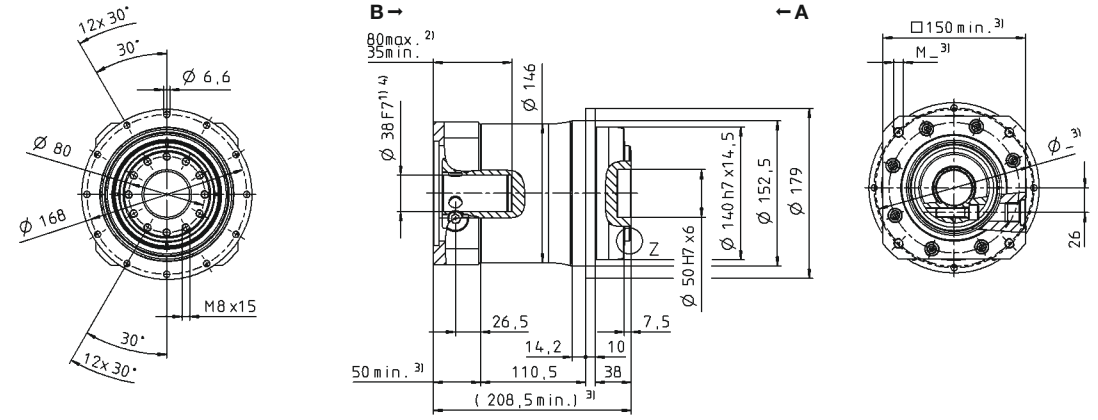

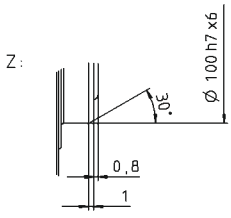

Non-tolerated dimensions are nominal dimensions
[1] Check motor shaft fit
[2] Min./Max. permissible motor shaft length. Longer motor shafts are possible, please contact alpha.
[3] The dimensions depend on the motor
[4] Smaller motor shaft diameter is compensated by a bushing with a minimum thickness of 1 mm
[5] Standard clamping hub diameter

			1-stage				
Ratio	i		**4**	**5**	**7**	**8**	**10**
Max. torque [a) b)]	T_{2a}	*Nm*	2560	2560	2560	2240	2240
		in.lb	22658	22658	22658	19826	19826
Max. acceleration torque [b)] (max. 1000 cycles per hour)	T_{2B}	*Nm*	1920	1920	1920	1680	1680
		in.lb	16994	16994	16994	14869	14869
Nominal torque (at n_{1N})	T_{2N}	*Nm*	946	919	861	861	901
		in.lb	8375	8134	7618	7618	7972
Emergency stop torque [a) b)] (permitted 1000 times during the service life of the gearbox)	T_{2Not}	*Nm*	3075	3075	3075	3075	3075
		in.lb	27216	27216	27216	27216	27216
Permitted average input speed (at T_{2N} and 20 °C ambient temperature) [d)]	n_{1N}	*rpm*	1400	1500	2000	2000	2000
Max. input speed	n_{1Max}	*rpm*	4500	4500	4500	4500	4500
Mean no load running torque [b)] (at n_1 = 3000 rpm and 20 °C gearbox temperature)	T_{012}	*Nm*	16	12	8.8	8.8	6.0
		in.lb	138	109	78	78	53
Max. backlash	j_t	*arcmin*	Standard ≤ 3 / Reduced ≤ 1				
Torsional rigidity [b)]	C_{t21}	*Nm/arcmin*	610	610	550	445	445
		in.lb/arcmin	5399	5399	4868	3939	3939
Tilting rigidity	C_{2K}	*Nm/arcmin*	1452				
		in.lb/arcmin	12851				
Max. axial force [c)]	F_{2AMax}	*N*	10050				
		lb_f	2261				
Max. tilting moment	M_{2KMax}	*Nm*	3280				
		in.lb	29031				
Efficiency at full load	η	%	97				
Service life	L_h	*h*	> 20000				
Weight (incl. standard adapter plate)	*m*	*kg*	30				
		lb_m	66.3				
Operating noise (at reference ratio and reference speed – ratio-specific values available in cymex®)	L_{PA}	*dB(A)*	≤ 68				
Max. permitted housing temperature		*°C*	+90				
		F	194				
Ambient temperature		*°C*	–15 to +40				
		F	5 to 104				
Lubrication			Lubricated for life				
Direction of rotation			In- and output same direction				
Protection class			IP 65				
Metal bellows coupling (recommended product type – validate sizing with cymex®)			BCT-01500AAX-125.000				
Bore diameter of coupling on the application side		*mm*	X = 050.000 - 080.000				
Mass moment of inertia (relates to the drive) **K 38**	J_1	$kgcm^2$	44.5	34.6	25.5	25.5	20.6
		10^{-3} $in.lb.s^2$	39.4	30.6	22.6	22.6	18.2
M 48	J_1	$kgcm^2$	58.8	41.9	32.9	32.9	28.0
		10^{-3} $in.lb.s^2$	52.0	37.1	29.1	29.1	24.8
N 55	J_1	$kgcm^2$	61.5	51.5	42.3	42.3	37.3
		10^{-3} $in.lb.s^2$	54.4	45.6	37.4	37.4	33.0

Clamping hub diameter [mm]

Optimized mass inertia version available on request

Please use our sizing software cymex® for a detailed sizing – **www.wittenstein-cymex.com**

a) At max. 10 % M_{2KMax}
b) Valid for standard clamping hub diameter
c) Refers to center of the output shaft or flange
d) Please reduce input speed at higher ambient temperatures

View A | View B

1-stage

Motor shaft diameter [mm]

up to 38 [4] (K) clamping hub diameter

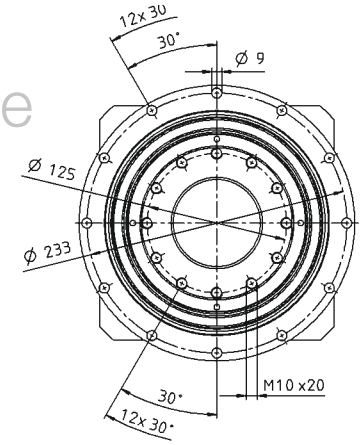

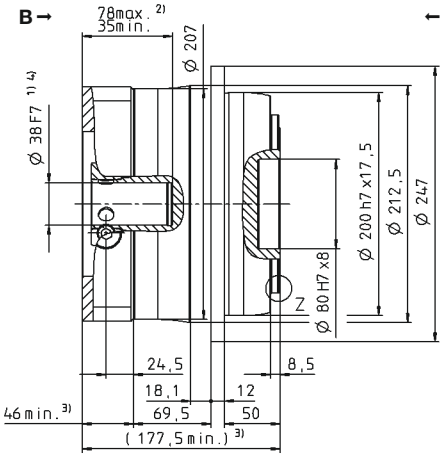

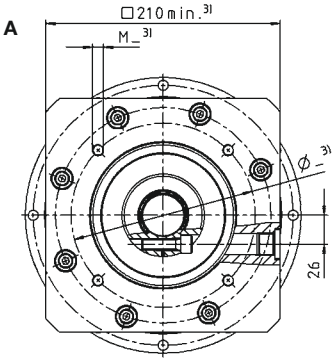

up to 48 [4] (M) [5] clamping hub diameter

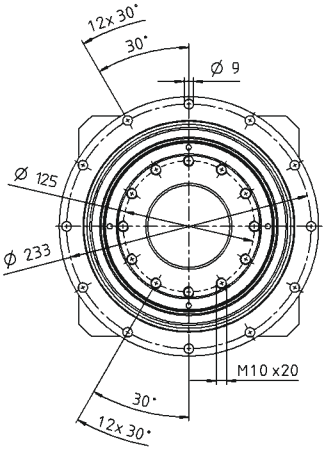

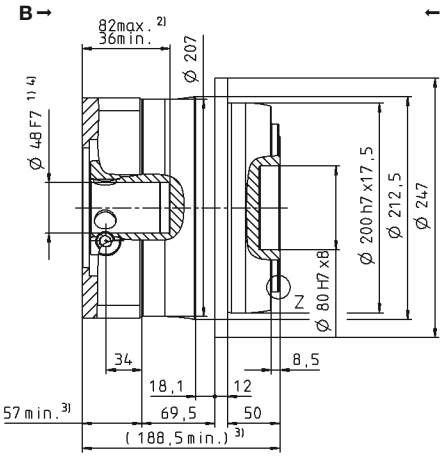

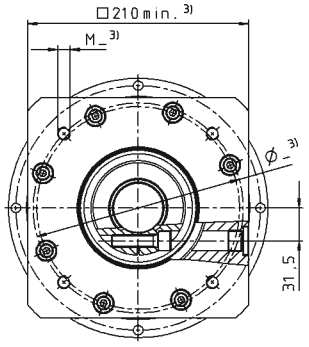

up to 55 [4] (N) clamping hub diameter

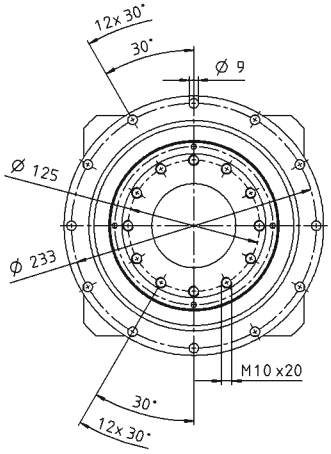

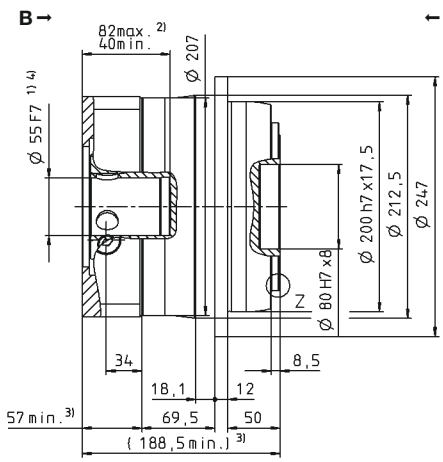

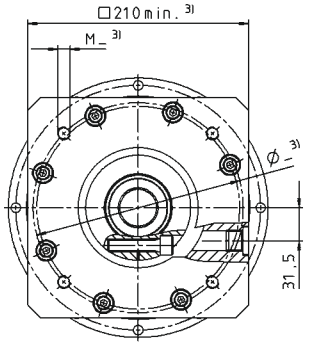

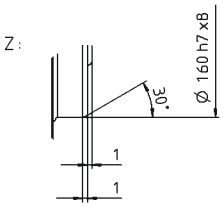

Non-tolerated dimensions are nominal dimensions
[1] Check motor shaft fit
[2] Min./Max. permissible motor shaft length. Longer motor shafts are possible, please contact alpha.
[3] The dimensions depend on the motor
[4] Smaller motor shaft diameter is compensated by a bushing with a minimum thickness of 1 mm
[5] Standard clamping hub diameter

TP+ 110 MF 2-stage

				2-stage														
Ratio		*i*		**16**	**20**	**21**	**25**	**28**	**31**	**32**	**35**	**40**	**50**	**61**	**64**	**70**	**91**	**100**
Max. torque [a) b)]		T_{2a}	*Nm*	1760	1760	1540	1760	1760	1760	1760	1760	1760	1760	1540	1540	1760	1430	1540
			in.lb	15577	15577	13630	15577	15577	15577	15577	15577	15577	15577	13630	13630	15577	12657	13630
Max. acceleration torque [b)] (max. 1000 cycles per hour)		T_{2B}	*Nm*	1760	1760	1540	1760	1760	1760	1760	1760	1760	1760	1540	1540	1760	1430	1540
			in.lb	15577	15577	13630	15577	15577	15577	15577	15577	15577	15577	13630	13630	15577	12657	13630
Nominal torque (at n_{1N})		T_{2N}	*Nm*	1205	1240	1023	1278	1257	1065	1221	1408	1315	1408	1232	1232	1408	1144	1232
			in.lb	10669	10976	9051	11312	11121	9422	10807	12462	11636	12462	10904	10904	12462	10125	10904
Emergency stop torque [a) b)] (permitted 1000 times during the service life of the gearbox)		T_{2Not}	*Nm*	3075	3075	3075	3075	3075	3075	3075	3075	3075	3075	3075	3075	3075	3075	3075
			in.lb	27216	27216	27216	27216	27216	27216	27216	27216	27216	27216	27216	27216	27216	27216	27216
Permitted average input speed (at T_{2N} and 20 °C ambient temperature) [d)]		n_{1N}	*rpm*	2500	2500	2500	2500	2500	2500	2500	2500	2500	2900	3200	2900	3200	3400	3400
Max. input speed		n_{1Max}	*rpm*	5625	5625	5625	5625	5625	5625	5625	5625	5625	5625	5625	5625	5625	5625	5625
Mean no load running torque [b)] (at n_1 = 3000 rpm and 20 °C gearbox temperature)		T_{012}	*Nm*	7.0	5.8	5.2	5.2	4.5	4.4	4.5	3.1	3.0	2.5	2.1	2.5	2.0	1.8	1.8
			in.lb	52	52	46	46	40	39	40	28	27	22	18	22	18	16	16
Max. backlash		j_t	*arcmin*	Standard ≤ 3 / Reduced ≤ 1														
Torsional rigidity [b)]		C_{t21}	*Nm/arcmin*	585	580	465	570	560	440	560	560	520	525	415	525	480	360	395
			in.lb/arcmin	5178	5133	4116	5045	4956	3894	4956	4956	4602	4647	3673	4647	4248	3186	3496
Tilting rigidity		C_{2K}	*Nm/arcmin*	1452														
			in.lb/arcmin	12851														
Max. axial force [c)]		F_{2AMax}	*N*	10050														
			lb_f	2261														
Max. tilting moment		M_{2KMax}	*Nm*	3280														
			in.lb	29031														
Efficiency at full load		η	%	94														
Service life		L_h	*h*	> 20000														
Weight (incl. standard adapter plate)		*m*	*kg*	34														
			lb_m	75.1														
Operating noise (at reference ratio and reference speed – ratio-specific values available in cymex®)		L_{PA}	*dB(A)*	≤ 61														
Max. permitted housing temperature			*°C*	+90														
			F	194														
Ambient temperature			*°C*	–15 to +40														
			F	5 to 104														
Lubrication				Lubricated for life														
Direction of rotation				In- and output same direction														
Protection class				IP 65														
Metal bellows coupling (recommended product type – validate sizing with cymex®)				BCT-01500AAX-125.000														
Bore diameter of coupling on the application side			*mm*	X = 050.000 - 080.000														
Mass moment of inertia (relates to the drive) Clamping hub diameter [mm] Optimized mass inertia version available on request	G 24	J_1	$kgcm^2$	8.51	8.21	8.98	7.82	6.57	8.09	6.57	6.37	5.63	5.54	5.63	5.78	5.44	5.51	5.40
			10^{-3} $in.lb.s^2$	7.53	7.27	7.95	6.92	5.81	7.16	5.81	5.64	4.98	4.90	4.98	5.12	4.81	4.88	4.78
	I 32	J_1	$kgcm^2$	11.7	11.4	12.1	11.0	9.73	11.3	9.73	9.54	8.80	8.70	8.80	8.95	8.61	8.67	8.56
			10^{-3} $in.lb.s^2$	10.4	10.1	10.7	9.74	8.61	10.0	8.61	8.44	7.79	7.70	7.79	7.92	7.62	7.67	7.58
	K 38	J_1	$kgcm^2$	12.7	12.5	13.2	12.1	10.8	12.3	10.8	10.6	9.87	9.77	9.87	10.0	9.68	9.74	9.63
			10^{-3} $in.lb.s^2$	11.2	11.1	11.7	10.7	9.56	10.9	9.56	9.39	8.73	8.65	8.73	8.87	8.57	8.62	8.52
	M 48	J_1	$kgcm^2$	27.4	27.1	27.8	26.7	25.4	26.9	25.4	25.3	24.5	24.4	24.5	24.9	24.3	24.4	24.3
			10^{-3} $in.lb.s^2$	24.3	24.0	24.6	23.6	22.5	23.8	22.5	22.4	21.7	21.6	21.7	22.0	21.5	21.6	21.5

Please use our sizing software cymex® for a detailed sizing – **www.wittenstein-cymex.com**

[a)] At max. 10 % M_{2KMax}
[b)] Valid for standard clamping hub diameter
[c)] Refers to center of the output shaft or flange
[d)] Please reduce input speed at higher ambient temperatures

View A | View B

2-stage

Motor shaft diameter [mm]

up to 24 [4] (G) clamping hub diameter

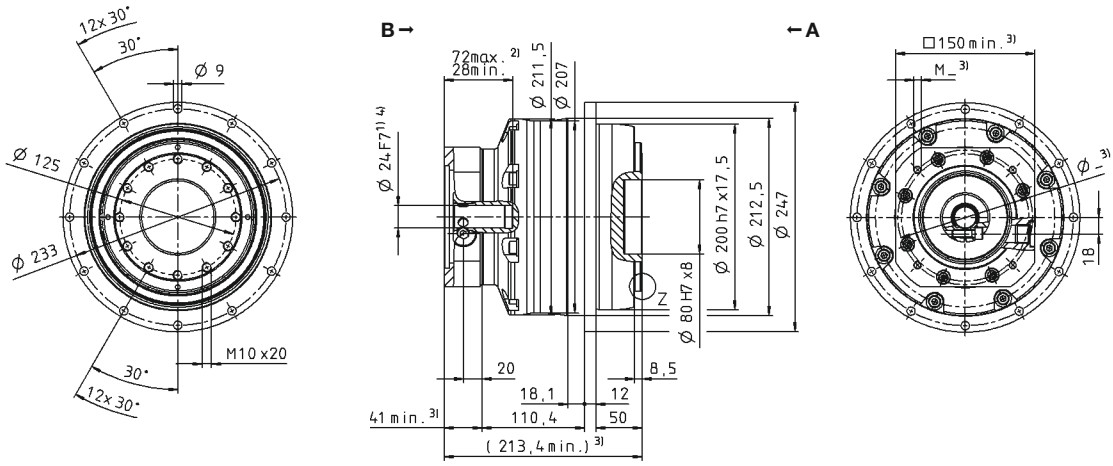

up to 32/38 [4] (I/K [5]) clamping hub diameter

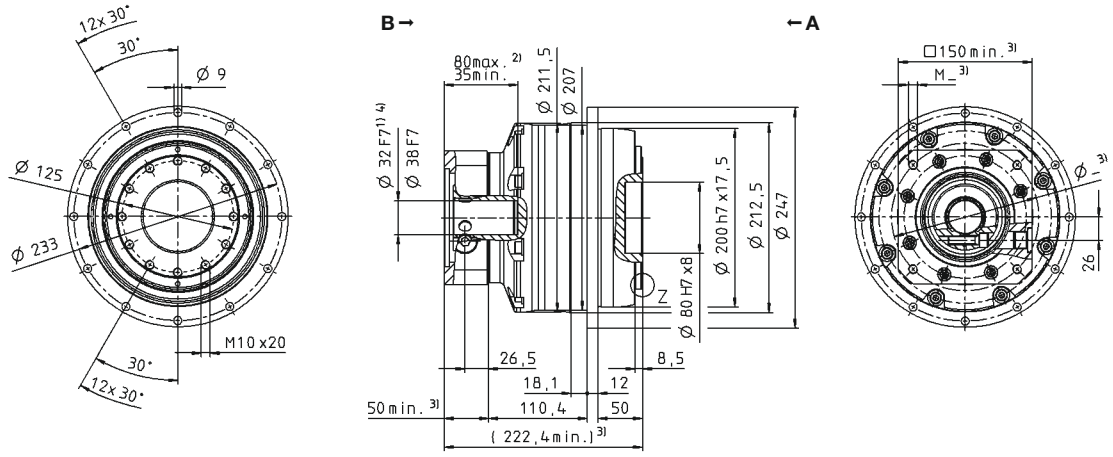

up to 48 [4] (M) clamping hub diameter

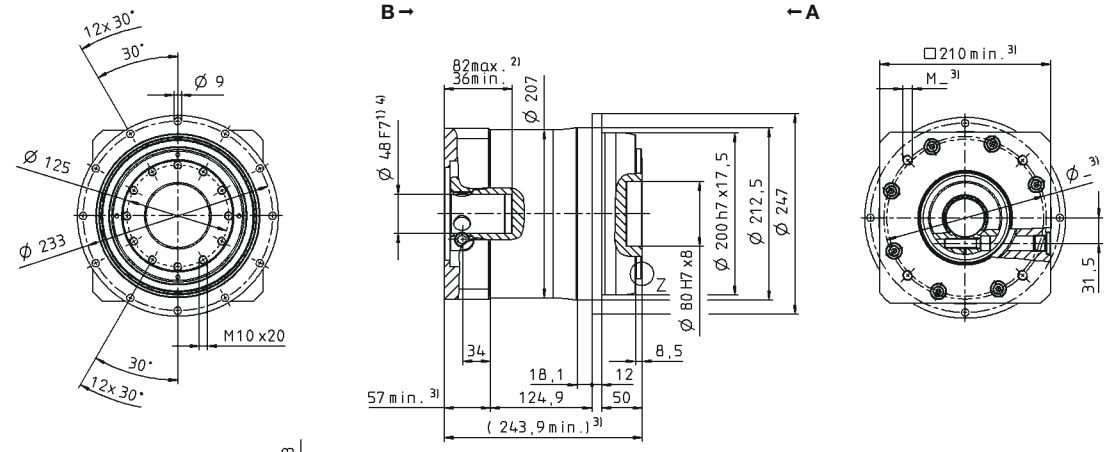

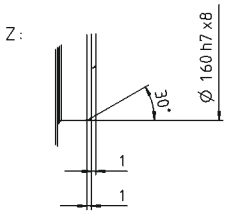

Non-tolerated dimensions are nominal dimensions
[1] Check motor shaft fit
[2] Min./Max. permissible motor shaft length. Longer motor shafts are possible, please contact alpha.
[3] The dimensions depend on the motor
[4] Smaller motor shaft diameter is compensated by a bushing with a minimum thickness of 1 mm
[5] Standard clamping hub diameter

TP+ 300 MF 1-stage

			1-stage			
Ratio	i		**5**	**7**	**8**	**10**
Max. torque [a) b)]	T_{2a}	*Nm*	5600	5250	2800	2800
		in.lb	49564	46467	24782	24782
Max. acceleration torque [b)] (max. 1000 cycles per hour)	T_{2B}	*Nm*	4200	3960	2280	2280
		in.lb	37173	35049	20180	20180
Nominal torque (at n_{1N})	T_{2N}	*Nm*	1996	1835	1815	1794
		in.lb	17666	16242	16063	15878
Emergency stop torque [a) b)] (permitted 1000 times during the service life of the gearbox)	T_{2Not}	*Nm*	9900	9900	8557	8750
		in.lb	87623	87623	75733	77445
Permitted average input speed (at T_{2N} and 20 °C ambient temperature) [d)]	n_{1N}	*rpm*	1000	1400	1400	1700
Max. input speed	n_{1Max}	*rpm*	3000	3000	3000	3000
Mean no load running torque [b)] (at n_1 = 2000 rpm and 20 °C gearbox temperature)	T_{012}	*Nm*	20	14	14	8.8
		in.lb	177	120	120	78
Max. backlash	j_t	*arcmin*	Standard ≤ 3 / Reduced ≤ 1			
Torsional rigidity [b)]	C_{t21}	*Nm/arcmin*	1000	900	700	700
		in.lb/arcmin	8851	7966	6196	6196
Tilting rigidity	C_{2K}	*Nm/arcmin*	5560			
		in.lb/arcmin	49210			
Max. axial force [c)]	F_{2AMax}	*N*	33000			
		lb_f	7425			
Max. tilting moment	M_{2KMax}	*Nm*	3900			
		in.lb	34518			
Efficiency at full load	η	%	95			
Service life	L_h	*h*	> 20000			
Weight (incl. standard adapter plate)	*m*	*kg*	60			
		lb_m	132.6			
Operating noise (at reference ratio and reference speed – ratio-specific values available in cymex®)	L_{PA}	*dB(A)*	≤ 64			
Max. permitted housing temperature		*°C*	+90			
		F	194			
Ambient temperature		*°C*	–15 to +40			
		F	5 to 104			
Lubrication			Lubricated for life			
Direction of rotation			In- and output same direction			
Protection class			IP 65			
Metal bellows coupling (recommended product type – validate sizing with cymex®)			–			
Bore diameter of coupling on the application side		*mm*	–			
Mass moment of inertia (relates to the drive) Clamping hub diameter [mm] N 55 Optimized mass inertia version available on request	J_1	$kgcm^2$	82.6	61.2	61.2	49.5
		10^{-3} $in.lb.s^2$	73.1	54.2	54.2	43.8

Please use our sizing software cymex® for a detailed sizing – **www.wittenstein-cymex.com**

[a)] At max. 10 % M_{2KMax}
[b)] Valid for standard clamping hub diameter
[c)] Refers to center of the output shaft or flange
[d)] Please reduce input speed at higher ambient temperatures

View A

View B

Motor shaft diameter [mm]

1-stage

up to 55 [4] (N) [5]
clamping hub diameter

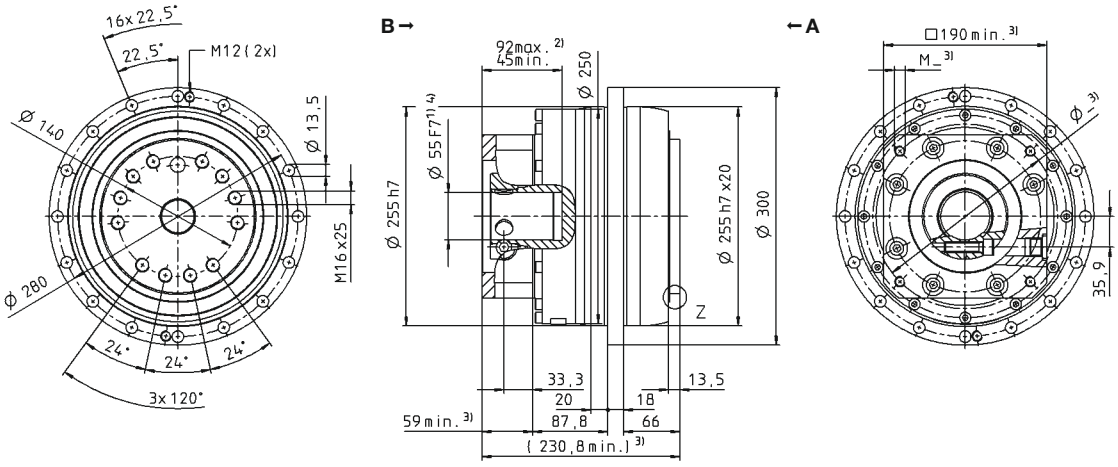

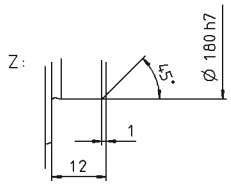

Non-tolerated dimensions are nominal dimensions
1) Check motor shaft fit
2) Min./Max. permissible motor shaft length. Longer motor shafts are possible, please contact alpha.
3) The dimensions depend on the motor
4) Smaller motor shaft diameter is compensated by a bushing with a minimum thickness of 1 mm
5) Standard clamping hub diameter

TP+ 300 MF 2-stage

			2-stage											
Ratio	i		**20**	**21**	**25**	**31**	**32**	**35**	**50**	**61**	**64**	**70**	**91**	**100**
Max. torque [a) b)]	T_{2a}	*Nm*	3850	3740	3949	3850	3630	3949	3600	3080	2800	3630	2800	2800
		in.lb	34076	33102	34947	34076	32128	34947	31863	27260	24782	32128	24782	24782
Max. acceleration torque [b)] (max. 1000 cycles per hour)	T_{2B}	*Nm*	3850	3740	3949	3850	3630	3949	3600	3080	2800	3630	2800	2800
		in.lb	34076	33102	34952	34076	32128	34952	31863	27260	24782	32128	24782	24782
Nominal torque (at n_{1N})	T_{2N}	*Nm*	1354	1456	1676	2114	2353	1710	1722	2070	2240	2339	2240	2240
		in.lb	11981	12888	14834	18709	20823	15131	15238	18320	19826	20698	19826	19826
Emergency stop torque [a) b)] (permitted 1000 times during the service life of the gearbox)	T_{2Not}	*Nm*	9900	9870	9900	9156	9900	9900	9900	9008	9900	9900	8750	8750
		in.lb	87623	87357	87623	81035	87623	87623	87623	79728	87623	87623	77445	77445
Permitted average input speed (at T_{2N} and 20 °C ambient temperature) [d)]	n_{1N}	*rpm*	2000	2000	2000	2000	2000	2000	2300	2400	2300	2400	2500	2500
Max. input speed	n_{1Max}	*rpm*	4375	4375	4375	4375	4375	4375	4375	4375	4375	4375	4375	4375
Mean no load running torque [b)] (at n_1 = 2000 rpm and 20 °C gearbox temperature)	T_{012}	*Nm*	6.7	5.5	5.5	4.8	5.5	4.0	3.8	2.8	3.8	3.0	2.8	2.4
		in.lb	59	49	48	43	48	35	34	25	34	26	25	21
Max. backlash	j_t	*arcmin*	Standard ≤ 3 / Reduced ≤ 2											
Torsional rigidity [b)]	C_{t21}	*Nm/arcmin*	850	800	950	750	950	900	800	700	800	800	600	650
		in.lb/arcmin	7523	7081	8408	6638	8408	7966	7081	6196	7081	7081	5310	5753
Tilting rigidity	C_{2K}	*Nm/arcmin*	5560											
		in.lb/arcmin	49210											
Max. axial force [c)]	F_{2AMax}	*N*	33000											
		lb_f	7425											
Max. tilting moment	M_{2KMax}	*Nm*	5900											
		in.lb	52220											
Efficiency at full load	η	*%*	94											
Service life	L_h	*h*	> 20000											
Weight (incl. standard adapter plate)	m	*kg*	58.5											
		lb_m	129.3											
Operating noise (at reference ratio and reference speed – ratio-specific values available in cymex®)	L_{PA}	*dB(A)*	≤ 61											
Max. permitted housing temperature		*°C*	+90											
		F	194											
Ambient temperature		*°C*	–15 to +40											
		F	5 to 104											
Lubrication			Lubricated for life											
Direction of rotation			In- and output same direction											
Protection class			IP 65											
Metal bellows coupling (recommended product type – validate sizing with cymex®)			–											
Bore diameter of coupling on the application side		*mm*	–											
Mass moment of inertia (relates to the drive) Clamping hub diameter [mm] M 48 Optimized mass inertia version available on request	J_1	*$kgcm^2$*	27.5	27.0	25.9	25.6	22.4	22.4	21.5	21.4	25.8	21.3	21.2	21.2
		10^{-3} in.lb.s²	24.3	23.9	22.9	22.7	19.8	19.8	19.0	18.9	22.8	18.9	18.8	18.8

Please use our sizing software cymex® for a detailed sizing – **www.wittenstein-cymex.com**

a) At max. 10 % M_{2KMax}
b) Valid for standard clamping hub diameter
c) Refers to center of the output shaft or flange
d) Please reduce input speed at higher ambient temperatures

View A

View B

Motor shaft diameter [mm]

2-stage

up to 48 [4] (M) [5] clamping hub diameter

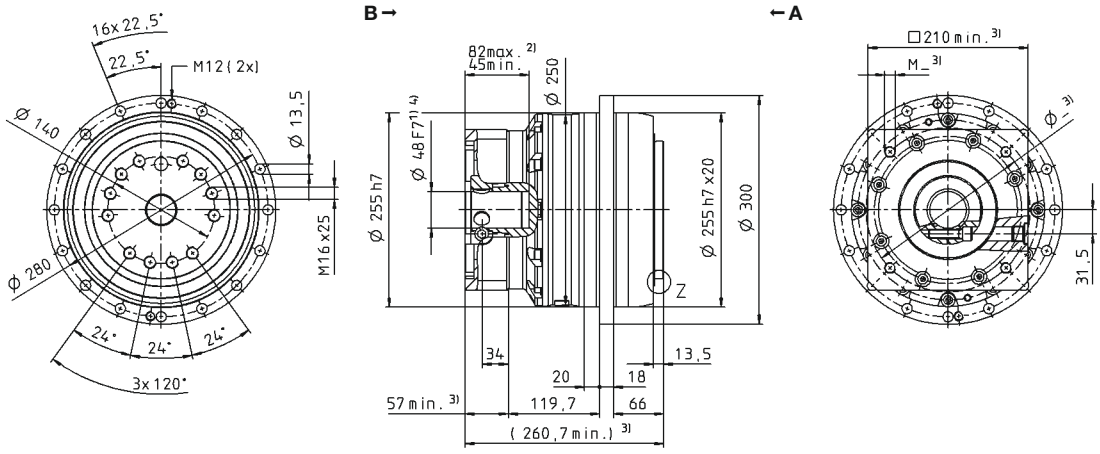

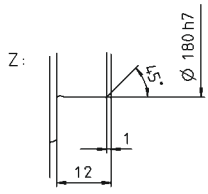

Non-tolerated dimensions are nominal dimensions

1) Check motor shaft fit
2) Min./Max. permissible motor shaft length. Longer motor shafts are possible, please contact alpha.
3) The dimensions depend on the motor
4) Smaller motor shaft diameter is compensated by a bushing with a minimum thickness of 1 mm
5) Standard clamping hub diameter

TP+ 500 MF 1-stage

			1-stage			
Ratio	i		**5**	**7**	**8**	**10**
Max. torque [a) b)]	T_{2a}	*Nm*	9600	6790	4000	4000
		in.lb	84968	60097	35403	35403
Max. acceleration torque [b)] (max. 1000 cycles per hour)	T_{2B}	*Nm*	7200	6000	4000	4000
		in.lb	63726	53105	35403	35403
Nominal torque (at n_{1N})	T_{2N}	*Nm*	3131	2857	2830	2840
		in.lb	27711	25286	25049	25135
Emergency stop torque [a) b)] (permitted 1000 times during the service life of the gearbox)	T_{2Not}	*Nm*	15000	15000	15000	15000
		in.lb	132762	132762	132762	132762
Permitted average input speed (at T_{2N} and 20 °C ambient temperature) [d)]	n_{1N}	*rpm*	900	1300	1300	1500
Max. input speed	n_{1Max}	*rpm*	3000	3000	3000	3000
Mean no load running torque [b)] (at n_1 = 2000 rpm and 20 °C gearbox temperature)	T_{012}	*Nm*	27	19	19	12
		in.lb	242	170	170	110
Max. backlash	j_t	*arcmin*	Standard ≤ 3 / Reduced ≤ 1			
Torsional rigidity [b)]	C_{t21}	*Nm/arcmin*	1450	1300	1100	1100
		in.lb/arcmin	12834	11506	9736	9736
Tilting rigidity	C_{2K}	*Nm/arcmin*	9480			
		in.lb/arcmin	83906			
Max. axial force [c)]	F_{2AMax}	*N*	50000			
		lb_f	11250			
Max. tilting moment	M_{2KMax}	*Nm*	5500			
		in.lb	48679			
Efficiency at full load	η	%	95			
Service life	L_h	*h*	> 20000			
Weight (incl. standard adapter plate)	*m*	*kg*	82			
		lb_m	181.2			
Operating noise (at reference ratio and reference speed – ratio-specific values available in cymex®)	L_{PA}	*dB(A)*	≤ 64			
Max. permitted housing temperature		*°C*	+90			
		F	194			
Ambient temperature		*°C*	–15 to +40			
		F	5 to 104			
Lubrication			Lubricated for life			
Direction of rotation			In- and output same direction			
Protection class			IP 65			
Metal bellows coupling (recommended product type – validate sizing with cymex®)			–			
Bore diameter of coupling on the application side		*mm*	–			
Mass moment of inertia (relates to the drive) Clamping hub diameter [mm] O 60 Optimized mass inertia version available on request	J_1	$kgcm^2$	182	142	142	120
		10^{-3} $in.lb.s^2$	161	126	126	106

Please use our sizing software cymex® for a detailed sizing – **www.wittenstein-cymex.com**

[a)] At max. 10 % M_{2KMax}
[b)] Valid for standard clamping hub diameter
[c)] Refers to center of the output shaft or flange
[d)] Please reduce input speed at higher ambient temperatures

View A View B

Motor shaft diameter [mm]

1-stage

up to 60 [4] (O) [5]
clamping hub diameter

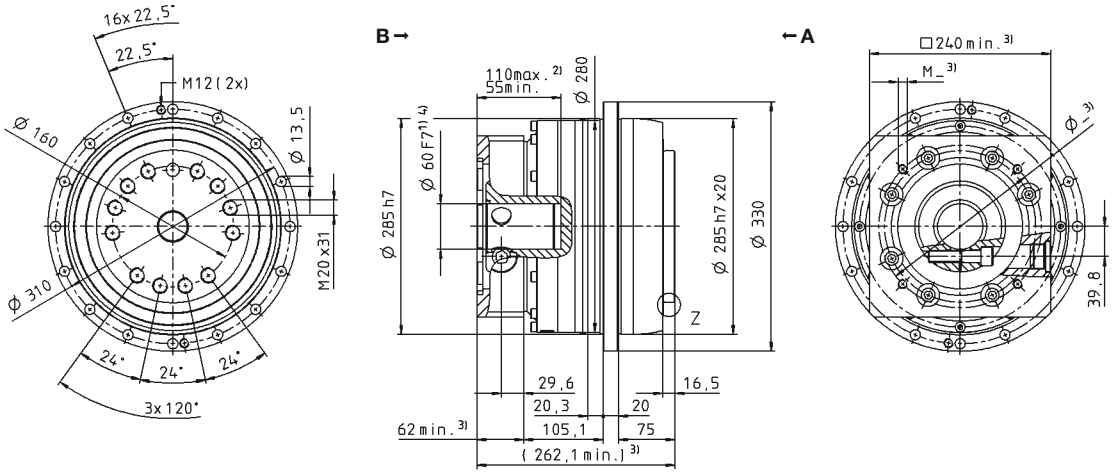

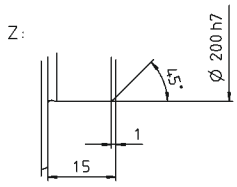

Non-tolerated dimensions are nominal dimensions
[1] Check motor shaft fit
[2] Min./Max. permissible motor shaft length. Longer motor shafts are possible, please contact alpha.
[3] The dimensions depend on the motor
[4] Smaller motor shaft diameter is compensated by a bushing with a minimum thickness of 1 mm
[5] Standard clamping hub diameter

TP+ 500 MF 2-stage

			2-stage											
Ratio	i		**20**	**21**	**25**	**31**	**32**	**35**	**50**	**61**	**64**	**70**	**91**	**100**
Max. torque [a) b)]	T_{2a}	*Nm*	5446	5718	6808	6354	5500	6808	4975	5280	4800	5500	4800	4800
		in.lb	48202	50612	60252	56239	48679	60252	44033	46732	42484	48679	42484	42484
Max. acceleration torque [b)] (max. 1000 cycles per hour)	T_{2B}	*Nm*	5446	5718	6808	6324	5500	6808	4975	5280	4800	5500	4800	4800
		in.lb	48202	50612	60252	56239	48679	60252	44033	46732	42484	48679	42484	42484
Nominal torque (at n_{1N})	T_{2N}	*Nm*	3026	3270	3729	4086	4376	3828	3697	4224	3840	4400	3840	3840
		in.lb	26785	28944	33002	36160	38730	33878	32720	37386	33987	38944	33987	33987
Emergency stop torque [a) b)] (permitted 1000 times during the service life of the gearbox)	T_{2Not}	*Nm*	15000	13928	15000	10854	15000	15000	15000	10678	15000	15000	15000	15000
		in.lb	132762	123274	132762	96063	132762	132762	132762	94513	132762	132762	132762	132762
Permitted average input speed (at T_{2N} and 20 °C ambient temperature) [d)]	n_{1N}	*rpm*	1500	1500	1500	1500	1500	1500	2000	2100	2000	2100	2200	2200
Max. input speed	n_{1Max}	*rpm*	4375	4375	4375	4375	4375	4375	4375	4375	4375	4375	4375	4375
Mean no load running torque [b)] (at n_1 = 2000 rpm and 20 °C gearbox temperature)	T_{012}	*Nm*	10	9.6	9.2	7.0	9.2	7.0	5.8	3.4	5.8	4.5	3.5	3.6
		in.lb	92	85	81	62	81	62	51	30	51	40	31	32
Max. backlash	j_t	*arcmin*	Standard ≤ 3 / Reduced ≤ 2											
Torsional rigidity [b)]	C_{t21}	*Nm/arcmin*	1400	1200	1450	1200	1450	1400	1300	1100	1300	1250	950	1050
		in.lb/arcmin	12391	10621	12834	10621	12834	12391	11506	9736	11506	11064	8408	9293
Tilting rigidity	C_{2K}	*Nm/arcmin*	9480											
		in.lb/arcmin	83906											
Max. axial force [c)]	F_{2AMax}	*N*	50000											
		lb_f	11250											
Max. tilting moment	M_{2KMax}	*Nm*	8800											
		in.lb	77887											
Efficiency at full load	η	%	94											
Service life	L_h	*h*	> 20000											
Weight (incl. standard adapter plate)	m	*kg*	77.5											
		lb_m	171.3											
Operating noise (at reference ratio and reference speed – ratio-specific values available in cymex®)	L_{PA}	*dB(A)*	≤ 60											
Max. permitted housing temperature		*°C*	+90											
		F	194											
Ambient temperature		*°C*	–15 to +40											
		F	5 to 104											
Lubrication			Lubricated for life											
Direction of rotation			In- and output same direction											
Protection class			IP 65											
Metal bellows coupling (recommended product type – validate sizing with cymex®)			–											
Bore diameter of coupling on the application side		*mm*	–											
Mass moment of inertia (relates to the drive) Clamping hub diameter [mm] M 48 Optimized mass inertia version available on request	J_1	*kgcm²*	24.8	35.9	40.2	33.7	35.4	27.4	27.4	25.4	25.8	31.0	25.0	25.2
		10^{-3} in.lb.s²	21.9	31.8	35.6	29.8	31.3	24.2	24.2	22.5	22.8	27.4	22.1	22.3

Please use our sizing software cymex® for a detailed sizing – **www.wittenstein-cymex.com**

[a)] At max. 10 % M_{2KMax}
[b)] Valid for standard clamping hub diameter
[c)] Refers to center of the output shaft or flange
[d)] Please reduce input speed at higher ambient temperatures

View A

View B

Motor shaft diameter [mm]

2-stage

up to 48 [4] (M) [5] clamping hub diameter

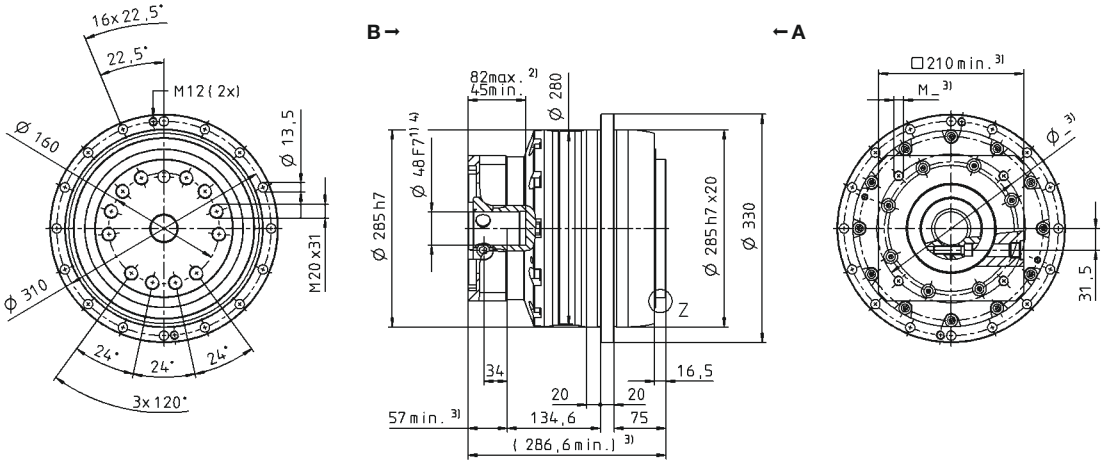

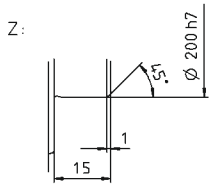

Non-tolerated dimensions are nominal dimensions

1) Check motor shaft fit
2) Min./Max. permissible motor shaft length. Longer motor shafts are possible, please contact alpha.
3) The dimensions depend on the motor
4) Smaller motor shaft diameter is compensated by a bushing with a minimum thickness of 1 mm
5) Standard clamping hub diameter

TP+ 010 MA 2- / 3-stage

			2-stage				3-stage			
Ratio	i		**22**	**27.5**	**38.5**	**55**	**88**	**110**	**154**	**220**
Max. torque [a) b)]	T_{2a}	*Nm*	315	315	315	315	315	315	315	315
		in.lb	2788	2788	2788	2788	2788	2788	2788	2788
Max. acceleration torque [b)] (max. 1000 cycles per hour)	T_{2B}	*Nm*	230	230	230	230	230	230	230	230
		in.lb	2036	2036	2036	2036	2036	2036	2036	2036
Nominal torque (at n_{1N})	T_{2N}	*Nm*	140	137	139	147	184	184	181	184
		in.lb	1242	1213	1230	1303	1629	1629	1599	1629
Emergency stop torque [a) b)] (permitted 1000 times during the service life of the gearbox)	T_{2Not}	*Nm*	525	525	525	525	525	525	525	525
		in.lb	4647	4647	4647	4647	4647	4647	4647	4647
Permitted average input speed (at T_{2N} and 20 °C ambient temperature) [d)]	n_{1N}	*rpm*	4000	4000	4000	4000	4500	4500	4500	4500
Max. input speed	n_{1Max}	*rpm*	7500	7500	7500	7500	7500	7500	7500	7500
Mean no load running torque [b)] (at n_1 = 3000 rpm and 20 °C gearbox temperature)	T_{012}	*Nm*	0.52	0.47	0.38	0.38	0.28	0.26	0.22	0.18
		in.lb	4.6	4.2	3.4	3.4	2.5	2.3	1.9	1.6
Max. backlash	j_t	*arcmin*	≤ 1							
Torsional rigidity [b)]	C_{t21}	*Nm/arcmin*	43	43	43	42	42	42	42	42
		in.lb/arcmin	381	381	381	372	372	372	372	372
Tilting rigidity	C_{2K}	*Nm/arcmin*	225							
		in.lb/arcmin	1991							
Max. axial force [c)]	F_{2AMax}	*N*	2795							
		lb_f	629							
Max. tilting moment	M_{2KMax}	*Nm*	400							
		in.lb	3540							
Efficiency at full load	η	%	94							
Service life	L_h	*h*	> 20000							
Weight (incl. standard adapter plate)	m	*kg*	3.2				3.6			
		lb_m	7.1				8.0			
Operating noise (at reference ratio and reference speed – ratio-specific values available in cymex®)	L_{PA}	*dB(A)*	≤ 56							
Max. permitted housing temperature		*°C*	+90							
		F	194							
Ambient temperature		*°C*	–15 to +40							
		F	5 to 104							
Lubrication			Lubricated for life							
Direction of rotation			In- and output same direction							
Protection class			IP 65							
Metal bellows coupling (recommended product type – validate sizing with cymex®)			BCT-00150AAX-050.00							
Bore diameter of coupling on the application side		*mm*	X = 016.000 - 038.000							
Mass moment of inertia (relates to the drive) — C 14	J_1	$kgcm^2$	0.21	0.18	0.16	0.14	0.16	0.15	0.14	0.13
		10^{-3} $in.lb.s^2$	0.19	0.16	0.14	0.12	0.14	0.13	0.12	0.12
Clamping hub diameter [mm] — E 19	J_1	$kgcm^2$	0.52	0.50	0.47	0.46	-	-	-	-
Optimized mass inertia version available on request		10^{-3} $in.lb.s^2$	0.46	0.44	0.42	0.41	-	-	-	-

Please use our sizing software cymex® for a detailed sizing – **www.wittenstein-cymex.com**

[a)] At max. 10 % M_{2KMax}
[b)] Valid for standard clamping hub diameter
[c)] Refers to center of the output shaft or flange
[d)] Please reduce input speed at higher ambient temperatures

Motor shaft diameter [mm]

2-stage

up to 14 [4] (C) [5] clamping hub diameter

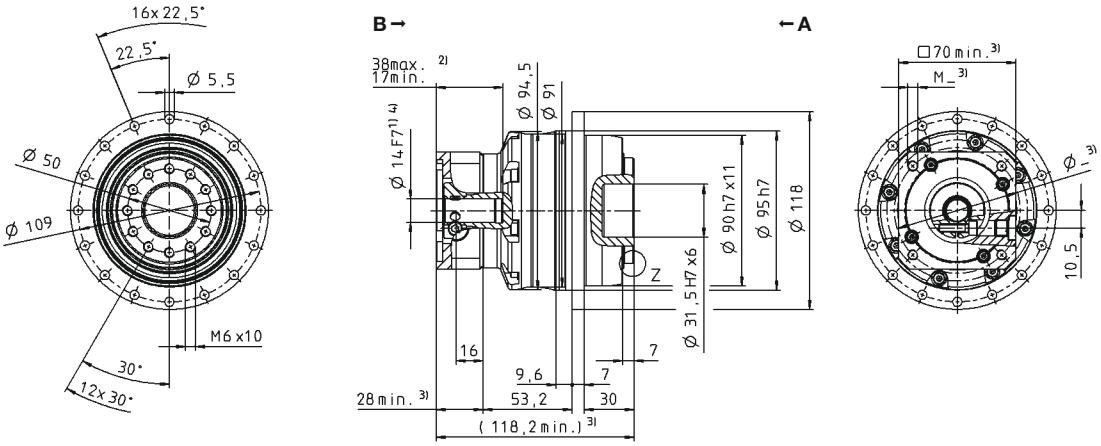

up to 19 [4] (E) clamping hub diameter

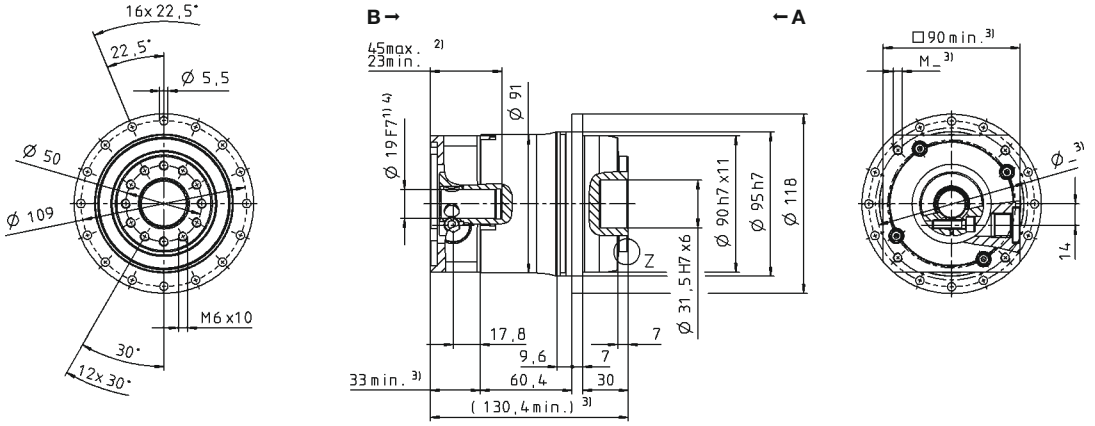

3-stage

up to 14 [4] (C) [5] clamping hub diameter

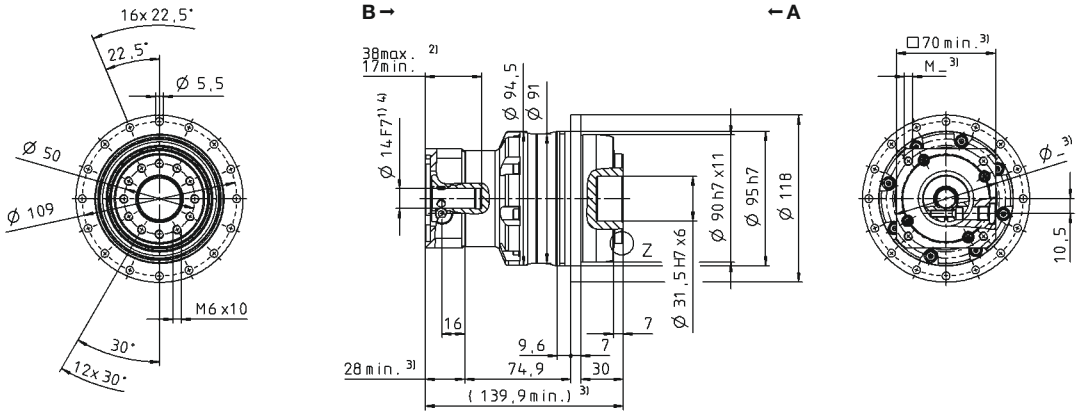

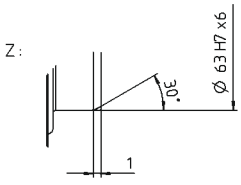

Non-tolerated dimensions are nominal dimensions
1) Check motor shaft fit
2) Min./Max. permissible motor shaft length. Longer motor shafts are possible, please contact alpha.
3) The dimensions depend on the motor
4) Smaller motor shaft diameter is compensated by a bushing with a minimum thickness of 1 mm
5) Standard clamping hub diameter

TP+ 025 MA 2-/3-stage

			2-stage				3-stage				
Ratio	*i*		**22**	**27.5**	**38.5**	**55**	**66**	**88**	**110**	**154**	**220**
Max. torque [a) b)]	T_{2a}	*Nm*	583	583	583	583	525	525	525	525	525
		in.lb	5160	5160	5160	5160	4645	4645	4645	4645	4645
Max. acceleration torque [b)] (max. 1000 cycles per hour)	T_{2B}	*Nm*	530	530	530	530	480	480	480	480	480
		in.lb	4691	4691	4691	4691	4248	4248	4248	4248	4248
Nominal torque (at n_{1N})	T_{2N}	*Nm*	312	314	371	413	260	276	296	330	364
		in.lb	2762	2775	3286	3652	2304	2447	2617	2920	3222
Emergency stop torque [a) b)] (permitted 1000 times during the service life of the gearbox)	T_{2Not}	*Nm*	1200	1200	1200	1200	1200	1200	1200	1200	1200
		in.lb	10621	10621	10621	10621	10621	10621	10621	10621	10621
Permitted average input speed (at T_{2N} and 20 °C ambient temperature) [d)]	n_{1N}	*rpm*	3500	3500	3500	3500	4000	4000	4000	4000	4000
Max. input speed	n_{1Max}	*rpm*	7500	7500	7500	7500	7500	7500	7500	7500	7500
Mean no load running torque [b)] (at n_1 = 3000 rpm and 20 °C gearbox temperature)	T_{012}	*Nm*	1.0	0.87	0.78	0.70	0.62	0.52	0.44	0.35	0.27
		in.lb	9.2	7.7	6.9	6.2	5.5	4.6	3.9	3.1	2.4
Max. backlash	j_t	*arcmin*	≤ 1								
Torsional rigidity [b)]	C_{t21}	*Nm/arcmin*	105	105	105	100	95	95	95	95	95
		in.lb/arcmin	929	929	929	885	841	841	841	841	841
Tilting rigidity	C_{2K}	*Nm/arcmin*	550								
		in.lb/arcmin	4868								
Max. axial force [c)]	F_{2AMax}	*N*	4800								
		lb_f	1080								
Max. tilting moment	M_{2KMax}	*Nm*	550								
		in.lb	4868								
Efficiency at full load	η	%	94								
Service life	L_h	*h*	> 20000								
Weight (incl. standard adapter plate)	*m*	*kg*	5.6				6.1				
		lb_m	12.4				13.5				
Operating noise (at reference ratio and reference speed – ratio-specific values available in cymex®)	L_{PA}	*dB(A)*	≤ 58				≤ 56				
Max. permitted housing temperature		°C	+90								
		F	194								
Ambient temperature		°C	–15 to +40								
		F	5 to 104								
Lubrication			Lubricated for life								
Direction of rotation			In- and output same direction								
Protection class			IP 65								
Metal bellows coupling (recommended product type – validate sizing with cymex®)			BCT-00300AAX-063.00								
Bore diameter of coupling on the application side		*mm*	X = 030.000 - 056.000								
Mass moment of inertia (relates to the drive) — E 19	J_1	$kgcm^2$	0.87	0.7	0.6	0.55	0.63	0.56	0.53	0.51	0.50
		10^{-3} $in.lb.s^2$	0.77	0.62	0.53	0.49	0.56	0.50	0.47	0.45	0.44
Clamping hub diameter [mm] — G 24	J_1	$kgcm^2$	2.39	2.22	2.12	2.07	-	-	-	-	-
Optimized mass inertia version available on request		10^{-3} $in.lb.s^2$	2.12	1.96	1.88	1.83	-	-	-	-	-

Please use our sizing software cymex® for a detailed sizing – **www.wittenstein-cymex.com**

[a)] At max. 10 % M_{2KMax}
[b)] Valid for standard clamping hub diameter
[c)] Refers to center of the output shaft or flange
[d)] Please reduce input speed at higher ambient temperatures

View A | View B

Motor shaft diameter [mm]

2-stage

up to 19 [4] (E) [5] clamping hub diameter

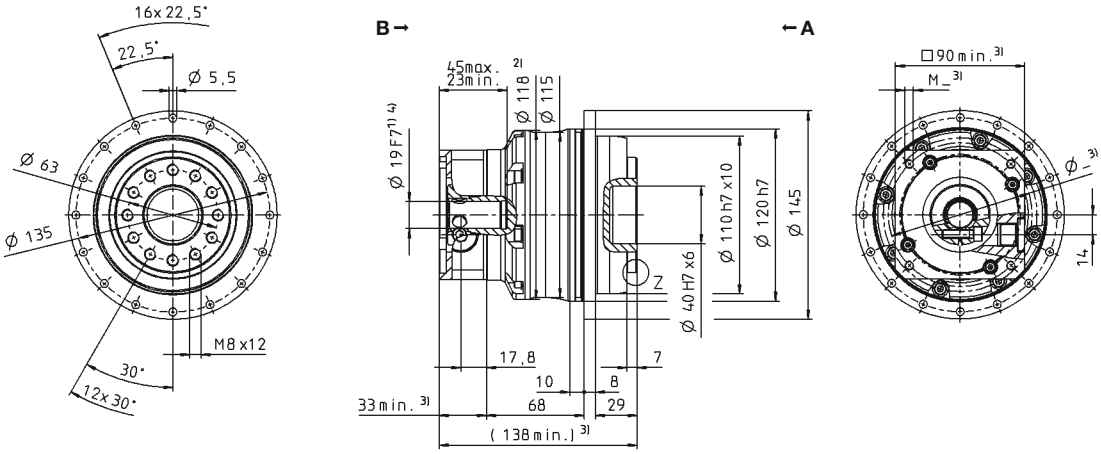

up to 24 [4] (G) clamping hub diameter

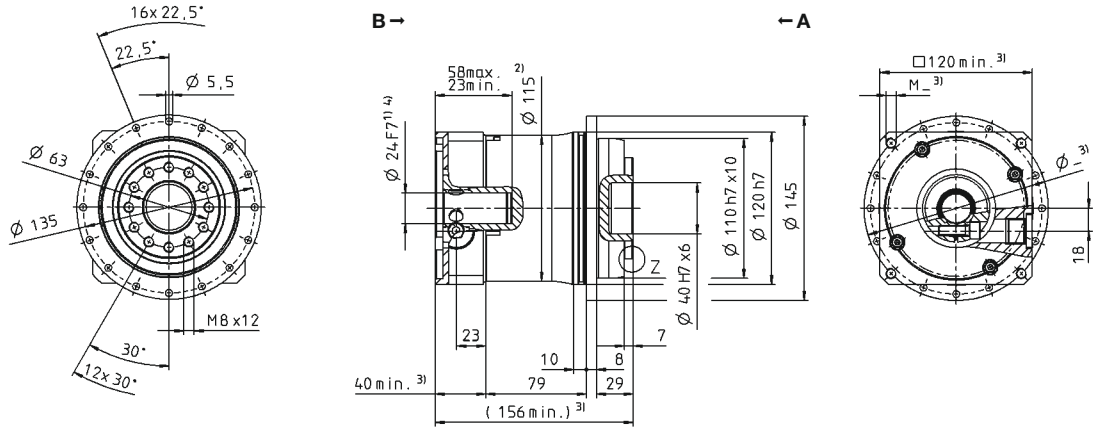

3-stage

up to 19 [4] (E) [5] clamping hub diameter

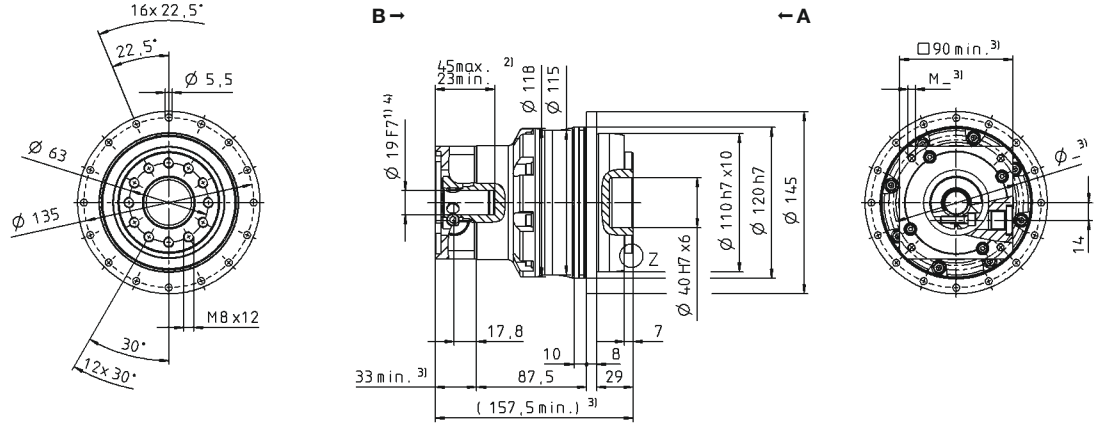

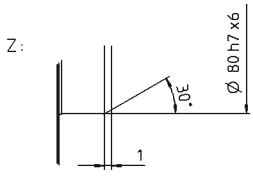

Non-tolerated dimensions are nominal dimensions

1) Check motor shaft fit
2) Min./Max. permissible motor shaft length. Longer motor shafts are possible, please contact alpha.
3) The dimensions depend on the motor
4) Smaller motor shaft diameter is compensated by a bushing with a minimum thickness of 1 mm
5) Standard clamping hub diameter

TP+ 050 MA 2-/3-stage

			2-stage				3-stage				
Ratio	i		**22**	**27.5**	**38.5**	**55**	**66**	**88**	**110**	**154**	**220**
Max. torque [a) b)]	T_{2a}	*Nm*	1402	1402	1402	1402	1402	1402	1402	1402	1402
		in.lb	12406	12406	12406	12406	12406	12406	12406	12406	12406
Max. acceleration torque [b)] (max. 1000 cycles per hour)	T_{2B}	*Nm*	992	992	992	992	992	992	992	992	992
		in.lb	8780	8780	8780	8780	8780	8780	8780	8780	8780
Nominal torque (at n_{1N})	T_{2N}	*Nm*	523	566	638	717	723	794	794	794	794
		in.lb	4632	5005	5649	6348	6400	7024	7024	7024	7024
Emergency stop torque [a) b)] (permitted 1000 times during the service life of the gearbox)	T_{2Not}	*Nm*	2375	2375	2375	2375	2375	2375	2375	2375	2375
		in.lb	21021	21021	21021	21021	21021	21021	21021	21021	21021
Permitted average input speed (at T_{2N} and 20 °C ambient temperature) [d)]	n_{1N}	*rpm*	3000	3000	3000	3000	3500	3500	3500	3500	3500
Max. input speed	n_{1Max}	*rpm*	6250	6250	6250	6250	6250	6250	6250	6250	6250
Mean no load running torque [b)] (at n_1 = 3000 rpm and 20 °C gearbox temperature)	T_{012}	*Nm*	2.7	2.4	2.1	1.7	1.8	1.3	1.1	0.9	0.72
		in.lb	23.9	21.2	18.9	15.0	15.9	11.5	10.1	8.0	6.4
Max. backlash	j_t	*arcmin*	≤ 1								
Torsional rigidity [b)]	C_{t21}	*Nm/arcmin*	220	220	220	220	205	205	205	205	205
		in.lb/arcmin	1947	1947	1947	1947	1814	1814	1814	1814	1814
Tilting rigidity	C_{2K}	*Nm/arcmin*	560								
		in.lb/arcmin	4956								
Max. axial force [c)]	F_{2AMax}	*N*	6130								
		lb_f	1379								
Max. tilting moment	M_{2KMax}	*Nm*	1335								
		in.lb	11816								
Efficiency at full load	η	%	94				92				
Service life	L_h	*h*	> 20000								
Weight (incl. standard adapter plate)	m	*kg*	12.5				13.4				
		lb_m	27.6				29.6				
Operating noise (at reference ratio and reference speed – ratio-specific values available in cymex®)	L_{PA}	*dB(A)*	≤ 60				≤ 57				
Max. permitted housing temperature		*°C*	+90								
		F	194								
Ambient temperature		*°C*	–15 to +40								
		F	5 to 104								
Lubrication			Lubricated for life								
Direction of rotation			In- and output same direction								
Protection class			IP 65								
Metal bellows coupling (recommended product type – validate sizing with cymex®)			BCT-00300AAX-080.00								
Bore diameter of coupling on the application side		*mm*	X = 045.000 - 056.000								
Mass moment of inertia (relates to the drive) G 24	J_1	$kgcm^2$	3.80	3.33	3.00	2.80	2.60	2.40	2.20	2.10	2.10
		10^{-3} $in.lb.s^2$	3.36	2.95	2.66	2.48	2.30	2.10	1.90	1.90	1.90
Clamping hub diameter [mm] / Optimized mass inertia version available on request K 38	J_1	$kgcm^2$	10.7	10.3	9.90	9.70	-	-	-	-	-
		10^{-3} $in.lb.s^2$	9.47	9.12	8.76	8.58	-	-	-	-	-

Please use our sizing software cymex® for a detailed sizing – **www.wittenstein-cymex.com**

[a)] At max. 10 % M_{2KMax}
[b)] Valid for standard clamping hub diameter
[c)] Refers to center of the output shaft or flange
[d)] Please reduce input speed at higher ambient temperatures

View A | View B

Motor shaft diameter [mm]

2-stage

up to 24 [4] (G) [5] clamping hub diameter

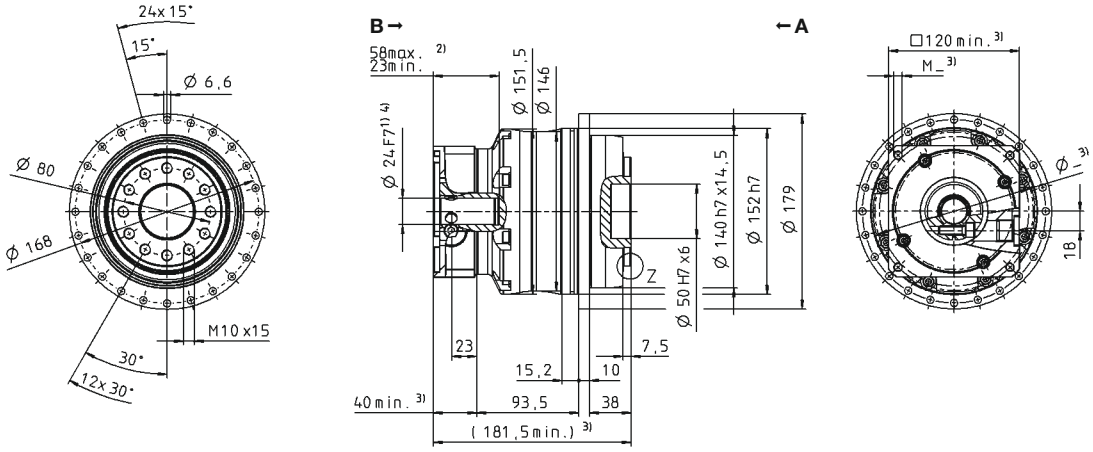

up to 38 [4] (K) clamping hub diameter

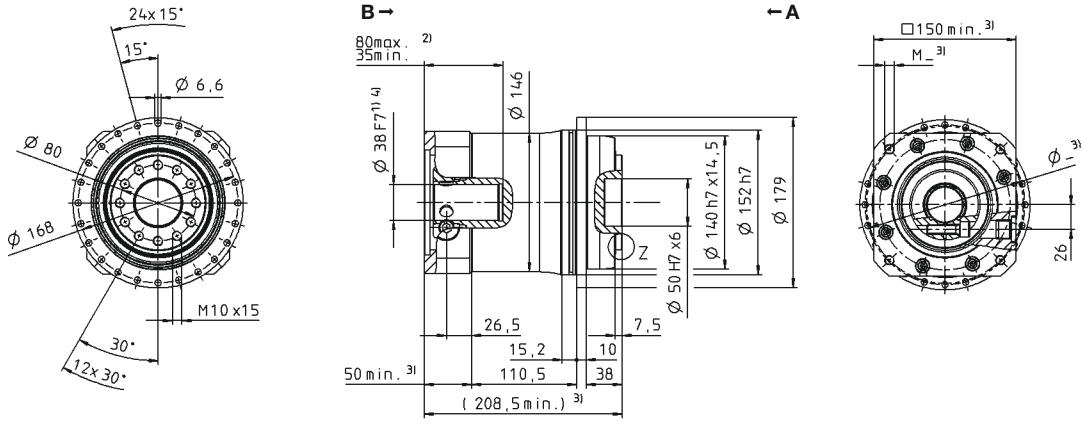

3-stage

up to 24 [4] (G) [5] clamping hub diameter

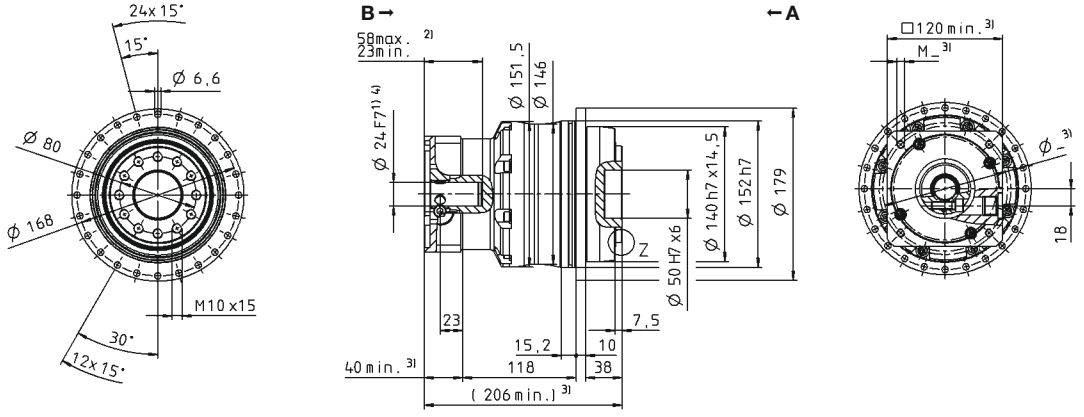

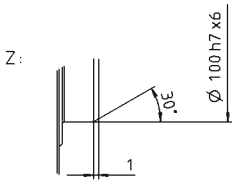

Non-tolerated dimensions are nominal dimensions
[1] Check motor shaft fit
[2] Min./Max. permissible motor shaft length. Longer motor shafts are possible, please contact alpha.
[3] The dimensions depend on the motor
[4] Smaller motor shaft diameter is compensated by a bushing with a minimum thickness of 1 mm
[5] Standard clamping hub diameter

TP+ 110 MA 2-/3-stage

			2-stage				3-stage				
Ratio	i		**22**	**27.5**	**38.5**	**55**	**66**	**88**	**110**	**154**	**220**
Max. torque [a) b)]	T_{2a}	*Nm*	3822	3822	3822	3200	3023	3023	3023	3023	3023
		in.lb	33826	33826	33826	28323	26757	26757	26757	26757	26757
Max. acceleration torque [b)] (max. 1000 cycles per hour)	T_{2B}	*Nm*	3100	3100	3100	2400	2600	2600	2600	2600	2600
		in.lb	27437	27437	27437	21242	23012	23012	23012	23012	23012
Nominal torque (at n_{1N})	T_{2N}	*Nm*	1546	1662	2149	1827	1649	1797	1924	2080	2080
		in.lb	13687	14708	19022	16169	14593	15909	17033	18410	18410
Emergency stop torque [a) b)] (permitted 1000 times during the service life of the gearbox)	T_{2Not}	*Nm*	6500	6500	6500	6500	6500	6500	6500	6500	6500
		in.lb	57530	57530	57530	57530	57530	57530	57530	57530	57530
Permitted average input speed (at T_{2N} and 20 °C ambient temperature) [d)]	n_{1N}	*rpm*	2500	2500	2500	2500	3000	3000	3000	3000	3000
Max. input speed	n_{1Max}	*rpm*	5625	5625	5625	5625	5625	5625	5625	5625	5625
Mean no load running torque [b)] (at n_1 = 3000 rpm and 20 °C gearbox temperature)	T_{012}	*Nm*	6.1	5.5	4.8	4.3	3.8	3.0	2.6	1.8	1.6
		in.lb	54.0	48.7	42.5	38.1	33.6	26.9	23	15.6	14.2
Max. backlash	j_t	*arcmin*	≤ 1								
Torsional rigidity [b)]	C_{t21}	*Nm/arcmin*	730	725	715	670	650	650	650	650	650
		in.lb/arcmin	6461	6417	6328	5930	5753	5753	5753	5753	5753
Tilting rigidity	C_{2K}	*Nm/arcmin*	1452								
		in.lb/arcmin	12851								
Max. axial force [c)]	F_{2AMax}	*N*	10050								
		lb_f	2261								
Max. tilting moment	M_{2KMax}	*Nm*	3280								
		in.lb	29031								
Efficiency at full load	η	%	94								
Service life	L_h	*h*	> 20000								
Weight (incl. standard adapter plate)	m	*kg*	33.1				35.4				
		lb_m	73.2				78.2				
Operating noise (at reference ratio and reference speed – ratio-specific values available in cymex®)	L_{PA}	*dB(A)*	≤ 61				≤ 59				
Max. permitted housing temperature		*°C*	+90								
		F	194								
Ambient temperature		*°C*	–15 to +40								
		F	5 to 104								
Lubrication			Lubricated for life								
Direction of rotation			In- and output same direction								
Protection class			IP 65								
Metal bellows coupling (recommended product type – validate sizing with cymex®)			BCT-01500AAX-125.00								
Bore diameter of coupling on the application side		*mm*	X = 055.000 - 070.000								
Mass moment of inertia (relates to the drive) K 38	J_1	$kgcm^2$	16.6	15.2	13.9	13.1	13.8	10.2	9.80	9.50	9.20
		10^{-3} $in.lb.s^2$	14.7	13.5	12.3	11.6	12.2	9.00	8.70	8.40	8.10
Clamping hub diameter [mm] M 48	J_1	$kgcm^2$	31.4	29.9	28.7	28.0	-	-	-	-	-
Optimized mass inertia version available on request		10^{-3} $in.lb.s^2$	27.8	26.5	25.4	24.8	-	-	-	-	-

Please use our sizing software cymex® for a detailed sizing – **www.wittenstein-cymex.com**

[a)] At max. 10 % M_{2KMax}
[b)] Valid for standard clamping hub diameter
[c)] Refers to center of the output shaft or flange
[d)] Please reduce input speed at higher ambient temperatures

View A | View B

Motor shaft diameter [mm]

2-stage

up to 38 [4] (K) [5] clamping hub diameter

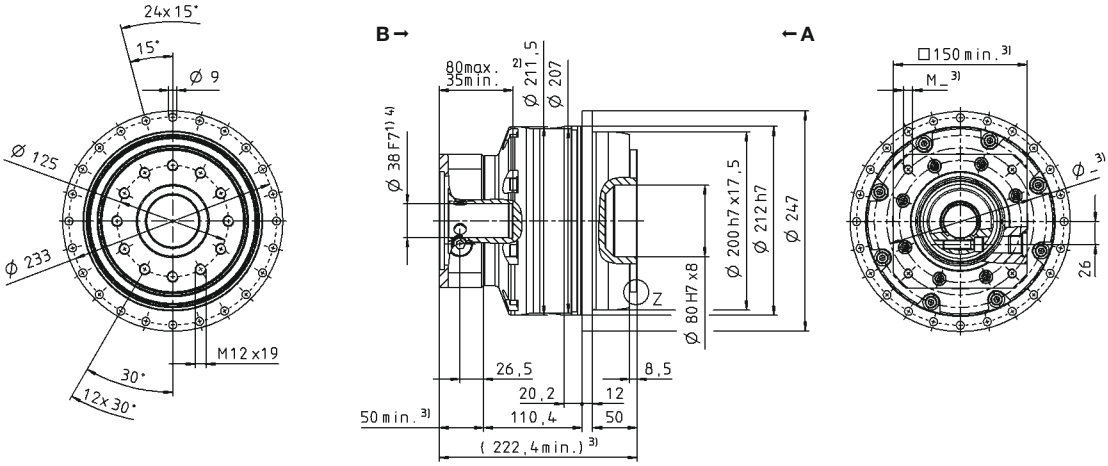

up to 48 [4] (M) clamping hub diameter

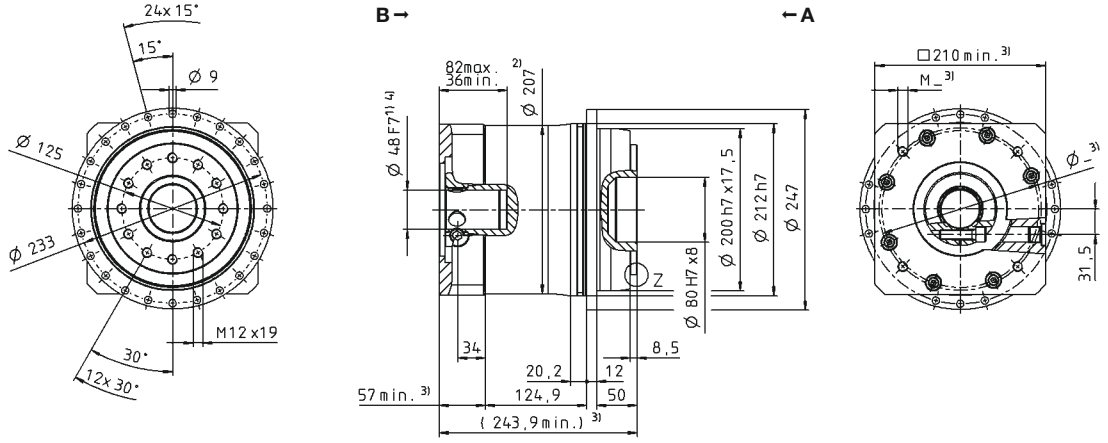

3-stage

up to 38 [4] (K) [5] clamping hub diameter

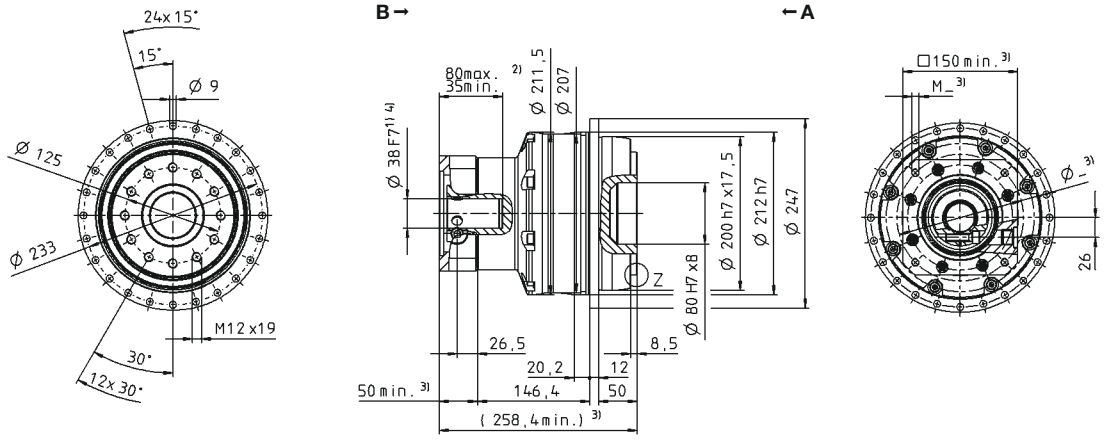

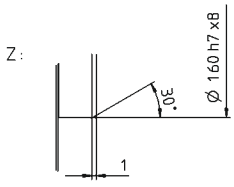

Non-tolerated dimensions are nominal dimensions

1) Check motor shaft fit
2) Min./Max. permissible motor shaft length. Longer motor shafts are possible, please contact alpha.
3) The dimensions depend on the motor
4) Smaller motor shaft diameter is compensated by a bushing with a minimum thickness of 1 mm
5) Standard clamping hub diameter

TP+ 300 MA 1-/2-/3-stage

			1-stage	2-stage				3-stage				
Ratio	*i*		**5.5**	**22**	**27.5**	**38.5**	**55**	**66**	**88**	**110**	**154**	**220**
Max. torque [a) b)]	T_{2a}	*Nm*	7360	7535	7535	7535	5473	6987	6987	6987	6987	6987
		in.lb	65142	66691	66691	66691	48436	61838	61838	61838	61838	61838
Max. acceleration torque [b)] (max. 1000 cycles per hour)	T_{2B}	*Nm*	5520	6600	6600	6600	4680	6600	6600	6600	6600	6600
		in.lb	48856	58415	58415	58415	41422	58415	58415	58415	58415	58415
Nominal torque (at n_{1N})	T_{2N}	*Nm*	2829	3566	3788	3884	3744	3216	3506	3750	4148	4617
		in.lb	25035	31563	33530	34378	33137	28465	31035	33186	36711	40863
Emergency stop torque [a) b)] (permitted 1000 times during the service life of the gearbox)	T_{2Not}	*Nm*	10938	15333	15333	15296	15333	15333	15333	15333	15333	15333
		in.lb	96806	135709	135709	135377	135709	135709	135709	135709	135709	135709
Permitted average input speed (at T_{2N} and 20 °C ambient temperature) [d)]	n_{1N}	*rpm*	1000	2000	2000	2000	2000	2000	2000	2000	2000	2000
Max. input speed	n_{1Max}	*rpm*	3125	4375	4375	4375	4375	4375	4375	4375	4375	4375
Mean no load running torque [b)] (at n_1 = 2000 rpm and 20 °C gearbox temperature)	T_{012}	*Nm*	19	8.8	7.8	6.8	5.9	5.2	3.6	3.1	2.1	1.5
		in.lb	170	78	69	60	52	46	32	27	19	13
Max. backlash	j_t	*arcmin*	Standard ≤ 2 / Reduced ≤ 1	Standard ≤ 3 / Reduced ≤ 1.5								
Torsional rigidity [b)]	C_{t21}	*Nm/arcmin*	1200	1200	1200	1200	1200	1200	1200	1200	1200	1200
		in.lb/arcmin	10621	10621	10621	10621	10621	10621	10621	10621	10621	10621
Tilting rigidity	C_{2K}	*Nm/arcmin*	5560									
		in.lb/arcmin	49210									
Max. axial force [c)]	F_{2AMax}	*N*	33000									
		lb_f	7425									
Max. tilting moment	M_{2KMax}	*Nm*	3900	6500								
		in.lb	34518	57530								
Efficiency at full load	η	%	95	93								
Service life	L_h	*h*	> 20000									
Weight (incl. standard adapter plate)	*m*	*kg*	55	64				67				
		lb_m	122	141				148				
Operating noise (at reference ratio and reference speed – ratio-specific values available in cymex®)	L_{PA}	*dB(A)*	≤ 65	≤ 62				≤ 59				
Max. permitted housing temperature		*°C*	+90									
		F	194									
Ambient temperature		*°C*	–15 to +40									
		F	5 to 104									
Lubrication			Lubricated for life									
Direction of rotation			In- and output same direction									
Protection class			IP 65									
Metal bellows coupling (recommended product type – validate sizing with cymex®)			BCT-04000AAX-145.00									
Bore diameter of coupling on the application side		*mm*	X = 070.000 - 100.000									
Mass moment of inertia (relates to the drive) — K 38	J_1	$kgcm^2$	-	-	-	-	-	16.6	12.9	11.6	10.3	9.50
		10^{-3} $in.lb.s^2$	-	-	-	-	-	14.7	11.4	10.3	9.10	8.40
M 48	J_1	$kgcm^2$	-	30.8	27.6	24.9	23.0	-	-	-	-	-
		10^{-3} $in.lb.s^2$	-	27.3	24.4	22.0	20.4	-	-	-	-	-
N 55	J_1	$kgcm^2$	129	-	-	-	-	-	-	-	-	-
		10^{-3} $in.lb.s^2$	114	-	-	-	-	-	-	-	-	-

Clamping hub diameter [mm]

Optimized mass inertia version available on request

Please use our sizing software cymex® for a detailed sizing – **www.wittenstein-cymex.com**

[a)] At max. 10 % M_{2KMax}
[b)] Valid for standard clamping hub diameter
[c)] Refers to center of the output shaft or flange
[d)] Please reduce input speed at higher ambient temperatures

View A | View B

Motor shaft diameter [mm]

1-stage

up to 55 [4] (N) [5] clamping hub diameter

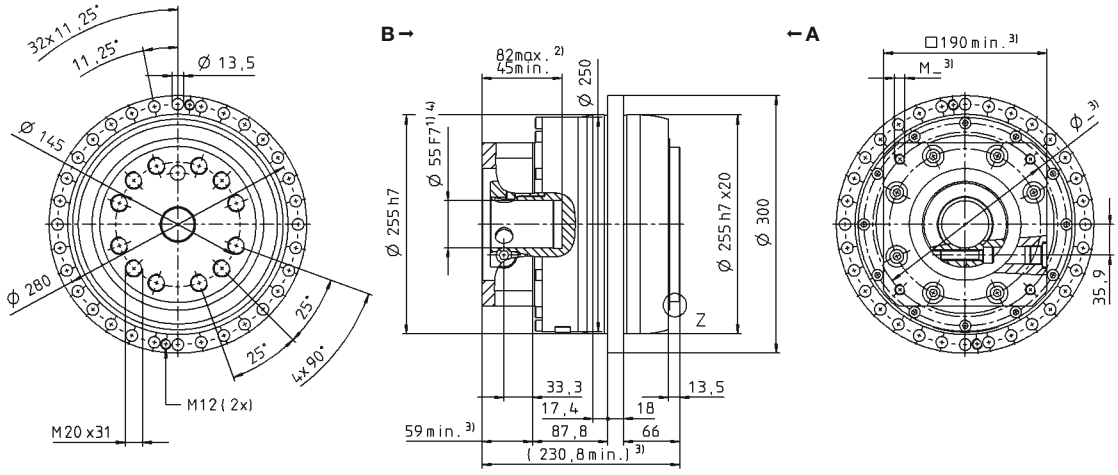

2-stage

up to 48 [4] (M) [5] clamping hub diameter

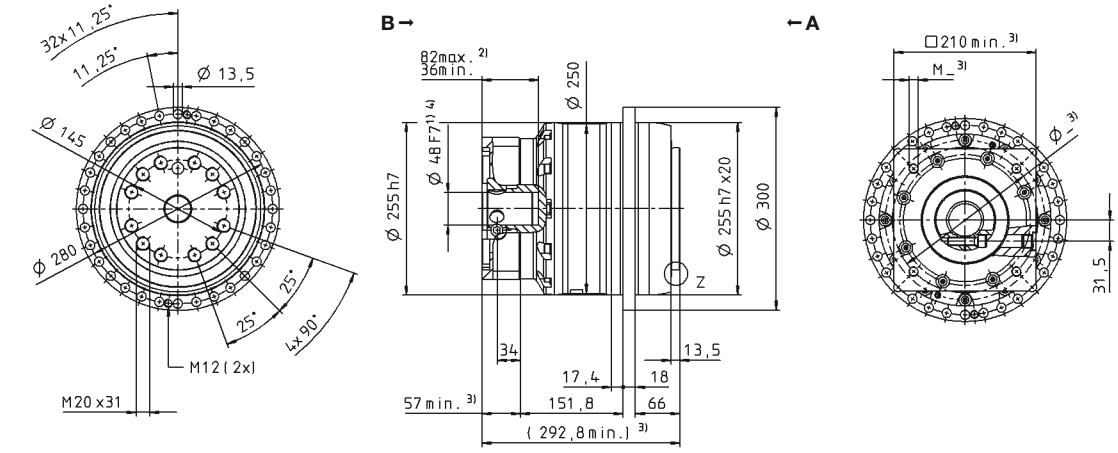

3-stage

up to 38 [4] (K) [5] clamping hub diameter

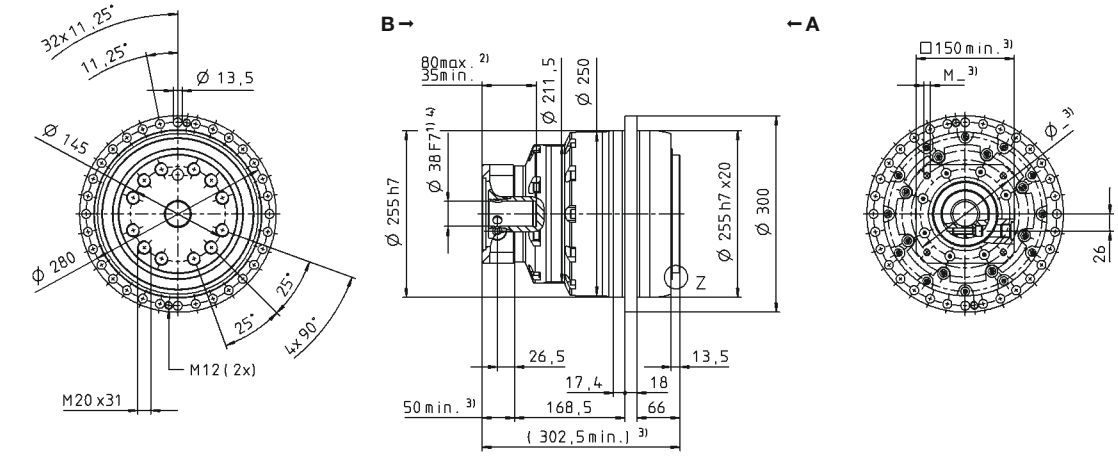

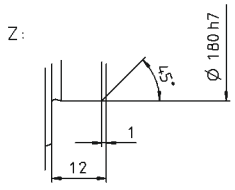

Non-tolerated dimensions are nominal dimensions

[1] Check motor shaft fit

[2] Min./Max. permissible motor shaft length. Longer motor shafts are possible, please contact alpha.

[3] The dimensions depend on the motor

[4] Smaller motor shaft diameter is compensated by a bushing with a minimum thickness of 1 mm

[5] Standard clamping hub diameter

TP+ 500 MA 1-/2-/3-stage

			1-stage	2-stage				3-stage				
Ratio	*i*		**5.5**	**22**	**27.5**	**38.5**	**55**	**66**	**88**	**110**	**154**	**220**
Max. torque [a) b)]	T_{2a}	*Nm*	10450	10450	10450	10450	10450	10450	10450	10450	10450	10450
		in.lb	92491	92491	92491	92491	92491	92491	92491	92491	92491	92491
Max. acceleration torque [b)] (max. 1000 cycles per hour)	T_{2B}	*Nm*	9600	10450	10450	10450	8640	10450	10450	10450	10450	10450
		in.lb	84968	92491	92491	92491	76471	92491	92491	92491	92491	92491
Nominal torque (at n_{1N})	T_{2N}	*Nm*	4313	5068	4980	5057	5325	4941	7464	7396	7546	7907
		in.lb	38174	44858	44075	44759	47129	43731	66060	65462	66792	69986
Emergency stop torque [a) b)] (permitted 1000 times during the service life of the gearbox)	T_{2Not}	*Nm*	18750	25000	25000	25000	25000	25000	25000	25000	25000	25000
		in.lb	165953	221270	221270	221270	221270	221270	221270	221270	221270	221270
Permitted average input speed (at T_{2N} and 20 °C ambient temperature) [d)]	n_{1N}	*rpm*	900	1500	1500	1500	1500	1500	1500	1500	1500	1500
Max. input speed	n_{1Max}	*rpm*	3125	4375	4375	4375	4375	4375	4375	4375	4375	4375
Mean no load running torque [b)] (at n_1 = 2000 rpm and 20 °C gearbox temperature)	T_{012}	*Nm*	27	11	10	8.9	7.8	6.8	5.0	4.7	3.6	3.0
		in.lb	241	100	89	79	69	60	45	42	32	27
Max. backlash	j_t	*arcmin*	Standard ≤ 2 / Reduced ≤ 1	Standard ≤ 3 / Reduced ≤ 1.5								
Torsional rigidity [b)]	C_{t21}	*Nm/arcmin*	2000	2000	2000	1950	1900	1800	1800	1800	1800	1800
		in.lb/arcmin	17702	17702	17702	17259	16817	15931	15931	15931	15931	15931
Tilting rigidity	C_{2K}	*Nm/arcmin*	9480									
		in.lb/arcmin	83906									
Max. axial force [c)]	F_{2AMax}	*N*	50000									
		lb_f	11250									
Max. tilting moment	M_{2KMax}	*Nm*	6600	9500								
		in.lb	58415	84083								
Efficiency at full load	η	%	95	93								
Service life	L_h	*h*	> 20000									
Weight (incl. standard adapter plate)	*m*	*kg*	80	80				89				
		lb_m	177	177				197				
Operating noise (at reference ratio and reference speed – ratio-specific values available in cymex®)	L_{PA}	*dB(A)*	≤ 70	≤ 63				≤ 60				
Max. permitted housing temperature		*°C*	+90									
		F	194									
Ambient temperature		*°C*	–15 to +40									
		F	5 to 104									
Lubrication			Lubricated for life									
Direction of rotation			In- and output same direction									
Protection class			IP 65									
Metal bellows coupling (recommended product type – validate sizing with cymex®)			BCT-10000AAX-166.00									
Bore diameter of coupling on the application side		*mm*	X = 080.000 - 180.000									
Mass moment of inertia (relates to the drive) Clamping hub diameter [mm] Optimized mass inertia version available on request — K 38	J_1	$kgcm^2$	-	-	-	-	-	17.9	13.5	11.9	10.5	9.70
		10^{-3} $in.lb.s^2$	-	-	-	-	-	15.8	11.9	10.5	9.30	8.60
M 48	J_1	$kgcm^2$	-	43.8	36.9	30.5	27.0	32.7	28.3	26.7	25.2	24.4
		10^{-3} $in.lb.s^2$	-	38.8	32.7	27.0	23.9	28.9	25.0	23.6	22.3	21.6
O 60	J_1	$kgcm^2$	175	-	-	-	-	-	-	-	-	-
		10^{-3} $in.lb.s^2$	155	-	-	-	-	-	-	-	-	-

Please use our sizing software cymex® for a detailed sizing – **www.wittenstein-cymex.com**

[a)] At max. 10 % M_{2KMax}
[b)] Valid for standard clamping hub diameter
[c)] Refers to center of the output shaft or flange
[d)] Please reduce input speed at higher ambient temperatures

View A | View B

Motor shaft diameter [mm]

1-stage

up to 60 [4] (O) [5] clamping hub diameter

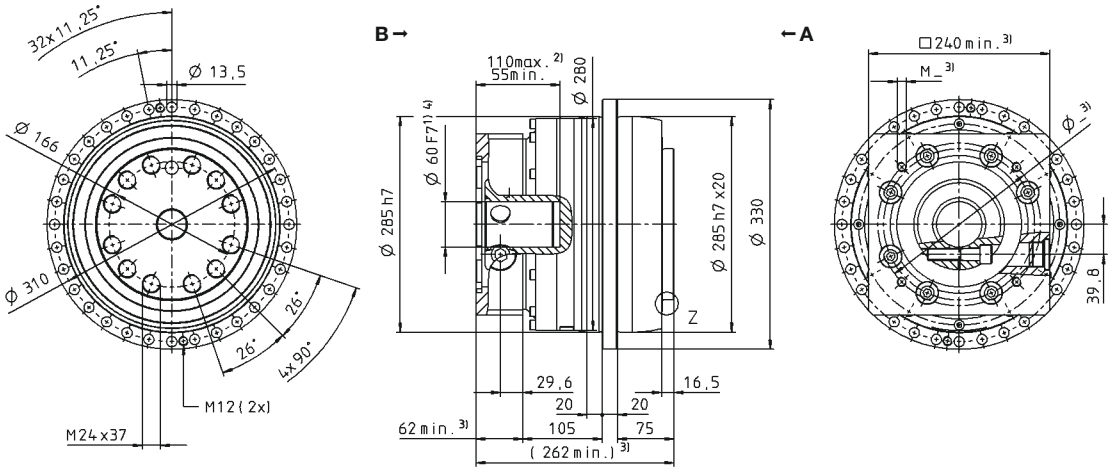

2-stage

up to 48 [4] (M) [5] clamping hub diameter

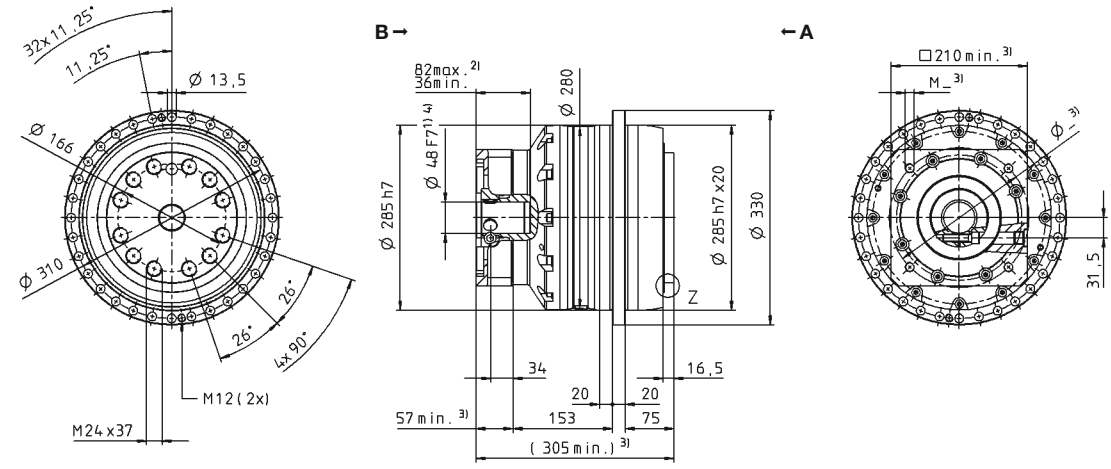

3-stage

up to 38/48 [4] (K/M [5]) clamping hub diameter

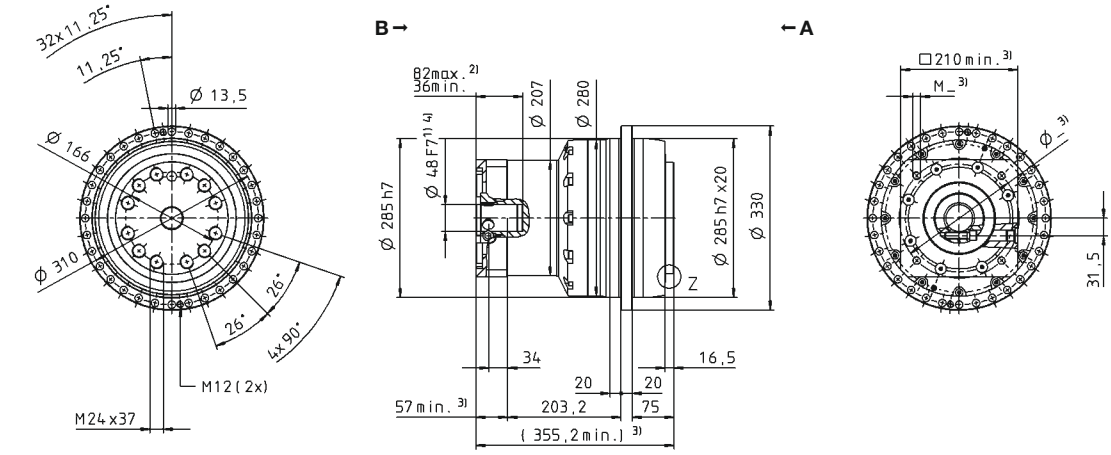

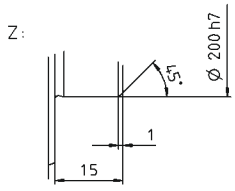

Non-tolerated dimensions are nominal dimensions

[1] Check motor shaft fit

[2] Min./Max. permissible motor shaft length. Longer motor shafts are possible, please contact alpha.

[3] The dimensions depend on the motor

[4] Smaller motor shaft diameter is compensated by a bushing with a minimum thickness of 1 mm

[5] Standard clamping hub diameter

TP+ 2000 MA 2-/3-stage

			2-stage		3-stage						
Ratio	i		**22**	**30.25**	**66**	**88**	**110**	**121**	**154**	**220**	**302.5**
Max. torque [a) b)]	T_{2a}	*Nm*	22000	22000	22000	22000	22000	22000	22000	15600	21500
		in.lb	194718	194718	194718	194718	194718	194718	194718	138072	190292
Max. acceleration torque [b)] (max. 1000 cycles per hour)	T_{2B}	*Nm*	22000	22000	22000	22000	22000	22000	22000	15600	21500
		in.lb	194718	194718	194718	194718	194718	194718	194718	138072	190292
Nominal torque (at n_{1N})	T_{2N}	*Nm*	13500	13500	13500	13500	13500	13500	13500	10000	13500
		in.lb	119486	119486	119486	119486	119486	119486	119486	88508	119486
Emergency stop torque [a) b)] (permitted 1000 times during the service life of the gearbox)	T_{2Not}	*Nm*	44000	44000	44000	44000	44000	44000	44000	44000	44000
		in.lb	389435	389435	389435	389435	389435	389435	389435	389435	389435
Permitted average input speed (at T_{2N} and 20 °C ambient temperature) [d)]	n_{1N}	*rpm*	2000	2000	2500	2500	2500	2500	2500	2500	2500
Max. input speed	n_{1Max}	*rpm*	3000	3000	3500	3500	3500	3500	3500	3500	3500
Mean no load running torque [b)] (at n_1 = 2000 rpm and 20 °C gearbox temperature)	T_{012}	*Nm*	17	13	7.5	6.0	5.0	5.0	4.5	4.0	4.0
		in.lb	151	115	66	53	44	44	40	35	35
Max. backlash	j_t	*arcmin*	≤ 3								
Torsional rigidity [b)]	C_{t21}	*Nm/arcmin*	2900	2900	3000	3000	3000	3000	2950	2850	2850
		in.lb/arcmin	25667	25667	26552	26552	26552	26552	26110	25225	25225
Tilting rigidity	C_{2K}	*Nm/arcmin*	13000								
		in.lb/arcmin	115060								
Max. axial force [c)]	F_{2AMax}	*N*	100000								
		lb_f	22500								
Max. tilting moment	M_{2KMax}	*Nm*	31600								
		in.lb	279685								
Efficiency at full load	η	%	95								
Service life	L_h	*h*	> 20000								
Weight (incl. standard adapter plate)	m	*kg*	190		185						
		lb_m	420		409						
Operating noise (at reference ratio and reference speed – ratio-specific values available in cymex®)	L_{PA}	*dB(A)*	≤ 68		≤ 66						
Max. permitted housing temperature		*°C*	+90								
		F	194								
Ambient temperature		*°C*	0 to +40								
		F	32 to 104								
Lubrication			Lubricated for life								
Direction of rotation			In- and output same direction								
Protection class			IP 65								
Metal bellows coupling (recommended product type – validate sizing with cymex®)			–								
Bore diameter of coupling on the application side		*mm*	–								
Mass moment of inertia (relates to the drive) — M 48	J_1	$kgcm^2$	-	-	52	37	35	35	28	26	25
		10^{-3} $in.lb.s^2$	-	-	46	33	31	31	25	23	22
Clamping hub diameter [mm] — N 55	J_1	$kgcm^2$	101	74	-	-	-	-	-	-	-
Optimized mass inertia version available on request		10^{-3} $in.lb.s^2$	89	65	-	-	-	-	-	-	-

Please use our sizing software cymex® for a detailed sizing – **www.wittenstein-cymex.com**

[a)] At max. 10 % M_{2KMax}
[b)] Valid for standard clamping hub diameter
[c)] Refers to center of the output shaft or flange
[d)] Please reduce input speed at higher ambient temperatures

View A | View B

Motor shaft diameter [mm]

2-stage

up to 55 [4] (N) [5] clamping hub diameter

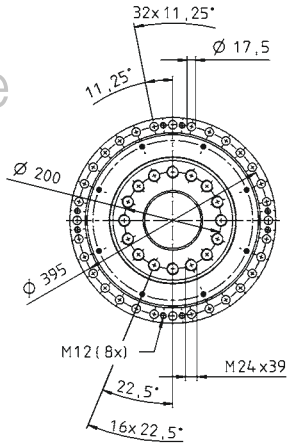

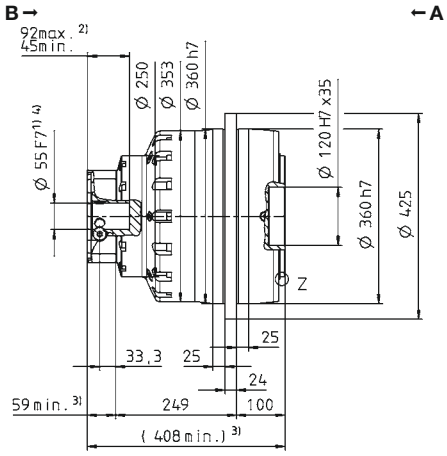

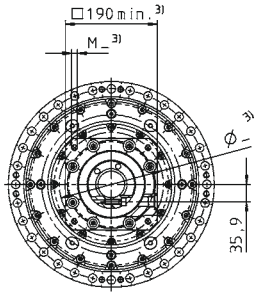

3-stage

up to 48 [4] (M) [5] clamping hub diameter

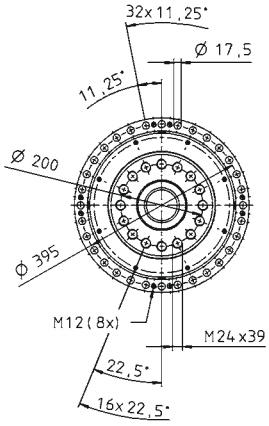

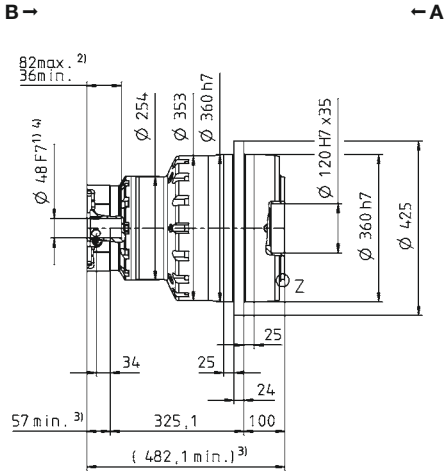

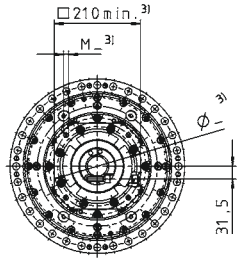

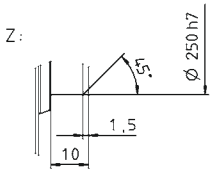

Non-tolerated dimensions are nominal dimensions
[1] Check motor shaft fit
[2] Min./Max. permissible motor shaft length. Longer motor shafts are possible, please contact alpha.
[3] The dimensions depend on the motor
[4] Smaller motor shaft diameter is compensated by a bushing with a minimum thickness of 1 mm
[5] Standard clamping hub diameter

TP+ 4000 MA 2- / 3-stage

			2-stage		3-stage						
Ratio	i		**22**	**30.25**	**66**	**88**	**110**	**121**	**154**	**220**	**302.5**
Max. torque [a) b)]	T_{2a}	*Nm*	40000	40000	40000	40000	40000	40000	40000	32000	40000
		in.lb	354032	354032	354032	354032	354032	354032	354032	283226	354032
Max. acceleration torque [b)] (max. 1000 cycles per hour)	T_{2B}	*Nm*	40000	40000	40000	40000	40000	40000	40000	32000	40000
		in.lb	354032	354032	354032	354032	354032	354032	354032	283226	354032
Nominal torque (at n_{1N})	T_{2N}	*Nm*	18000	18000	18000	18000	18000	18000	18000	16500	18000
		in.lb	159314	159314	159314	159314	159314	159314	159314	146038	159314
Emergency stop torque [a) b)] (permitted 1000 times during the service life of the gearbox)	T_{2Not}	*Nm*	70000	70000	70000	70000	70000	70000	70000	61000	70000
		in.lb	619556	619556	619556	619556	619556	619556	619556	539899	619556
Permitted average input speed (at T_{2N} and 20 °C ambient temperature) [d)]	n_{1N}	*rpm*	1500	1500	1500	1500	1500	1500	1500	1500	1500
Max. input speed	n_{1Max}	*rpm*	3000	3000	3000	3000	3000	3000	3000	3000	3000
Mean no load running torque [b)] (at n_1 = 2000 rpm and 20 °C gearbox temperature)	T_{012}	*Nm*	26	21	15	12	10	10	8.5	7.5	7.5
		in.lb	230	186	133	106	89	89	75	66	66
Max. backlash	j_t	*arcmin*	≤ 4								
Torsional rigidity [b)]	C_{t21}	*Nm/arcmin*	5300	5300	5800	5800	5800	5800	5700	5700	5700
		in.lb/arcmin	46909	46909	51335	51335	51335	51335	50450	50450	50450
Tilting rigidity	C_{2K}	*Nm/arcmin*	65000								
		in.lb/arcmin	575302								
Max. axial force [c)]	F_{2AMax}	*N*	140000								
		lb_f	31500								
Max. tilting moment	M_{2KMax}	*Nm*	58000		71400						
		in.lb	513346		631947						
Efficiency at full load	η	%	95		93						
Service life	L_h	*h*	> 20000								
Weight (incl. standard adapter plate)	m	*kg*	350		380						
		lb_m	774		840						
Operating noise (at reference ratio and reference speed – ratio-specific values available in cymex®)	L_{PA}	*dB(A)*	≤ 70		≤ 68						
Max. permitted housing temperature		°C	+90								
		F	194								
Ambient temperature		°C	0 to +40								
		F	32 to 104								
Lubrication			Lubricated for life								
Direction of rotation			In- and output same direction								
Protection class			IP 65								
Metal bellows coupling (recommended product type – validate sizing with cymex®)			–								
Bore diameter of coupling on the application side		*mm*	–								
Mass moment of inertia (relates to the drive) — M 48	J_1	$kgcm^2$	-	-	85	55	43	48	34	29	28
		10^{-3} $in.lb.s^2$	-	-	75	49	38	42	30	26	25
Clamping hub diameter [mm] — O 60	J_1	$kgcm^2$	230	174	-	-	-	-	-	-	-
Optimized mass inertia version available on request		10^{-3} $in.lb.s^2$	204	154	-	-	-	-	-	-	-

Please use our sizing software cymex® for a detailed sizing – **www.wittenstein-cymex.com**

[a)] At max. 10 % M_{2KMax}
[b)] Valid for standard clamping hub diameter
[c)] Refers to center of the output shaft or flange
[d)] Please reduce input speed at higher ambient temperatures

View A | View B

Motor shaft diameter [mm]

2-stage

up to 60 [4] (O) [5] clamping hub diameter

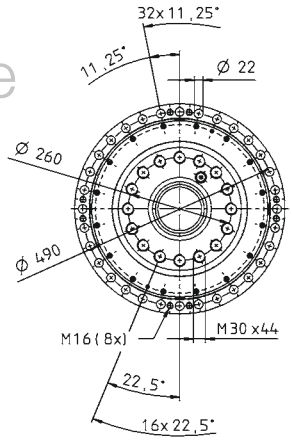

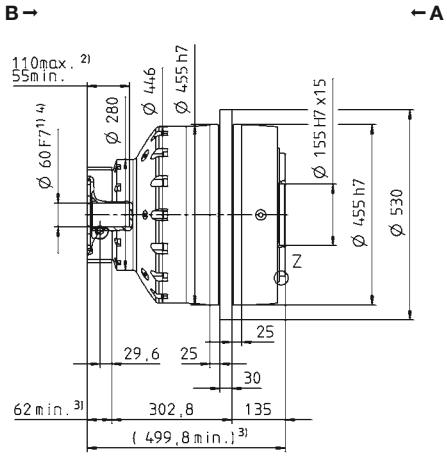

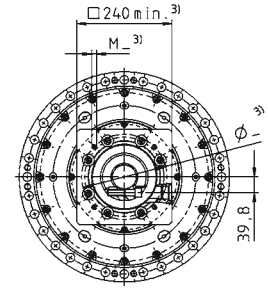

3-stage

up to 48 [4] (M) [5] clamping hub diameter

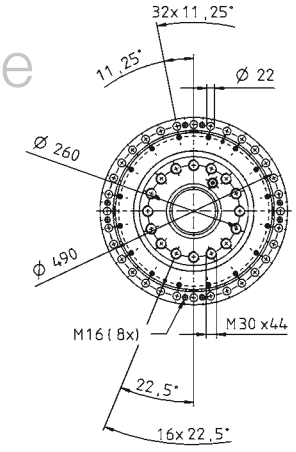

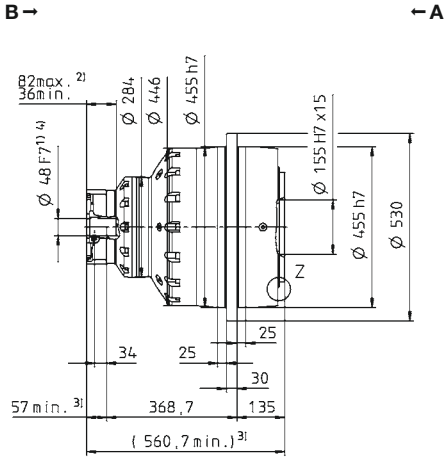

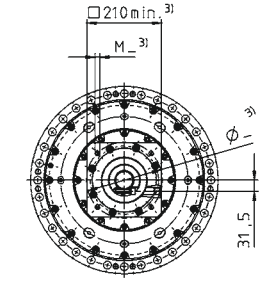

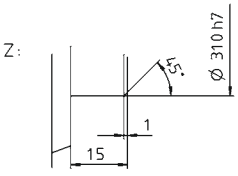

Non-tolerated dimensions are nominal dimensions
[1] Check motor shaft fit
[2] Min./Max. permissible motor shaft length. Longer motor shafts are possible, please contact alpha.
[3] The dimensions depend on the motor
[4] Smaller motor shaft diameter is compensated by a bushing with a minimum thickness of 1 mm
[5] Standard clamping hub diameter

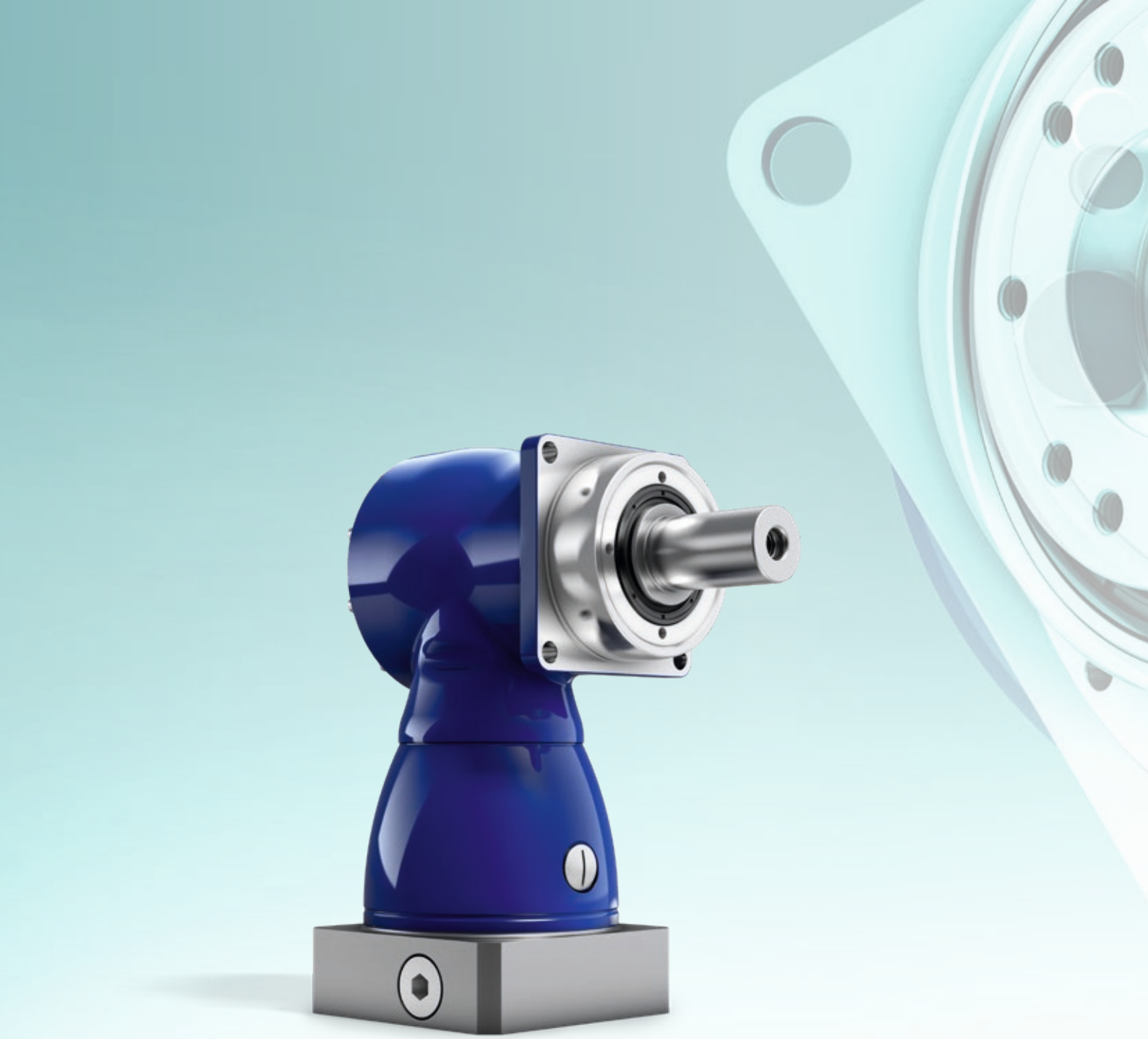

Hypoid gearboxes

HG+ / SK+ / SPK+

TK+ / TPK+ / TPK+ HIGH TORQUE

Precise and highly dynamic

HG⁺ – Precise hollow shaft solution

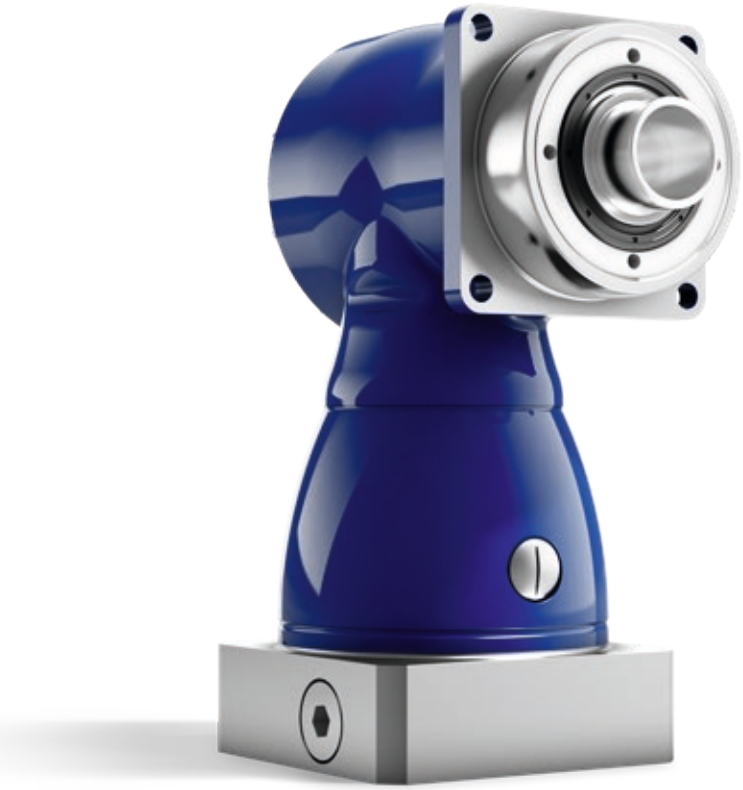

HG⁺

The versatile hypoid gearboxes of the alpha Advanced Line are available with a hollow shaft on one or both sides. With the HG⁺, the low torsional backlash and high torsional rigidity assure maximum positioning accuracy of the drives and the high precision of machines – even during highly dynamic operation.

Product highlights

Max. torsional backlash [arcmin] ≤ 4

Hollow shaft version

Multiple output configurations

for greater flexibility

Extremely smooth-running

Other gearbox models
Corrosion resistant design, ATEX

The HG⁺ compared to the industry standard

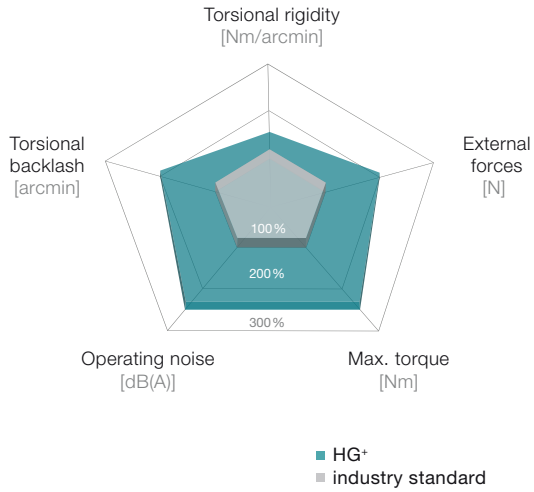

HG⁺ in corrosion-resistant design

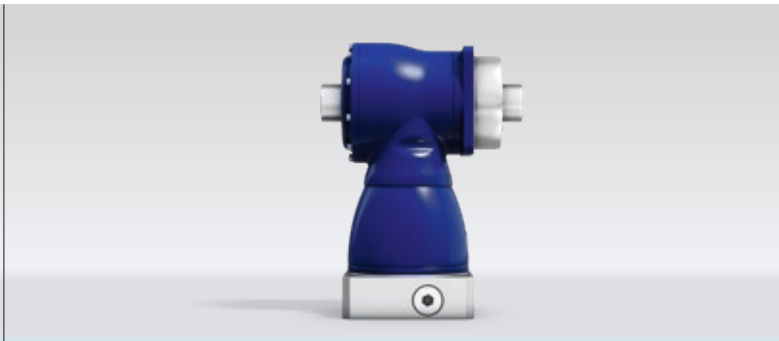

HG⁺ with hollow shaft on both sides

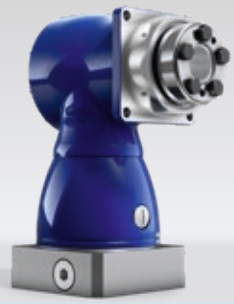

HG+ with shrink disk

HG+ 060 MF 1-/2-stage

			1-stage					2-stage									
Ratio	*i*		**3**	**4**	**5**	**7**	**10**	**12**	**16**	**20**	**25**	**28**	**35**	**40**	**50**	**70**	**100**
Max. torque [a) b)]	T_{2a}	*Nm*	36	36	36	25	20	12	16	20	25	28	35	40	50	70	100
		in.lb	319	319	319	221	177	36	36	36	36	36	36	36	36	25	20
Max. acceleration torque [b)] (max. 1000 cycles per hour)	T_{2B}	*Nm*	30	30	30	25	20	30	30	30	30	30	30	30	30	25	20
		in.lb	266	266	266	221	177	266	266	266	266	266	266	266	266	221	177
Nominal torque (at n_{1N})	T_{2N}	*Nm*	22	22	22	20	15	319	319	319	319	319	319	319	319	221	177
		in.lb	195	195	195	177	133	22	22	22	22	22	22	22	22	20	15
Emergency stop torque [a) b)] (permitted 1000 times during the service life of the gearbox)	T_{2Not}	*Nm*	40	50	50	45	40	195	195	195	195	195	195	195	195	177	133
		in.lb	354	443	443	398	354	50	50	50	50	50	50	50	50	45	40
Permitted average input speed (at T_{2N} and 20 °C ambient temperature) [d)]	n_{1N}	n_{1T}	2500	2700	3000	3000	3000	4400	4400	4400	4400	4400	4400	4400	4800	5500	5500
Max. input speed	n_{1Max}	*rpm*	7500	7500	7500	7500	7500	6000	6000	6000	6000	6000	6000	6000	6000	6000	6000
Mean no load running torque [b)] (at n_1 = 3000 rpm and 20 °C gearbox temperature)	T_{012}	*Nm*	1.3	1.2	1.1	1.3	1.2	0.2	0.2	0.2	0.2	0.2	0.2	0.1	0.1	0.1	0.1
		in.lb	12	11	10	12	11	2	2	2	2	2	2	1	1	1	1
Max. backlash	j_t	*arcmin*	Standard ≤ 5														
Torsional rigidity [b)]	C_{t21}	*Nm/arcmin*	2.2	2.3	2.4	2.2	1.9	2.3	2.3	2.3	2.3	2.3	2.3	2.3	2.4	2.2	1.9
		in.lb/arcmin	19	20	21	19	17	20	20	20	20	20	20	20	21	19	17
Max. axial force [c)]	F_{2AMax}	*N*	2400														
		lb_f	540														
Max. lateral force [c)]	F_{2QMax}	*N*	2700														
		lb_f	608														
Max. tilting moment	M_{2KMax}	*Nm*	251														
		in.lb	2222														
Efficiency at full load	η	%	96					94									
Service life	L_h	*h*	> 20000														
Weight (incl. standard adapter plate)	*m*	*kg*	2.9					3.2									
		lb_m	6					7									
Operating noise (at reference ratio and reference speed – ratio-specific values available in cymex®)	L_{PA}	*dB(A)*	≤ 64														
Max. permitted housing temperature		*°C*	+90														
		F	194														
Ambient temperature		*°C*	0 to +40														
		F	32 to 104														
Lubrication			Lubricated for life														
Direction of rotation			In- and output opposite direction														
Protection class			IP 65														
Shrink disc (Standard version)			SD 018x044 S2														
Max. torque (without axial force)	T_{max}	*Nm*	100														
Mass moment of inertia (relates to the drive) B 11	J_1	$kgcm^2$	-	-	-	-	-	0.09	0.09	0.07	0.07	0.06	0.06	0.06	0.06	0.06	0.06
		10^{-3} $in.lb.s^2$	-	-	-	-	-	0.08	0.08	0.06	0.06	0.05	0.05	0.05	0.05	0.05	0.05
Mass moment of inertia (relates to the drive) C 14	J_1	$kgcm^2$	0.52	0.44	0.4	0.36	0.34	0.2	0.2	0.19	0.19	0.18	0.18	0.17	0.17	0.17	0.17
		10^{-3} $in.lb.s^2$	0.46	0.39	0.35	0.32	0.3	0.18	0.18	0.17	0.17	0.16	0.16	0.15	0.15	0.15	0.15
Mass moment of inertia (relates to the drive) E 19	J_1	$kgcm^2$	0.87	0.79	0.75	0.71	0.7	-	-	-	-	-	-	-	-	-	-
		10^{-3} $in.lb.s^2$	0.77	0.7	0.66	0.63	0.62	-	-	-	-	-	-	-	-	-	-

Clamping hub diameter [mm]

Please use our sizing software cymex® for a detailed sizing – **www.wittenstein-cymex.com**
Please contact us for optimum sizing at S1 conditions (Continuous operation).

[a)] At max. 10 % F_{2QMax}
[b)] Valid for standard clamping hub diameter
[c)] Refers to center of the output shaft or flange
[d)] Please reduce input speed at higher ambient temperatures

View A

Motor shaft diameter [mm]

1-stage

up to 14/19 [4]
(C [6]/E) clamping hub diameter

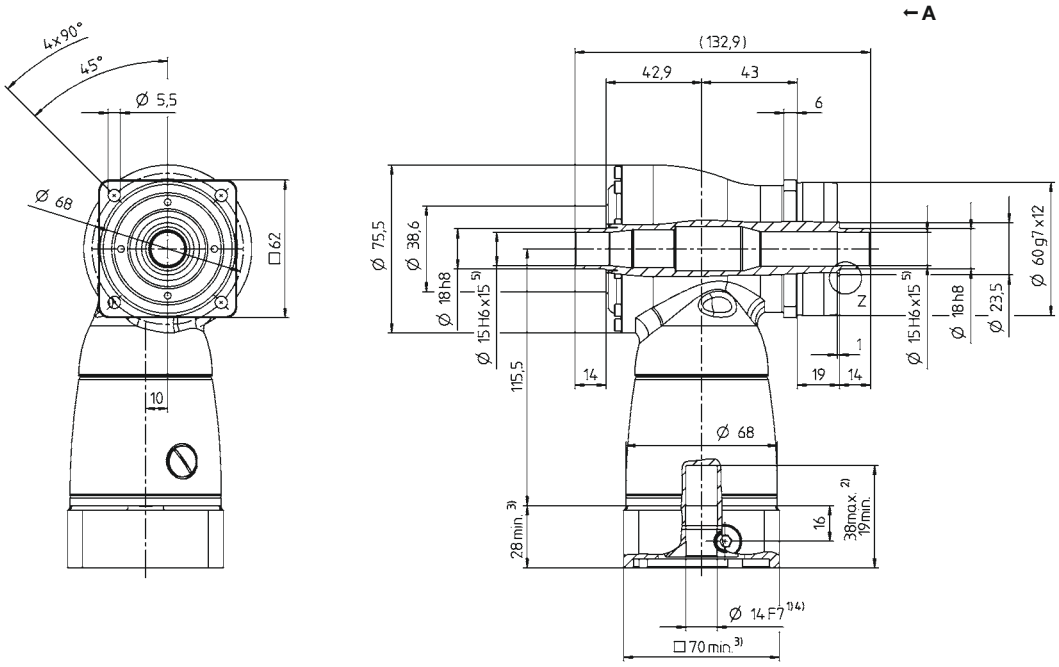

2-stage

up to 11/14 [4]
(B [6]/C) clamping hub diameter

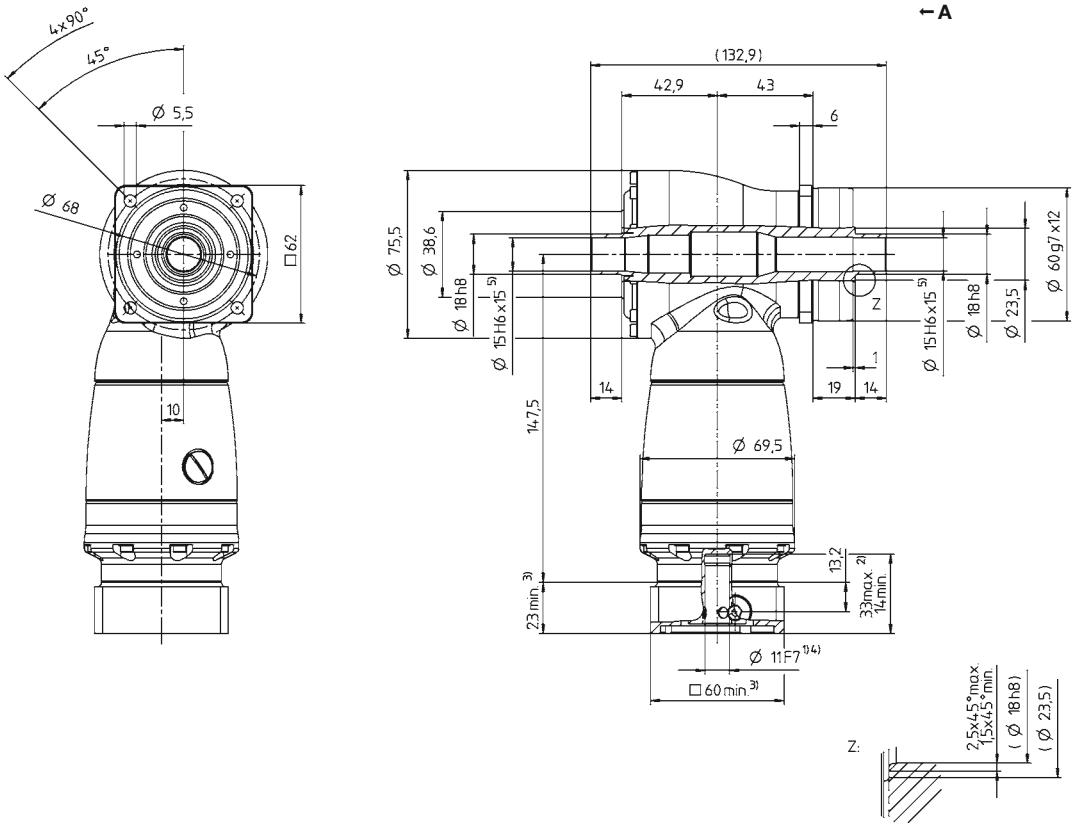

See technical data sheet for available clamping hub diameters (mass moment of inertia). Dimensions available on request.

Non-tolerated dimensions are nominal dimensions

1) Check motor shaft fit
2) Min./Max. permissible motor shaft length. Longer motor shafts are possible, please contact alpha.
3) The dimensions depend on the motor
4) Smaller motor shaft diameter is compensated by a bushing with a minimum thickness of 1 mm
5) Tolerance h6 for mounted shaft.
6) Standard clamping hub diameter

HG+ 075 MF 1-/2-stage

			1-stage					2-stage									
Ratio	*i*		**3**	**4**	**5**	**7**	**10**	**12**	**16**	**20**	**25**	**28**	**35**	**40**	**50**	**70**	**100**
Max. torque [a) b)]	T_{2a}	*Nm*	84	84	84	60	50	84	84	84	84	84	84	84	84	60	50
		in.lb	743	743	743	531	443	743	743	743	743	743	743	743	743	531	443
Max. acceleration torque [b)] (max. 1000 cycles per hour)	T_{2B}	*Nm*	70	70	70	60	50	70	70	70	70	70	70	70	70	60	50
		in.lb	620	620	620	531	443	620	620	620	620	620	620	620	620	531	443
Nominal torque (at n_{1N})	T_{2N}	*Nm*	50	50	50	45	40	50	50	50	50	50	50	50	50	45	40
		in.lb	443	443	443	398	354	443	443	443	443	443	443	443	443	398	354
Emergency stop torque [a) b)] (permitted 1000 times during the service life of the gearbox)	T_{2Not}	*Nm*	95	115	115	110	100	115	115	115	115	115	115	115	115	110	100
		in.lb	841	1018	1018	974	885	1018	1018	1018	1018	1018	1018	1018	1018	974	885
Permitted average input speed (at T_{2N} and 20 °C ambient temperature) [d)]	n_{1N}	n_{1T}	2300	2500	2800	2800	2800	3500	3500	3500	3500	3500	3500	3500	3800	4500	4500
Max. input speed	n_{1Max}	*rpm*	7500	7500	7500	7500	7500	6000	6000	6000	6000	6000	6000	6000	6000	6000	6000
Mean no load running torque [b)] (at n_1 = 3000 rpm and 20 °C gearbox temperature)	T_{012}	*Nm*	2.2	1.9	1.7	2.2	2	0.3	0.3	0.2	0.2	0.2	0.2	0.1	0.1	0.1	0.1
		in.lb	19	17	15	19	18	3	3	2	2	2	2	1	1	1	1
Max. backlash	j_t	*arcmin*	Standard ≤ 4														
Torsional rigidity [b)]	C_{t21}	*Nm/arcmin*	5.3	5.9	6.7	6.6	6.5	5.9	5.9	5.9	5.9	5.9	5.9	5.9	6.7	6.6	6.5
		in.lb/arcmin	47	52	59	58	58	52	52	52	52	52	52	52	59	58	58
Max. axial force [c)]	F_{2AMax}	*N*	3400														
		lb_f	765														
Max. lateral force [c)]	F_{2QMax}	*N*	4000														
		lb_f	900														
Max. tilting moment	M_{2KMax}	*Nm*	437														
		in.lb	3868														
Efficiency at full load	η	%	96					94									
Service life	L_h	*h*	> 20000														
Weight (incl. standard adapter plate)	*m*	*kg*	4.8					5.1									
		lb_m	11					11									
Operating noise (at reference ratio and reference speed – ratio-specific values available in cymex®)	L_{PA}	*dB(A)*	≤ 66														
Max. permitted housing temperature		*°C*	+90														
		F	194														
Ambient temperature		*°C*	0 to +40														
		F	32 to 104														
Lubrication			Lubricated for life														
Direction of rotation			In- and output opposite direction														
Protection class			IP 65														
Shrink disc (Standard version)			SD 024x050 S2														
Max. torque (without axial force)	T_{max}	*Nm*	250														
Mass moment of inertia (relates to the drive) Clamping hub diameter [mm] — C 14	J_1	$kgcm^2$	-	-	-	-	-	0.28	0.27	0.23	0.23	0.2	0.2	0.18	0.18	0.18	0.18
		10^{-3} $in.lb.s^2$	-	-	-	-	-	0.25	0.24	0.2	0.2	0.18	0.18	0.16	0.16	0.16	0.16
E 19	J_1	$kgcm^2$	1.46	1.19	1.06	0.95	0.9	0.73	0.71	0.68	0.67	0.63	0.62	0.63	0.63	0.63	0.63
		10^{-3} $in.lb.s^2$	1.29	1.05	0.94	0.84	0.8	0.65	0.63	0.6	0.59	0.56	0.55	0.56	0.56	0.56	0.56
H 28	J_1	$kgcm^2$	2.88	2.61	2.47	2.37	2.31	-	-	-	-	-	-	-	-	-	-
		10^{-3} $in.lb.s^2$	2.55	2.31	2.19	2.1	2.04	-	-	-	-	-	-	-	-	-	-

Please use our sizing software cymex® for a detailed sizing – **www.wittenstein-cymex.com**
Please contact us for optimum sizing at S1 conditions (Continuous operation).

a) At max. 10 % F_{2QMax}
b) Valid for standard clamping hub diameter
c) Refers to center of the output shaft or flange
d) Please reduce input speed at higher ambient temperatures

View A

Motor shaft diameter [mm]

1-stage

up to 19/28 [4]
(E [6]/H) clamping hub diameter

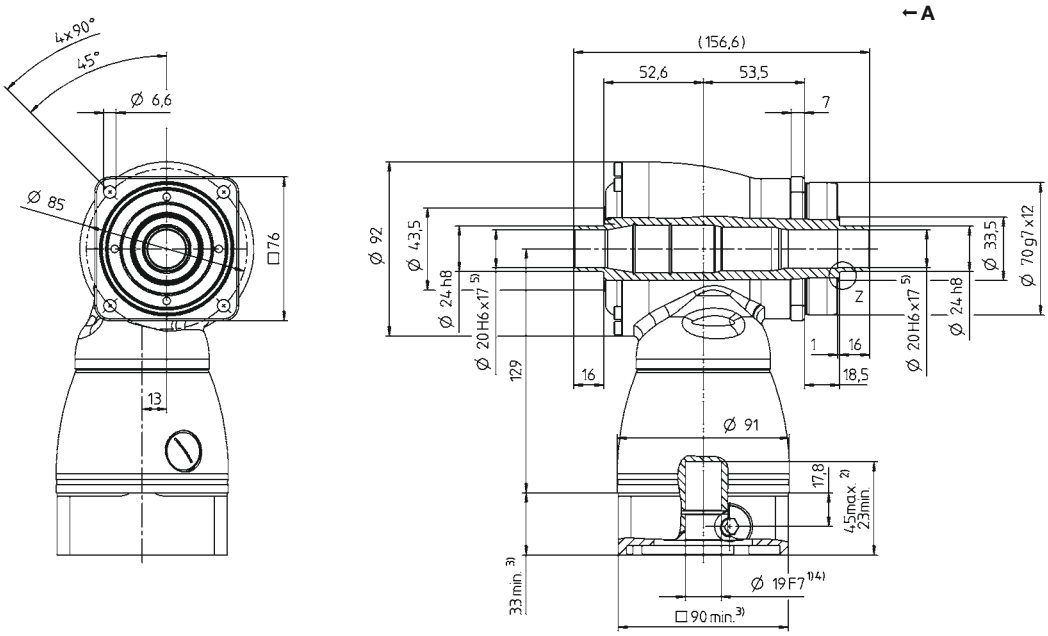

2-stage

up to 14/19 [4]
(C [6]/E) clamping hub diameter

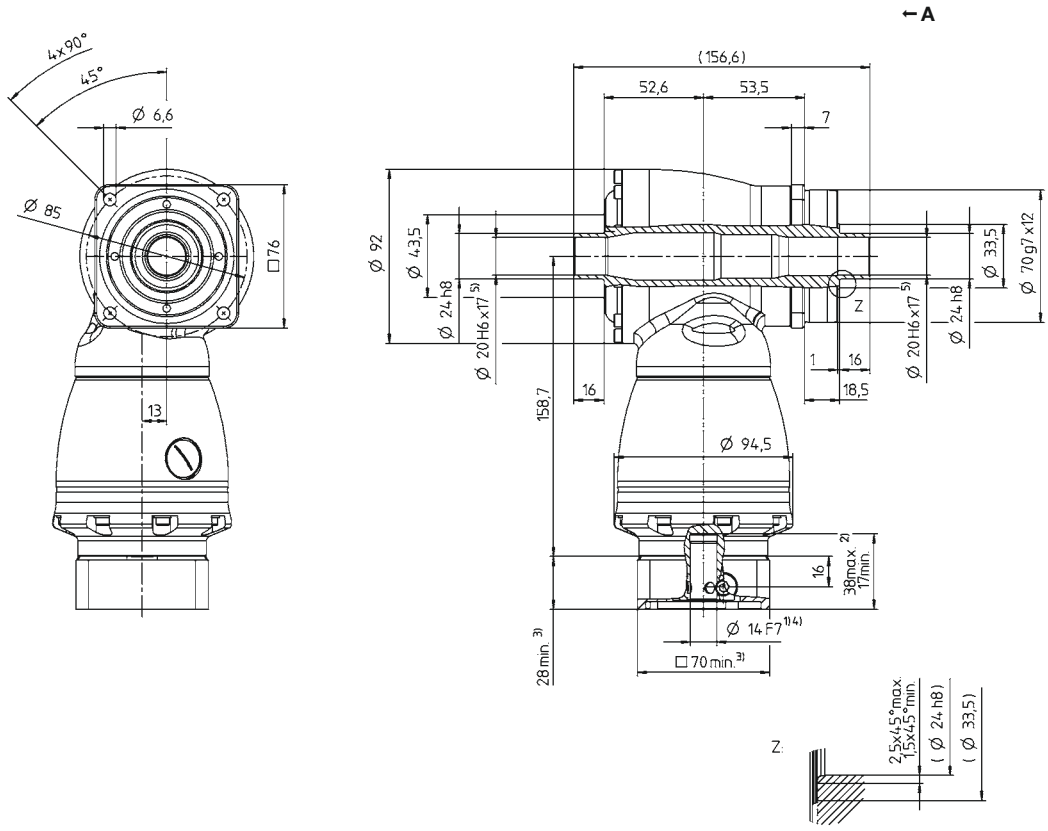

See technical data sheet for available clamping hub diameters (mass moment of inertia). Dimensions available on request.

Non-tolerated dimensions are nominal dimensions
1) Check motor shaft fit
2) Min./Max. permissible motor shaft length. Longer motor shafts are possible, please contact alpha.
3) The dimensions depend on the motor
4) Smaller motor shaft diameter is compensated by a bushing with a minimum thickness of 1 mm
5) Tolerance h6 for mounted shaft.
6) Standard clamping hub diameter

HG+ 100 MF 1-/2-stage

			1-stage					2-stage									
Ratio	i		**3**	**4**	**5**	**7**	**10**	**12**	**16**	**20**	**25**	**28**	**35**	**40**	**50**	**70**	**100**
Max. torque [a) b)]	T_{2a}	Nm	204	204	204	145	125	204	204	204	204	204	204	204	204	145	125
		in.lb	1806	1806	1806	1283	1106	1806	1806	1806	1806	1806	1806	1806	1806	1283	1106
Max. acceleration torque [b)] (max. 1000 cycles per hour)	T_{2B}	Nm	170	170	170	145	125	170	170	170	170	170	170	170	170	145	125
		in.lb	1505	1505	1505	1283	1106	1505	1505	1505	1505	1505	1505	1505	1505	1283	1106
Nominal torque (at n_{1N})	T_{2N}	Nm	100	100	100	90	80	100	100	100	100	100	100	100	100	90	80
		in.lb	885	885	885	797	708	885	885	885	885	885	885	885	885	797	708
Emergency stop torque [a) b)] (permitted 1000 times during the service life of the gearbox)	T_{2Not}	Nm	220	260	260	255	250	260	260	260	260	260	260	260	260	255	250
		in.lb	1947	2301	2301	2257	2213	2301	2301	2301	2301	2301	2301	2301	2301	2257	2213
Permitted average input speed (at T_{2N} and 20 °C ambient temperature) [d)]	n_{1N}	n_{1T}	2200	2400	2700	2500	2500	3100	3100	3100	3100	3100	3100	3100	3500	4200	4200
Max. input speed	n_{1Max}	rpm	5500	5500	5500	5500	5500	4500	4500	4500	4500	4500	4500	4500	4500	4500	4500
Mean no load running torque [b)] (at n_1 = 3000 rpm and 20 °C gearbox temperature)	T_{012}	Nm	4.2	3.3	2.5	3.9	3.1	0.7	0.7	0.6	0.4	0.4	0.3	0.2	0.2	0.2	0.2
		in.lb	37	29	22	35	27	6	6	5	4	4	3	2	2	2	2
Max. backlash	j_t	arcmin	Standard ≤ 4														
Torsional rigidity [b)]	C_{t21}	Nm/arcmin	10.7	12.1	14	14.2	14.4	12.1	12.1	12.1	12.1	12.1	12.1	12.1	14	14.2	14.4
		in.lb/arcmin	95	107	124	126	127	107	107	107	107	107	107	107	124	126	127
Max. axial force [c)]	F_{2AMax}	N	5700														
		lb_f	1283														
Max. lateral force [c)]	F_{2QMax}	N	6300														
		lb_f	1418														
Max. tilting moment	M_{2KMax}	Nm	833														
		in.lb	7373														
Efficiency at full load	η	%	96					94									
Service life	L_h	h	> 20000														
Weight (incl. standard adapter plate)	m	kg	9.3					9.5									
		lb_m	21					21									
Operating noise (at reference ratio and reference speed – ratio-specific values available in cymex®)	L_{PA}	dB(A)	≤ 66														
Max. permitted housing temperature		°C	+90														
		F	194														
Ambient temperature		°C	0 to +40														
		F	32 to 104														
Lubrication			Lubricated for life														
Direction of rotation			In- and output opposite direction														
Protection class			IP 65														
Shrink disc (Standard version)			SD 036x072 S2														
Max. torque (without axial force)	T_{max}	Nm	650														
Mass moment of inertia (relates to the drive) Clamping hub diameter [mm] — E 19	J_1	kgcm²	-	-	-	-	-	1.02	0.97	0.86	0.84	0.75	0.74	0.69	0.69	0.68	0.68
		10^{-3} in.lb.s²	-	-	-	-	-	0.9	0.86	0.76	0.74	0.66	0.65	0.61	0.61	0.6	0.6
G 24	J_1	kgcm²	-	-	-	-	-	2.59	2.54	2.42	2.4	2.31	2.3	2.26	2.25	2.25	2.25
		10^{-3} in.lb.s²	-	-	-	-	-	2.29	2.25	2.14	2.12	2.04	2.04	2	1.99	1.99	1.99
H 28	J_1	kgcm²	4.64	3.8	3.34	2.98	2.79	-	-	-	-	-	-	-	-	-	-
		10^{-3} in.lb.s²	4.11	3.36	2.96	2.64	2.47	-	-	-	-	-	-	-	-	-	-
K 38	J_1	kgcm²	11.9	11	10.6	10.2	10	-	-	-	-	-	-	-	-	-	-
		10^{-3} in.lb.s²	10.53	9.74	9.38	9.03	8.85	-	-	-	-	-	-	-	-	-	-

Please use our sizing software cymex® for a detailed sizing – **www.wittenstein-cymex.com**
Please contact us for optimum sizing at S1 conditions (Continuous operation).

a) At max. 10 % F_{2QMax}
b) Valid for standard clamping hub diameter
c) Refers to center of the output shaft or flange
d) Please reduce input speed at higher ambient temperatures

View A

Motor shaft diameter [mm]

1-stage

up to 28/38 [4]
(H [6]/K) clamping hub diameter

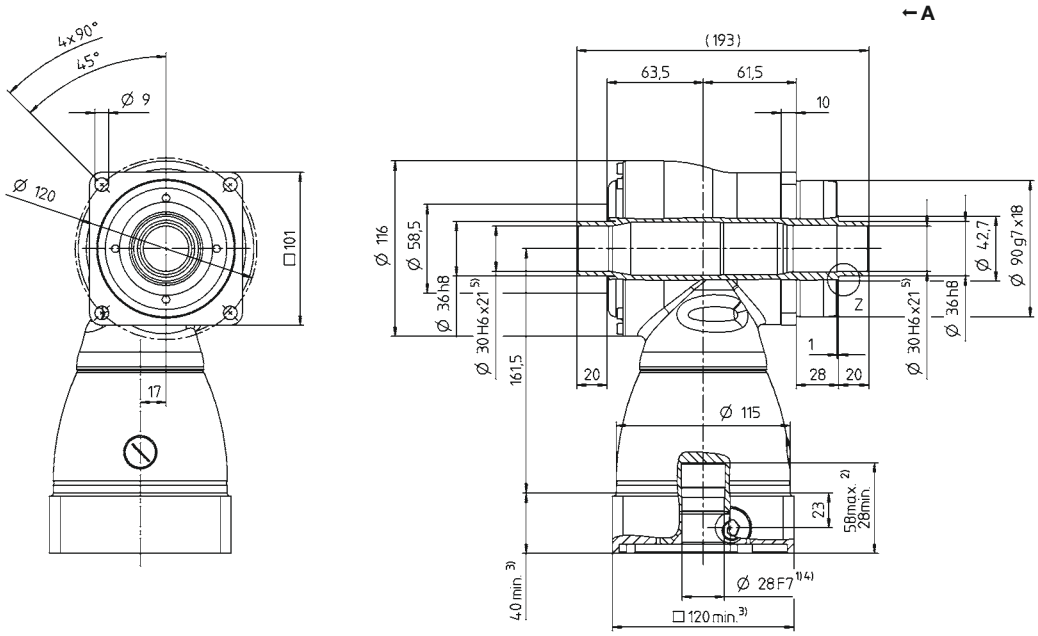

2-stage

up to 19/24 [4]
(E [6]/G) clamping hub diameter

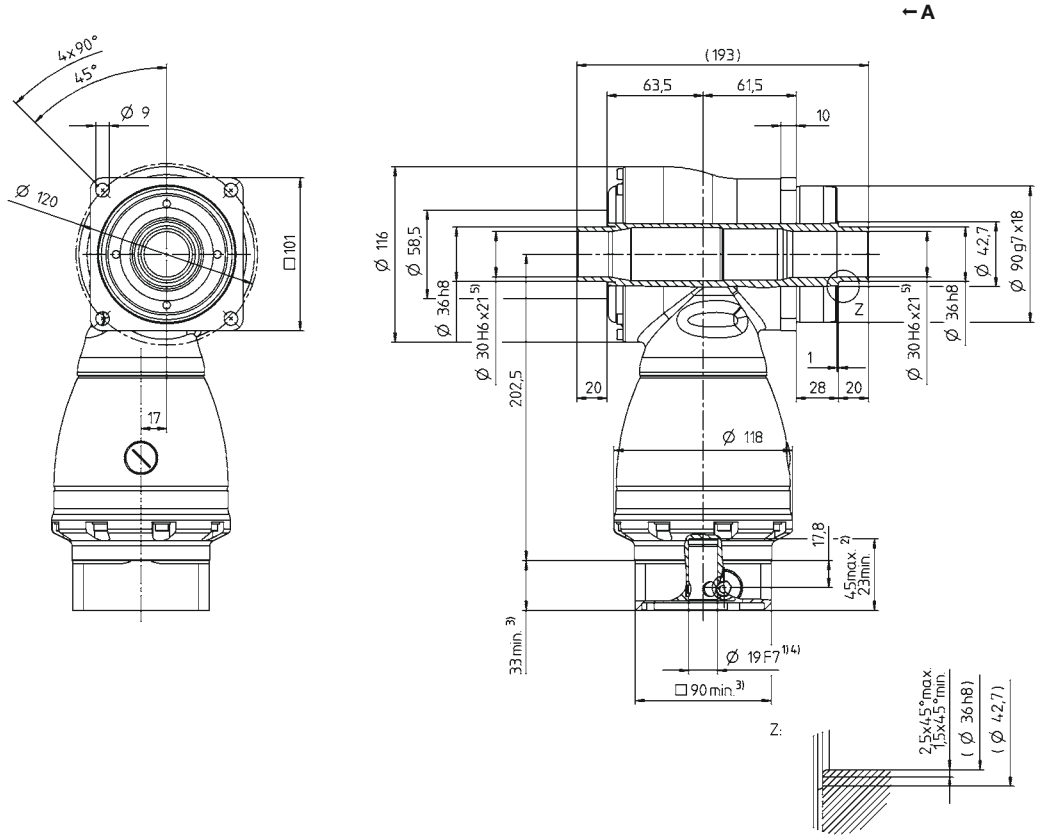

See technical data sheet for available clamping hub diameters (mass moment of inertia). Dimensions available on request.

Non-tolerated dimensions are nominal dimensions
1) Check motor shaft fit
2) Min./Max. permissible motor shaft length. Longer motor shafts are possible, please contact alpha.
3) The dimensions depend on the motor
4) Smaller motor shaft diameter is compensated by a bushing with a minimum thickness of 1 mm
5) Tolerance h6 for mounted shaft.
6) Standard clamping hub diameter

HG+ 140 MF 1-/2-stage

				1-stage					2-stage									
Ratio			*i*	**3**	**4**	**5**	**7**	**10**	**12**	**16**	**20**	**25**	**28**	**35**	**40**	**50**	**70**	**100**
Max. torque [a) b)]			T_{2a}	*Nm*	360	360	360	250	210	360	360	360	360	360	360	360	360	250	210
				in.lb	3186	3186	3186	2213	1859	3186	3186	3186	3186	3186	3186	3186	3186	2213	1859
Max. acceleration torque [b)] (max. 1000 cycles per hour)			T_{2B}	*Nm*	300	300	300	250	210	300	300	300	300	300	300	300	300	250	210
				in.lb	2655	2655	2655	2213	1859	2655	2655	2655	2655	2655	2655	2655	2655	2213	1859
Nominal torque (at n_{1N})			T_{2N}	*Nm*	190	190	190	175	160	190	190	190	190	190	190	190	190	175	160
				in.lb	1682	1682	1682	1549	1416	1682	1682	1682	1682	1682	1682	1682	1682	1549	1416
Emergency stop torque [a) b)] (permitted 1000 times during the service life of the gearbox)			T_{2Not}	*Nm*	400	500	500	450	400	500	500	500	500	500	500	500	500	450	400
				in.lb	3540	4425	4425	3983	3540	4425	4425	4425	4425	4425	4425	4425	4425	3983	3540
Permitted average input speed (at T_{2N} and 20 °C ambient temperature) [d)]			n_{1N}	n_{1T}	1900	2000	2200	2000	2000	2900	2900	2900	2900	2900	2900	2900	3200	3200	3900
Max. input speed			n_{1Max}	*rpm*	5000	5000	5000	5000	5000	4500	4500	4500	4500	4500	4500	4500	4500	4500	4500
Mean no load running torque [b)] (at n_1 = 3000 rpm and 20 °C gearbox temperature)			T_{012}	*Nm*	7.7	5.7	5	8.3	6.1	1.5	1	0.8	0.6	0.6	0.4	0.4	0.3	0.3	0.3
				in.lb	68	50	44	73	54	13	9	7	5	5	4	4	3	3	3
Max. backlash			j_t	*arcmin*	Standard ≤ 4														
Torsional rigidity [b)]			C_{t21}	*Nm/arcmin*	32	36	41	39	38	36	36	36	36	36	36	36	41	39	38
				in.lb/arcmin	283	319	363	345	336	319	319	319	319	319	319	319	363	345	336
Max. axial force [c)]			F_{2AMax}	*N*	9900														
				lb_f	2228														
Max. lateral force [c)]			F_{2QMax}	*N*	9500														
				lb_f	2138														
Max. tilting moment			M_{2KMax}	*Nm*	1692														
				in.lb	14976														
Efficiency at full load			η	%	96					94									
Service life			L_h	*h*	> 20000														
Weight (incl. standard adapter plate)			*m*	*kg*	22.6					24									
				lb_m	50					53									
Operating noise (at reference ratio and reference speed – ratio-specific values available in cymex®)			L_{PA}	*dB(A)*	≤ 68														
Max. permitted housing temperature				*°C*	+90														
				F	194														
Ambient temperature				*°C*	0 to +40														
				F	32 to 104														
Lubrication					Lubricated for life														
Direction of rotation					In- and output opposite direction														
Protection class					IP 65														
Shrink disc (Standard version)					SD 050x090 S2														
Max. torque (without axial force)			T_{max}	*Nm*	1320														
Mass moment of inertia (relates to the drive) Clamping hub diameter [mm]	G	24	J_1	*kgcm²*	-	-	-	-	-	4.2	3.84	3.27	3.16	2.78	2.73	2.48	2.46	2.43	2.42
				10^{-3} *in.lb.s²*	-	-	-	-	-	3.72	3.4	2.89	2.8	2.46	2.42	2.19	2.18	2.15	2.14
	K	38	J_1	*kgcm²*	25	19.1	16.3	14.1	12.8	11.1	10.7	10.2	10.1	9.69	9.64	9.39	9.37	9.34	9.33
				10^{-3} *in.lb.s²*	22.13	16.9	14.43	12.48	11.33	9.82	9.47	9.03	8.94	8.58	8.53	8.31	8.29	8.27	8.26

Please use our sizing software cymex® for a detailed sizing – **www.wittenstein-cymex.com**
Please contact us for optimum sizing at S1 conditions (Continuous operation).

a) At max. 10 % F_{2QMax}
b) Valid for standard clamping hub diameter
c) Refers to center of the output shaft or flange
d) Please reduce input speed at higher ambient temperatures

View A

Motor shaft diameter [mm]

1-stage

up to 38 [4] (K) [6] clamping hub diameter

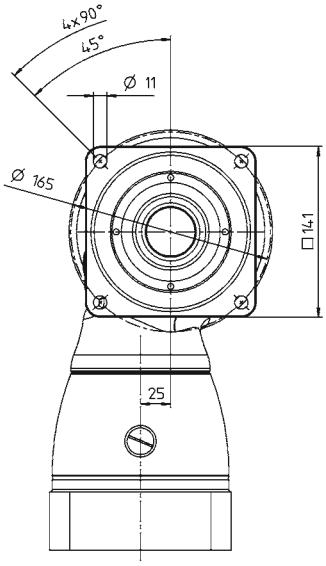

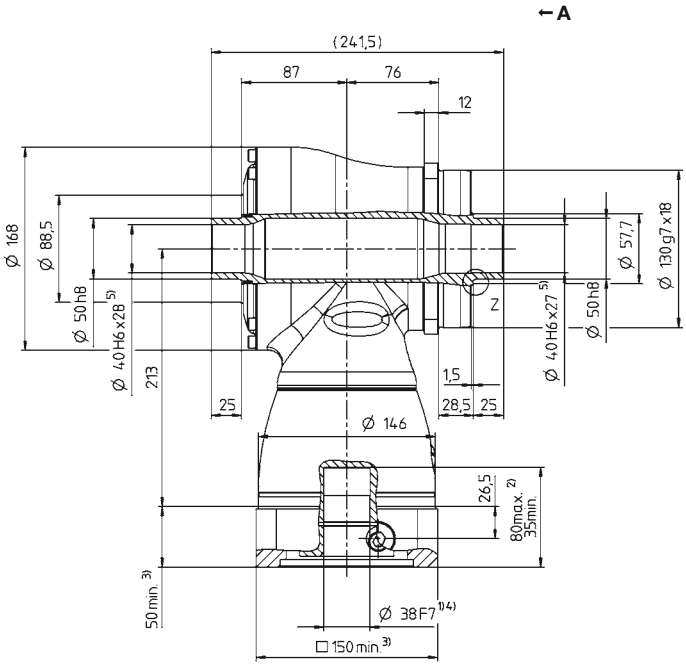

2-stage

up to 24/38 [4] (G/K) [6] clamping hub diameter

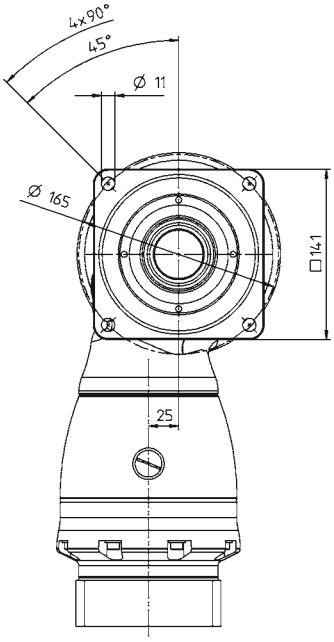

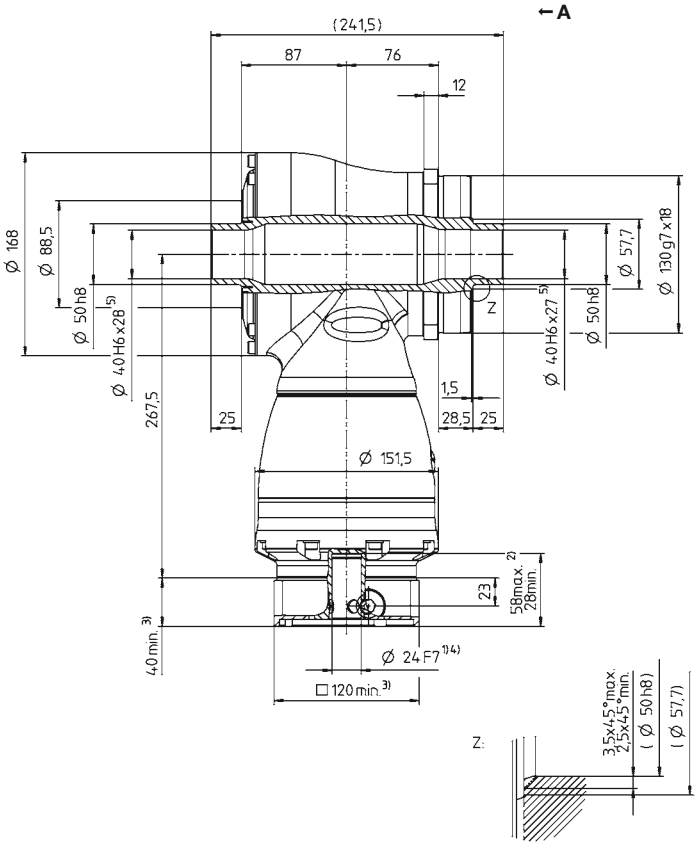

See technical data sheet for available clamping hub diameters (mass moment of inertia). Dimensions available on request.

Non-tolerated dimensions are nominal dimensions

1) Check motor shaft fit
2) Min./Max. permissible motor shaft length. Longer motor shafts are possible, please contact alpha.
3) The dimensions depend on the motor
4) Smaller motor shaft diameter is compensated by a bushing with a minimum thickness of 1 mm
5) Tolerance h6 for mounted shaft.
6) Standard clamping hub diameter

HG+ 180 MF 1-/2-stage

			1-stage					2-stage									
Ratio	*i*		**3**	**4**	**5**	**7**	**10**	**12**	**16**	**20**	**25**	**28**	**35**	**40**	**50**	**70**	**100**
Max. torque [a) b)]	T_{2a}	*Nm*	768	768	768	550	470	768	768	768	768	768	768	768	768	550	470
		in.lb	6797	6797	6797	4868	4160	6797	6797	6797	6797	6797	6797	6797	6797	4868	4160
Max. acceleration torque [b)] (max. 1000 cycles per hour)	T_{2B}	*Nm*	640	640	640	550	470	640	640	640	640	640	640	640	640	550	470
		in.lb	5665	5665	5665	4868	4160	5665	5665	5665	5665	5665	5665	5665	5665	4868	4160
Nominal torque (at n_{1N})	T_{2N}	*Nm*	400	400	400	380	360	400	400	400	400	400	400	400	400	380	360
		in.lb	3540	3540	3540	3363	3186	3540	3540	3540	3540	3540	3540	3540	3540	3363	3186
Emergency stop torque [a) b)] (permitted 1000 times during the service life of the gearbox)	T_{2Not}	*Nm*	900	1050	1050	970	900	1050	1050	1050	1050	1050	1050	1050	1050	970	900
		in.lb	7966	9293	9293	8585	7966	9293	9293	9293	9293	9293	9293	9293	9293	8585	7966
Permitted average input speed (at T_{2N} and 20 °C ambient temperature) [d)]	n_{1N}	n_{1T}	1600	1800	2000	1800	1800	2700	2700	2700	2700	2700	2700	2700	2900	3200	3400
Max. input speed	n_{1Max}	*rpm*	4500	4500	4500	4500	4500	4000	4000	4000	4000	4000	4000	4000	4000	4000	4000
Mean no load running torque [b)] (at n_1 = 3000 rpm and 20 °C gearbox temperature)	T_{012}	*Nm*	16	13	11	16.5	14	3.3	2.5	2	1.8	1.4	1.3	1	1	1	1
		in.lb	142	115	97	146	124	29	22	18	16	12	12	9	9	9	9
Max. backlash	j_t	*arcmin*	Standard ≤ 4														
Torsional rigidity [b)]	C_{t21}	*Nm/arcmin*	71	80	91	89	88	80	80	80	80	80	80	80	91	89	88
		in.lb/arcmin	628	708	805	788	779	708	708	708	708	708	708	708	805	788	779
Max. axial force [c)]	F_{2AMax}	*N*	14200														
		lb_f	3195														
Max. lateral force [c)]	F_{2QMax}	*N*	14700														
		lb_f	3308														
Max. tilting moment	M_{2KMax}	*Nm*	3213														
		in.lb	28438														
Efficiency at full load	η	%	96					94									
Service life	L_h	*h*	> 20000														
Weight (incl. standard adapter plate)	*m*	*kg*	45.4					47									
		lb_m	100					104									
Operating noise (at reference ratio and reference speed – ratio-specific values available in cymex®)	L_{PA}	*dB(A)*	≤ 68														
Max. permitted housing temperature		*°C*	+90														
		F	194														
Ambient temperature		*°C*	0 to +40														
		F	32 to 104														
Lubrication			Lubricated for life														
Direction of rotation			In- and output opposite direction														
Protection class			IP 65														
Shrink disc (Standard version)			SD 068x115 S2														
Max. torque (without axial force)	T_{max}	*Nm*	2450														
Mass moment of inertia (relates to the drive) Clamping hub diameter [mm] — K 38	J_1	$kgcm^2$	-	-	-	-	-	15.3	14	12.3	12	10.9	10.7	10.1	10	9.95	9.91
		10^{-3} $in.lb.s^2$	-	-	-	-	-	13.54	12.39	10.89	10.62	9.65	9.47	8.94	8.85	8.81	8.77
M 48	J_1	$kgcm^2$	73.3	51.6	42.1	34	29.7	30	28.7	27.1	26.7	25.6	25.4	24.8	24.7	24.7	24.6
		10^{-3} $in.lb.s^2$	64.87	45.67	37.26	30.09	26.28	26.55	25.4	23.98	23.63	22.66	22.48	21.95	21.86	21.86	21.77

Please use our sizing software cymex® for a detailed sizing – **www.wittenstein-cymex.com**
Please contact us for optimum sizing at S1 conditions (Continuous operation).

a) At max. 10 % F_{2QMax}
b) Valid for standard clamping hub diameter
c) Refers to center of the output shaft or flange
d) Please reduce input speed at higher ambient temperatures

View A

Motor shaft diameter [mm]

1-stage

up to 48 [4] (M) [6] clamping hub diameter

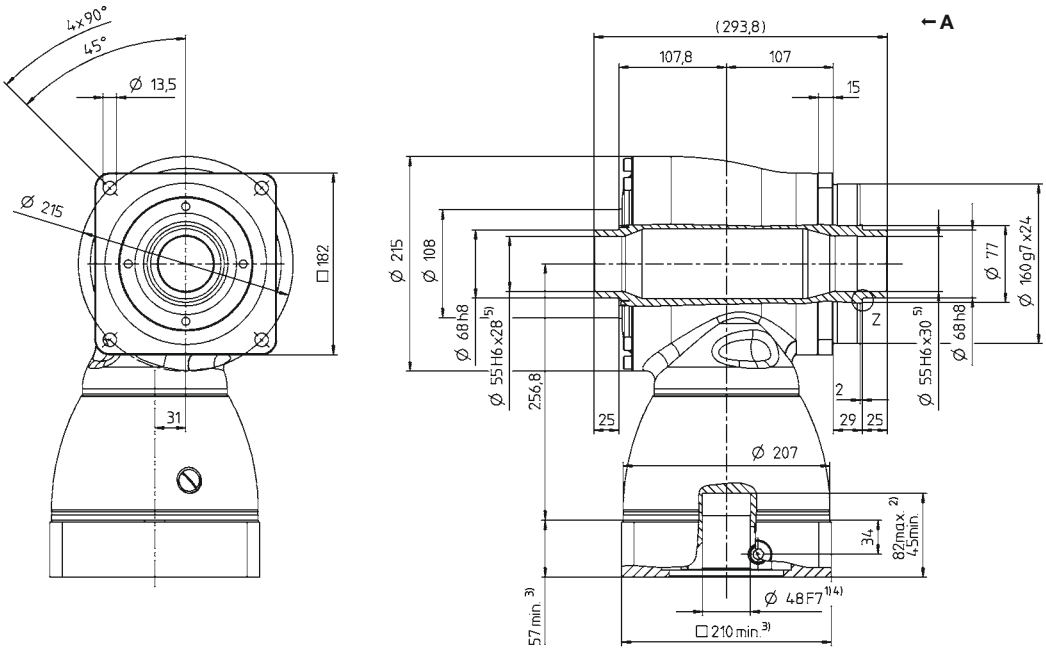

2-stage

up to 38/48 [4] (K [6]/M) clamping hub diameter

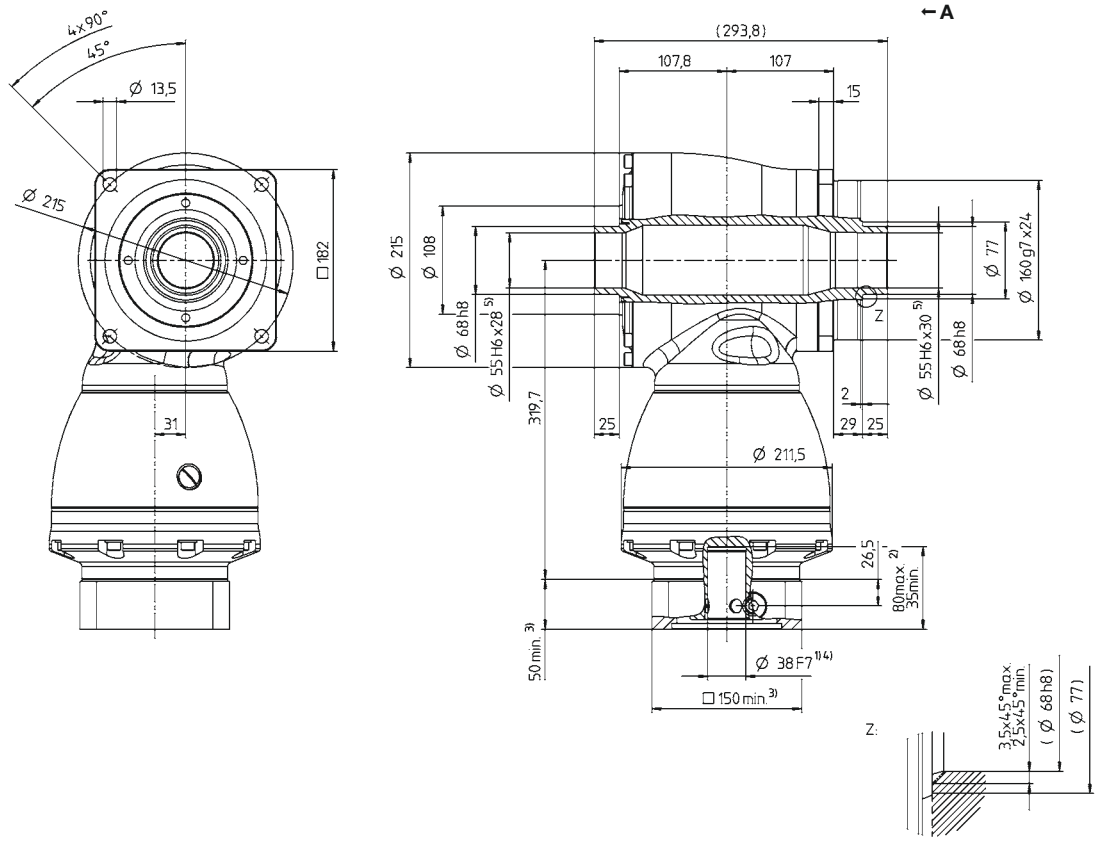

See technical data sheet for available clamping hub diameters (mass moment of inertia). Dimensions available on request.

Non-tolerated dimensions are nominal dimensions

1) Check motor shaft fit
2) Min. / Max. permissible motor shaft length. Longer motor shafts are possible, please contact alpha.
3) The dimensions depend on the motor
4) Smaller motor shaft diameter is compensated by a bushing with a minimum thickness of 1 mm
5) Tolerance h6 for mounted shaft.
6) Standard clamping hub diameter

SK⁺ / SPK⁺ – Space-saving right-angle precision with output shaft

SK⁺

The versatile hypoid gearbox with SP⁺ compatible output shaft. SPK⁺ gearboxes with planetary stage are especially suitable for high-precision applications requiring higher power and outstanding torsional rigidity.

Product highlights

Max. torsional backlash
SK⁺ ≤ 4 arcmin (Standard)
SPK⁺ ≤ 4 arcmin (Standard)
≤ 2 arcmin (Reduced)

Diverse range of ratios i = 3 – 10,000

Flexibility thanks to various output types

Other gearbox models
Corrosional resistant design, ATEX (SK⁺)

The SK⁺ / SPK⁺ compared to the industry standard

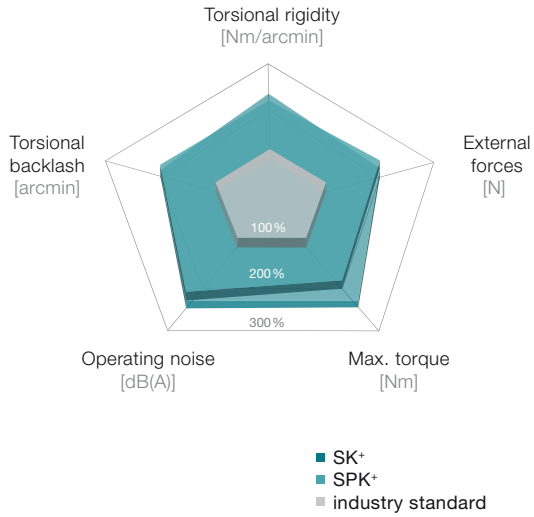

SPK⁺ in corrosion-resistant design

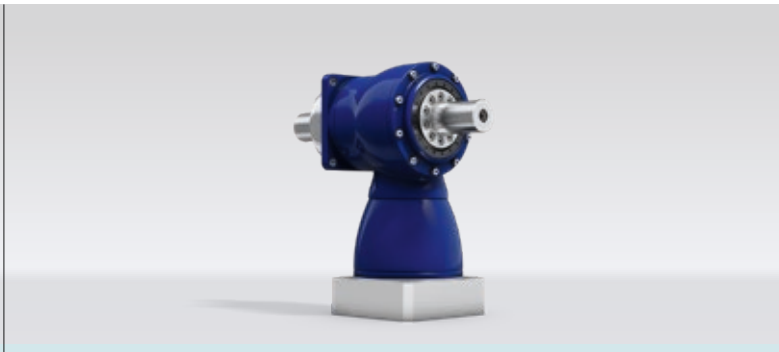

SK⁺ with rearward shaft

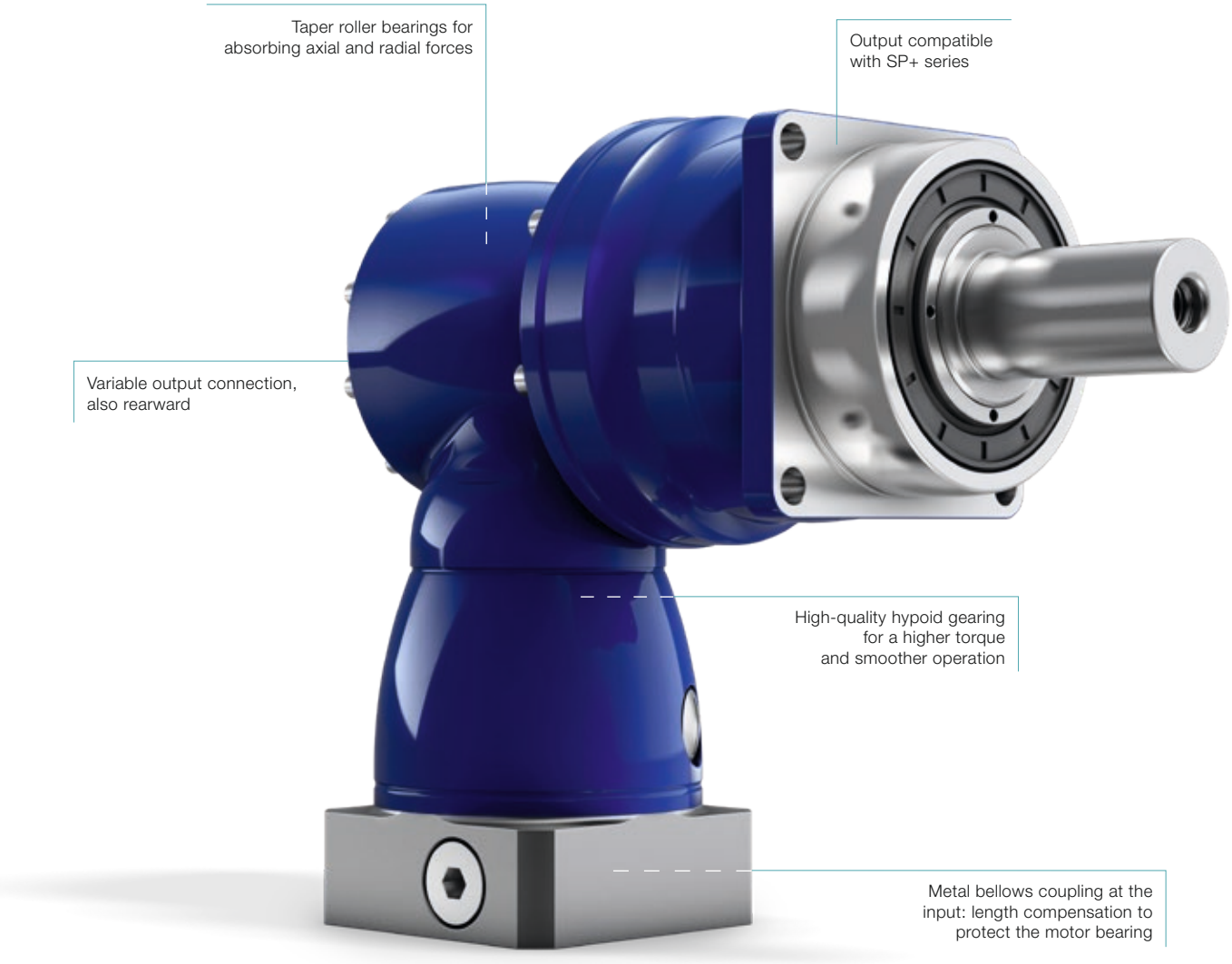

SPK+

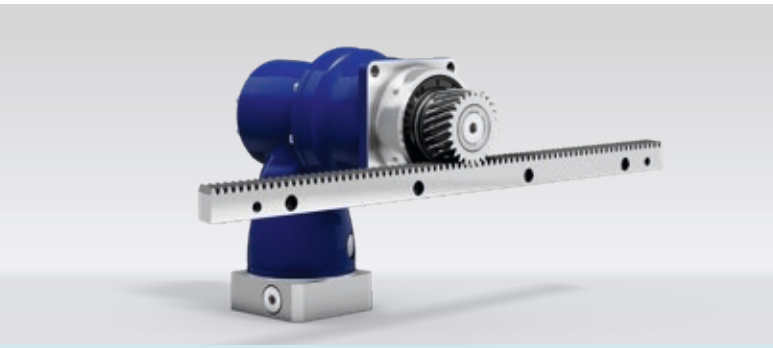

SPK+ with rack and pinion

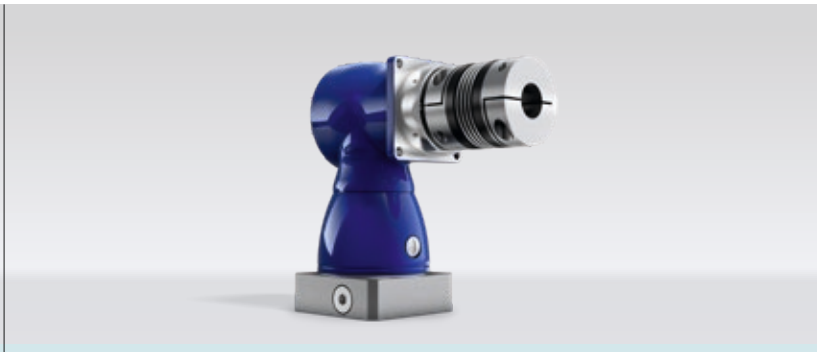

SK+ with metal bellows coupling

SK+ 060 MF 1-/2-stage

			1-stage					2-stage									
Ratio	*i*		**3**	**4**	**5**	**7**	**10**	**12**	**16**	**20**	**25**	**28**	**35**	**40**	**50**	**70**	**100**
Max. torque [a) b) e)]	T_{2a}	*Nm*	36	36	36	25	20	36	36	36	36	36	36	36	36	25	20
		in.lb	319	319	319	221	177	319	319	319	319	319	319	319	319	221	177
Max. acceleration torque [b) e)] (max. 1000 cycles per hour)	T_{2B}	*Nm*	30	30	30	25	20	30	30	30	30	30	30	30	30	25	20
		in.lb	266	266	266	221	177	266	266	266	266	266	266	266	266	221	177
Nominal torque (at n_{1N})	T_{2N}	*Nm*	22	22	22	20	15	22	22	22	22	22	22	22	22	20	15
		in.lb	195	195	195	177	133	195	195	195	195	195	195	195	195	177	133
Emergency stop torque [a) b) e)] (permitted 1000 times during the service life of the gearbox)	T_{2Not}	*Nm*	40	50	50	45	40	50	50	50	50	50	50	50	50	45	40
		in.lb	354	443	443	398	354	443	443	443	443	443	443	443	443	398	354
Permitted average input speed (at T_{2N} and 20 °C ambient temperature) [d)]	n_{1N}	n_{1T}	2500	2700	3000	3000	3000	4400	4400	4400	4400	4400	4400	4400	4800	5500	5500
Max. input speed	n_{1Max}	*rpm*	7500	7500	7500	7500	7500	6000	6000	6000	6000	6000	6000	6000	6000	6000	6000
Mean no load running torque [b)] (at n_1 = 3000 rpm and 20 °C gearbox temperature)	T_{012}	*Nm*	1.2	1.1	1	1.2	1.1	0.2	0.2	0.2	0.2	0.2	0.2	0.1	0.1	0.1	0.1
		in.lb	11	10	9	11	10	2	2	2	2	2	2	1	1	1	1
Max. backlash	j_t	*arcmin*	Standard ≤ 5														
Torsional rigidity [b)]	C_{t21}	*Nm/arcmin*	2	2.1	2.2	2	1.8	2.1	2.1	2.1	2.1	2.1	2.1	2.1	2.2	2	1.8
		in.lb/arcmin	18	19	19	18	16	19	19	19	19	19	19	19	19	18	16
Max. axial force [c)]	F_{2AMax}	*N*	2400														
		lb_f	540														
Max. lateral force [c)]	F_{2QMax}	*N*	2700														
		lb_f	608														
Max. tilting moment	M_{2KMax}	*Nm*	251														
		in.lb	2222														
Efficiency at full load	η	%	96					94									
Service life	L_h	*h*	> 20000														
Weight (incl. standard adapter plate)	*m*	*kg*	2.9					3.2									
		lb_m	6					7									
Operating noise (at reference ratio and reference speed – ratio-specific values available in cymex®)	L_{PA}	*dB(A)*	≤ 64														
Max. permitted housing temperature		*°C*	+90														
		F	194														
Ambient temperature		*°C*	0 to +40														
		F	32 to 104														
Lubrication			Lubricated for life														
Direction of rotation			In- and output opposite direction														
Protection class			IP 65														
Metal bellows coupling (recommended product type – validate sizing with cymex®)			BC2 - 00030AA - 016.000 - X														
Bore diameter of coupling on the application side		*mm*	X = 010.000 - 030.000														
Mass moment of inertia (relates to the drive) Clamping hub diameter [mm] — B 11	J_1	*kgcm²*	-	-	-	-	-	0.09	0.09	0.07	0.07	0.06	0.06	0.06	0.06	0.06	0.06
		10⁻³ in.lb.s²	-	-	-	-	-	0.08	0.08	0.06	0.06	0.05	0.05	0.05	0.05	0.05	0.05
C 14	J_1	*kgcm²*	0.52	0.44	0.4	0.36	0.34	0.2	0.2	0.19	0.19	0.18	0.18	0.17	0.17	0.17	0.17
		10⁻³ in.lb.s²	0.46	0.39	0.35	0.32	0.3	0.18	0.18	0.17	0.17	0.16	0.16	0.15	0.15	0.15	0.15
E 19	J_1	*kgcm²*	0.87	0.79	0.75	0.71	0.7	-	-	-	-	-	-	-	-	-	-
		10⁻³ in.lb.s²	0.77	0.7	0.66	0.63	0.62	-	-	-	-	-	-	-	-	-	-

Please use our sizing software cymex® for a detailed sizing – **www.wittenstein-cymex.com**
Please contact us for optimum sizing at S1 conditions (Continuous operation).

a) At max. 10 % F_{2QMax}
b) Valid for standard clamping hub diameter
c) Refers to center of the output shaft or flange
d) Please reduce input speed at higher ambient temperatures
e) Smooth shaft

View A

Motor shaft diameter [mm]

1-stage

up to 14/19 [4] (C [5]/E) clamping hub diameter

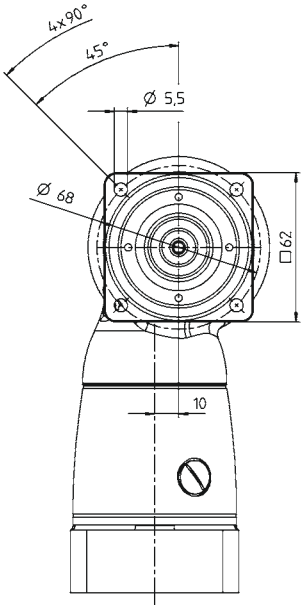

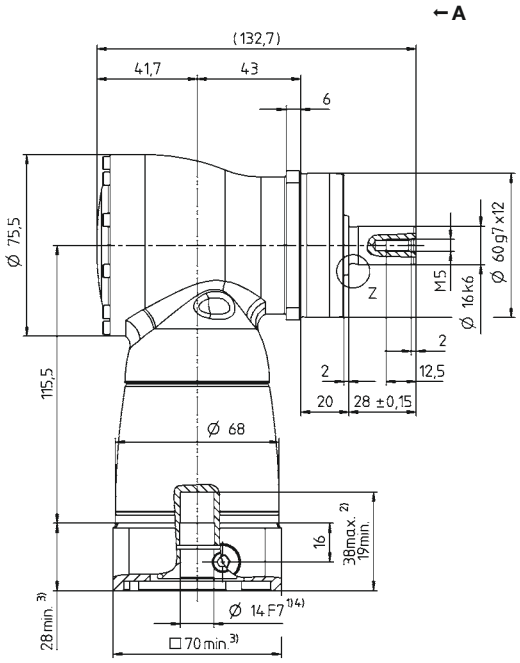

2-stage

up to 11/14 [4] (B [5]/C) clamping hub diameter

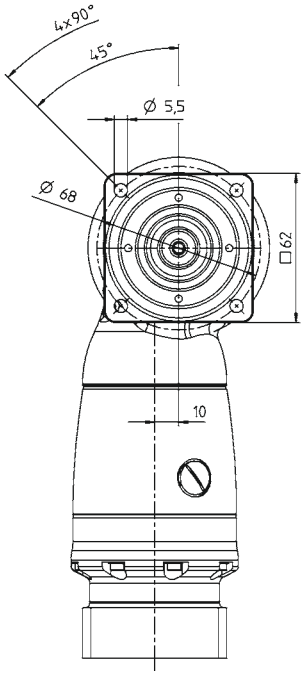

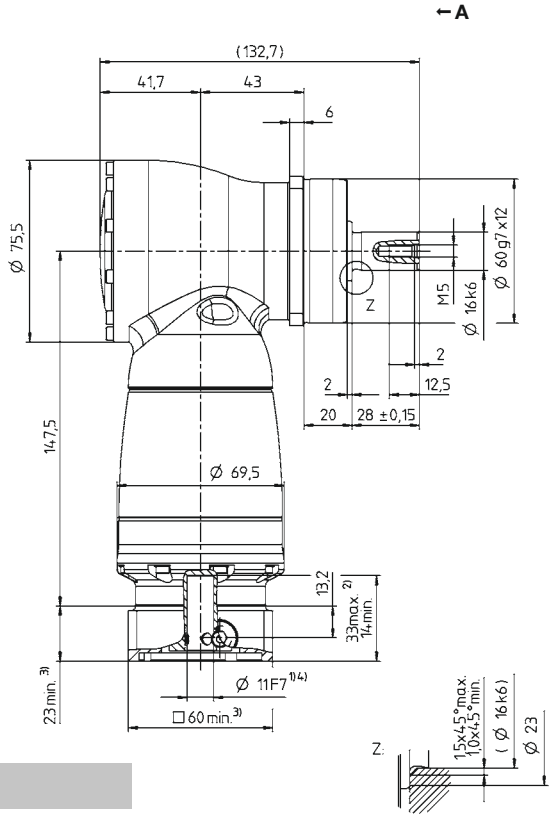

Other output variants

Shaft with key

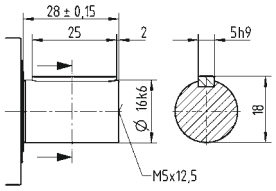

Splined shaft (DIN 5480)

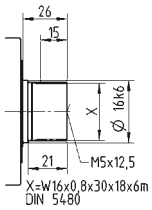

See technical data sheet for available clamping hub diameters (mass moment of inertia). Dimensions available on request.

Non-tolerated dimensions are nominal dimensions
[1] Check motor shaft fit
[2] Min. / Max. permissible motor shaft length. Longer motor shafts are possible, please contact alpha.
[3] The dimensions depend on the motor
[4] Smaller motor shaft diameter is compensated by a bushing with a minimum thickness of 1 mm
[5] Standard clamping hub diameter

			1-stage					2-stage									
Ratio	*i*		**3**	**4**	**5**	**7**	**10**	**12**	**16**	**20**	**25**	**28**	**35**	**40**	**50**	**70**	**100**
Max. torque [a) b) e)]	T_{2a}	*Nm*	84	84	84	60	50	84	84	84	84	84	84	84	84	60	50
		in.lb	743	743	743	531	443	743	743	743	743	743	743	743	743	531	443
Max. acceleration torque [b) e)] (max. 1000 cycles per hour)	T_{2B}	*Nm*	70	70	70	60	50	70	70	70	70	70	70	70	70	60	50
		in.lb	620	620	620	531	443	620	620	620	620	620	620	620	620	531	443
Nominal torque (at n_{1N})	T_{2N}	*Nm*	50	50	50	45	40	50	50	50	50	50	50	50	50	45	40
		in.lb	443	443	443	398	354	443	443	443	443	443	443	443	443	398	354
Emergency stop torque [a) b) e)] (permitted 1000 times during the service life of the gearbox)	T_{2Not}	*Nm*	95	115	115	110	100	115	115	115	115	115	115	115	115	110	100
		in.lb	841	1018	1018	974	885	1018	1018	1018	1018	1018	1018	1018	1018	974	885
Permitted average input speed (at T_{2N} and 20 °C ambient temperature) [d)]	n_{1N}	n_{1T}	2300	2500	2800	2800	2800	3500	3500	3500	3500	3500	3500	3500	3800	4500	4500
Max. input speed	n_{1Max}	*rpm*	7500	7500	7500	7500	7500	6000	6000	6000	6000	6000	6000	6000	6000	6000	6000
Mean no load running torque [b)] (at n_1 = 3000 rpm and 20 °C gearbox temperature)	T_{012}	*Nm*	2	1.7	1.5	2	1.8	0.3	0.3	0.2	0.2	0.2	0.2	0.1	0.1	0.1	0.1
		in.lb	18	15	13	18	16	3	3	2	2	2	2	1	1	1	1
Max. backlash	j_t	*arcmin*	Standard ≤ 4														
Torsional rigidity [b)]	C_{t21}	*Nm/arcmin*	5	5.5	6	6	6	5.5	5.5	5.5	5.5	5.5	5.5	5.5	6	6	6
		in.lb/arcmin	44	49	53	53	53	49	49	49	49	49	49	49	53	53	53
Max. axial force [c)]	F_{2AMax}	*N*	3400														
		lb_f	765														
Max. lateral force [c)]	F_{2QMax}	*N*	4000														
		lb_f	900														
Max. tilting moment	M_{2KMax}	*Nm*	437														
		in.lb	3868														
Efficiency at full load	η	%	96					94									
Service life	L_h	*h*	> 20000														
Weight (incl. standard adapter plate)	*m*	*kg*	4.8					5.4									
		lb_m	11					12									
Operating noise (at reference ratio and reference speed – ratio-specific values available in cymex®)	L_{PA}	*dB(A)*	≤ 66														
Max. permitted housing temperature		*°C*	+90														
		F	194														
Ambient temperature		*°C*	0 to +40														
		F	32 to 104														
Lubrication			Lubricated for life														
Direction of rotation			In- and output opposite direction														
Protection class			IP 65														
Metal bellows coupling (recommended product type – validate sizing with cymex®)			BC2 - 00080AA - 022.000 - X														
Bore diameter of coupling on the application side		*mm*	X = 014.000 - 042.000														
Mass moment of inertia (relates to the drive) Clamping hub diameter [mm] — C 14	J_1	$kgcm^2$	-	-	-	-	-	0.28	0.27	0.23	0.23	0.2	0.2	0.18	0.18	0.18	0.18
		10^{-3} $in.lb.s^2$	-	-	-	-	-	0.25	0.24	0.2	0.2	0.18	0.18	0.16	0.16	0.16	0.16
E 19	J_1	$kgcm^2$	1.46	1.19	1.06	0.95	0.9	0.73	0.71	0.68	0.67	0.63	0.62	0.63	0.63	0.63	0.63
		10^{-3} $in.lb.s^2$	1.29	1.05	0.94	0.84	0.8	0.65	0.63	0.6	0.59	0.56	0.55	0.56	0.56	0.56	0.56
H 28	J_1	$kgcm^2$	2.88	2.61	2.47	2.37	2.31	-	-	-	-	-	-	-	-	-	-
		10^{-3} $in.lb.s^2$	2.55	2.31	2.19	2.1	2.04	-	-	-	-	-	-	-	-	-	-

Please use our sizing software cymex® for a detailed sizing – **www.wittenstein-cymex.com**
Please contact us for optimum sizing at S1 conditions (Continuous operation).

a) At max. 10 % F_{2QMax}
b) Valid for standard clamping hub diameter
c) Refers to center of the output shaft or flange
d) Please reduce input speed at higher ambient temperatures
e) Smooth shaft

Motor shaft diameter [mm]

1-stage

up to 19/28 [4] (E[5]/H) clamping hub diameter

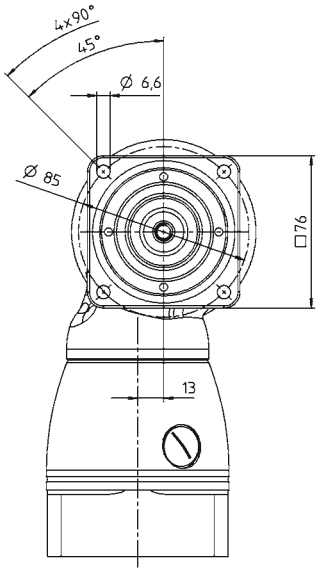

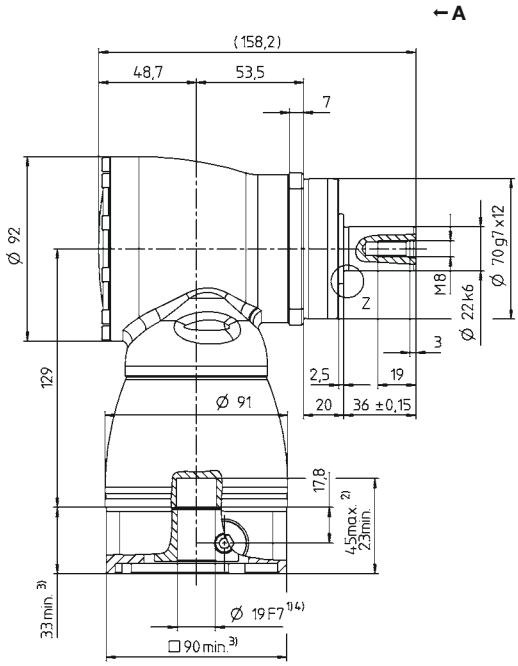

2-stage

up to 14/19 [4] (C[5]/E) clamping hub diameter

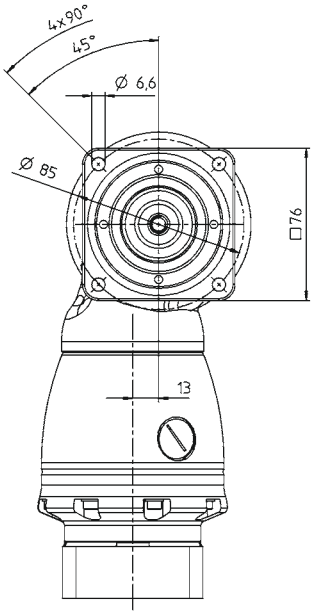

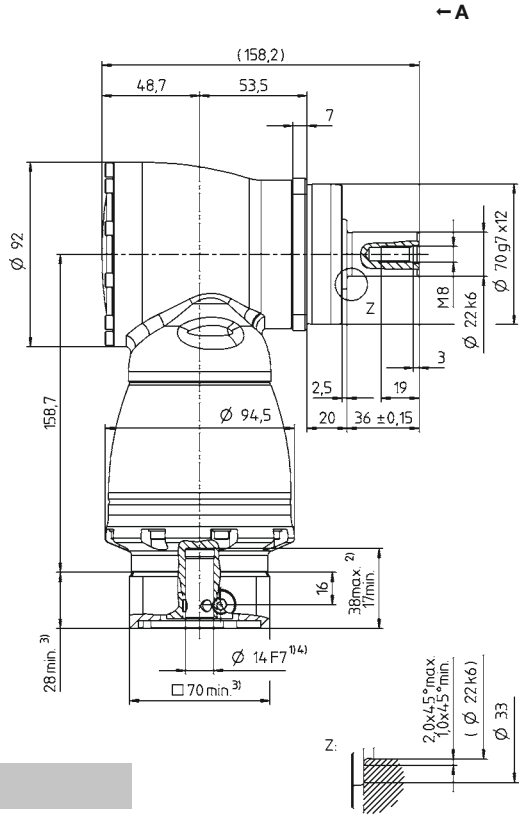

Other output variants

Shaft with key

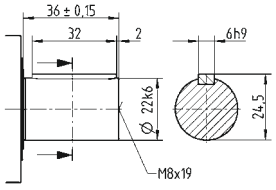

Splined shaft (DIN 5480)

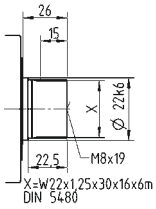

See technical data sheet for available clamping hub diameters (mass moment of inertia). Dimensions available on request.

Non-tolerated dimensions are nominal dimensions
1) Check motor shaft fit
2) Min. / Max. permissible motor shaft length. Longer motor shafts are possible, please contact alpha.
3) The dimensions depend on the motor
4) Smaller motor shaft diameter is compensated by a bushing with a minimum thickness of 1 mm
5) Standard clamping hub diameter

SK+ 100 MF 1-/2-stage

			1-stage					2-stage									
Ratio	*i*		**3**	**4**	**5**	**7**	**10**	**12**	**16**	**20**	**25**	**28**	**35**	**40**	**50**	**70**	**100**
Max. torque [a) b) e)]	T_{2a}	*Nm*	204	204	204	145	125	204	204	204	204	204	204	204	204	145	125
		in.lb	1806	1806	1806	1283	1106	1806	1806	1806	1806	1806	1806	1806	1806	1283	1106
Max. acceleration torque [b) e)] (max. 1000 cycles per hour)	T_{2B}	*Nm*	170	170	170	145	125	170	170	170	170	170	170	170	170	145	125
		in.lb	1505	1505	1505	1283	1106	1505	1505	1505	1505	1505	1505	1505	1505	1283	1106
Nominal torque (at n_{1N})	T_{2N}	*Nm*	100	100	100	90	80	100	100	100	100	100	100	100	100	90	80
		in.lb	885	885	885	797	708	885	885	885	885	885	885	885	885	797	708
Emergency stop torque [a) b) e)] (permitted 1000 times during the service life of the gearbox)	T_{2Not}	*Nm*	220	260	260	255	250	260	260	260	260	260	260	260	260	255	250
		in.lb	1947	2301	2301	2257	2213	2301	2301	2301	2301	2301	2301	2301	2301	2257	2213
Permitted average input speed (at T_{2N} and 20 °C ambient temperature) [d)]	n_{1N}	n_{1T}	2200	2400	2700	2500	2500	3100	3100	3100	3100	3100	3100	3100	3500	4200	4200
Max. input speed	n_{1Max}	*rpm*	5500	5500	5500	5500	5500	4500	4500	4500	4500	4500	4500	4500	4500	4500	4500
Mean no load running torque [b)] (at n_1 = 3000 rpm and 20 °C gearbox temperature)	T_{012}	*Nm*	3.8	3	2.3	3.5	2.8	0.6	0.6	0.5	0.4	0.4	0.3	0.2	0.2	0.2	0.2
		in.lb	34	27	20	31	25	5	5	4	4	4	3	2	2	2	2
Max. backlash	j_t	*arcmin*	Standard ≤ 4														
Torsional rigidity [b)]	C_{t21}	*Nm/arcmin*	10	11	13	13	13	11	11	11	11	11	11	11	13	13	13
		in.lb/arcmin	89	97	115	115	115	97	97	97	97	97	97	97	115	115	115
Max. axial force [c)]	F_{2AMax}	*N*	5700														
		lb_f	1283														
Max. lateral force [c)]	F_{2QMax}	*N*	6300														
		lb_f	1418														
Max. tilting moment	M_{2KMax}	*Nm*	833														
		in.lb	7373														
Efficiency at full load	η	%	96					94									
Service life	L_h	*h*	> 20000														
Weight (incl. standard adapter plate)	*m*	*kg*	9.3					10									
		lb_m	21					22									
Operating noise (at reference ratio and reference speed – ratio-specific values available in cymex®)	L_{PA}	*dB(A)*	≤ 66														
Max. permitted housing temperature		*°C*	+90														
		F	194														
Ambient temperature		*°C*	0 to +40														
		F	32 to 104														
Lubrication			Lubricated for life														
Direction of rotation			In- and output opposite direction														
Protection class			IP 65														
Metal bellows coupling (recommended product type – validate sizing with cymex®)			BC2 - 00200AA - 032.000 - X														
Bore diameter of coupling on the application side		*mm*	X = 022.000 - 045.000														
Mass moment of inertia (relates to the drive) Clamping hub diameter [mm] — E 19	J_1	$kgcm^2$	-	-	-	-	-	1.02	0.97	0.86	0.84	0.75	0.74	0.69	0.69	0.68	0.68
		10^{-3} $in.lb.s^2$	-	-	-	-	-	0.9	0.86	0.76	0.74	0.66	0.65	0.61	0.61	0.6	0.6
G 24	J_1	$kgcm^2$	-	-	-	-	-	2.59	2.54	2.42	2.4	2.31	2.3	2.26	2.25	2.25	2.25
		10^{-3} $in.lb.s^2$	-	-	-	-	-	2.29	2.25	2.14	2.12	2.04	2.04	2	1.99	1.99	1.99
H 28	J_1	$kgcm^2$	4.64	3.8	3.34	2.98	2.79	-	-	-	-	-	-	-	-	-	-
		10^{-3} $in.lb.s^2$	4.11	3.36	2.96	2.64	2.47	-	-	-	-	-	-	-	-	-	-
K 38	J_1	$kgcm^2$	11.9	11	10.6	10.2	10	-	-	-	-	-	-	-	-	-	-
		10^{-3} $in.lb.s^2$	10.53	9.74	9.38	9.03	8.85	-	-	-	-	-	-	-	-	-	-

Please use our sizing software cymex® for a detailed sizing – **www.wittenstein-cymex.com**
Please contact us for optimum sizing at S1 conditions (Continuous operation).

[a)] At max. 10 % F_{2QMax}
[b)] Valid for standard clamping hub diameter
[c)] Refers to center of the output shaft or flange
[d)] Please reduce input speed at higher ambient temperatures
[e)] Smooth shaft

View A

Motor shaft diameter [mm]

1-stage

up to 28/38 [4] (H[5]/K) clamping hub diameter

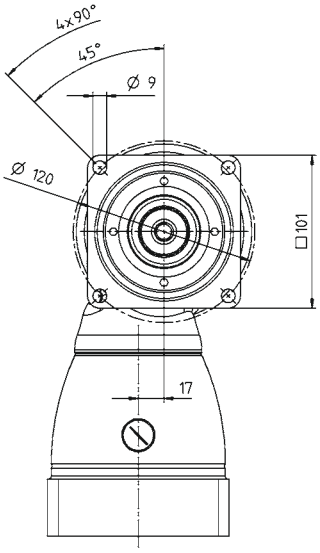

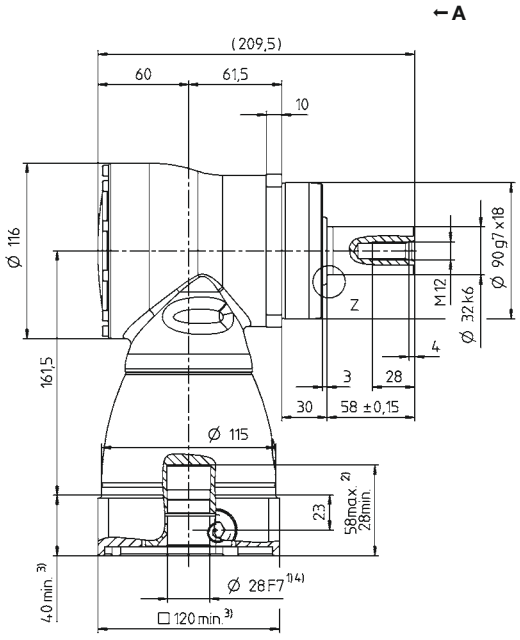

2-stage

up to 19/24 [4] (E[5]/G) clamping hub diameter

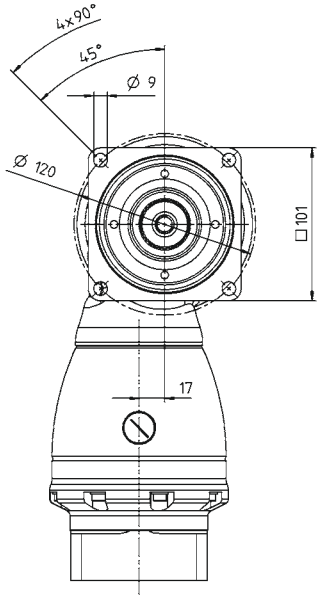

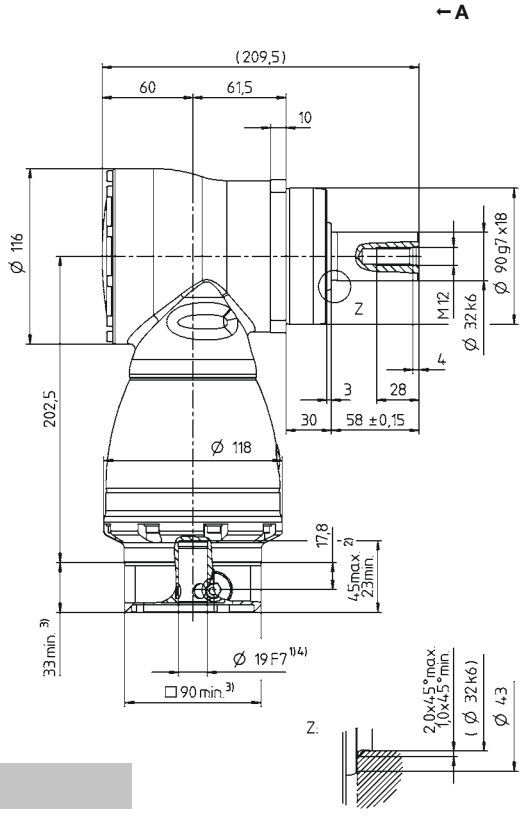

Other output variants

Shaft with key

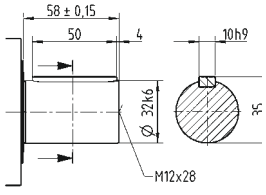

Splined shaft (DIN 5480)

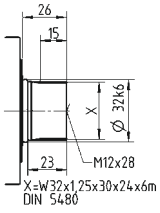

See technical data sheet for available clamping hub diameters (mass moment of inertia). Dimensions available on request.

Non-tolerated dimensions are nominal dimensions
1) Check motor shaft fit
2) Min./Max. permissible motor shaft length. Longer motor shafts are possible, please contact alpha.
3) The dimensions depend on the motor
4) Smaller motor shaft diameter is compensated by a bushing with a minimum thickness of 1 mm
5) Standard clamping hub diameter

SK+ 140 MF 1-/2-stage

			1-stage					2-stage									
Ratio	*i*		**3**	**4**	**5**	**7**	**10**	**12**	**16**	**20**	**25**	**28**	**35**	**40**	**50**	**70**	**100**
Max. torque [a) b) e)]	T_{2a}	*Nm*	360	360	360	250	210	360	360	360	360	360	360	360	360	250	210
		in.lb	3186	3186	3186	2213	1859	3186	3186	3186	3186	3186	3186	3186	3186	2213	1859
Max. acceleration torque [b) e)] (max. 1000 cycles per hour)	T_{2B}	*Nm*	300	300	300	250	210	300	300	300	300	300	300	300	300	250	210
		in.lb	2655	2655	2655	2213	1859	2655	2655	2655	2655	2655	2655	2655	2655	2213	1859
Nominal torque (at n_{1N})	T_{2N}	*Nm*	190	190	190	175	160	190	190	190	190	190	190	190	190	175	160
		in.lb	1682	1682	1682	1549	1416	1682	1682	1682	1682	1682	1682	1682	1682	1549	1416
Emergency stop torque [a) b) e)] (permitted 1000 times during the service life of the gearbox)	T_{2Not}	*Nm*	400	500	500	450	400	500	500	500	500	500	500	500	500	450	400
		in.lb	3540	4425	4425	3983	3540	4425	4425	4425	4425	4425	4425	4425	4425	3983	3540
Permitted average input speed (at T_{2N} and 20 °C ambient temperature) [d)]	n_{1N}	n_{1T}	1900	2000	2200	2000	2000	2900	2900	2900	2900	2900	2900	2900	3200	3200	3900
Max. input speed	n_{1Max}	*rpm*	5000	5000	5000	5000	5000	4500	4500	4500	4500	4500	4500	4500	4500	4500	4500
Mean no load running torque [b)] (at n_1 = 3000 rpm and 20 °C gearbox temperature)	T_{012}	*Nm*	7	5.2	4.5	7.5	5.5	1.4	0.9	0.7	0.5	0.5	0.4	0.4	0.3	0.3	0.3
		in.lb	62	46	40	66	49	12	8	6	4	4	4	4	3	3	3
Max. backlash	j_t	*arcmin*	Standard ≤ 4														
Torsional rigidity [b)]	C_{t21}	*Nm/arcmin*	27	30	32	32	32	29	29	29	29	29	29	29	31	31	31
		in.lb/arcmin	239	266	283	283	283	257	257	257	257	257	257	257	274	274	274
Max. axial force [c)]	F_{2AMax}	*N*	9900														
		lb_f	2228														
Max. lateral force [c)]	F_{2QMax}	*N*	9500														
		lb_f	2138														
Max. tilting moment	M_{2KMax}	*Nm*	1692														
		in.lb	14976														
Efficiency at full load	η	%	96					94									
Service life	L_h	*h*	> 20000														
Weight (incl. standard adapter plate)	*m*	*kg*	22.6					25									
		lb_m	50					55									
Operating noise (at reference ratio and reference speed – ratio-specific values available in cymex®)	L_{PA}	*dB(A)*	≤ 68														
Max. permitted housing temperature		*°C*	+90														
		F	194														
Ambient temperature		*°C*	0 to +40														
		F	32 to 104														
Lubrication			Lubricated for life														
Direction of rotation			In- and output opposite direction														
Protection class			IP 65														
Metal bellows coupling (recommended product type – validate sizing with cymex®)			BC2 - 00300AA - 040.000 - X														
Bore diameter of coupling on the application side		*mm*	X = 024.000 - 060.000														
Mass moment of inertia (relates to the drive) Clamping hub diameter [mm] G 24	J_1	$kgcm^2$	-	-	-	-	-	4.21	3.85	3.28	3.17	2.78	2.73	2.48	2.46	2.43	2.42
		10^{-3} $in.lb.s^2$	-	-	-	-	-	3.73	3.41	2.9	2.81	2.46	2.42	2.19	2.18	2.15	2.14
K 38	J_1	$kgcm^2$	25	19.1	16.3	14.1	12.8	11.1	10.7	10.2	10.1	9.69	9.64	9.39	9.37	9.34	9.33
		10^{-3} $in.lb.s^2$	22.13	16.9	14.43	12.48	11.33	9.82	9.47	9.03	8.94	8.58	8.53	8.31	8.29	8.27	8.26

Please use our sizing software cymex® for a detailed sizing – **www.wittenstein-cymex.com**
Please contact us for optimum sizing at S1 conditions (Continuous operation).

a) At max. 10 % F_{2QMax}
b) Valid for standard clamping hub diameter
c) Refers to center of the output shaft or flange
d) Please reduce input speed at higher ambient temperatures
e) Smooth shaft

View A

Motor shaft diameter [mm]

1-stage

up to 38[4] (K)[5] clamping hub diameter

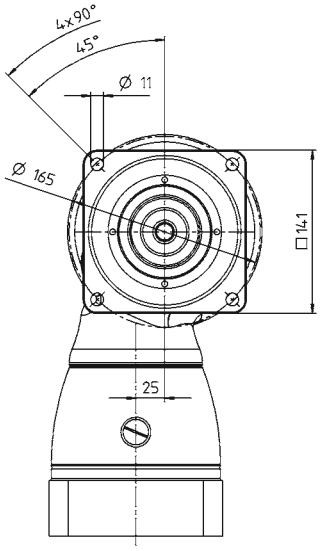

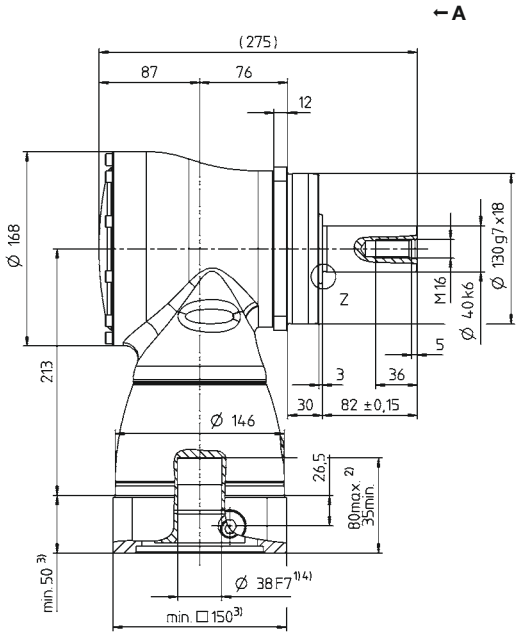

2-stage

up to 24/38 [4] (G[5]/K) clamping hub diameter

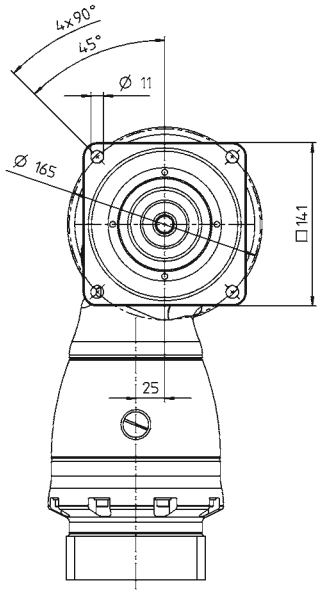

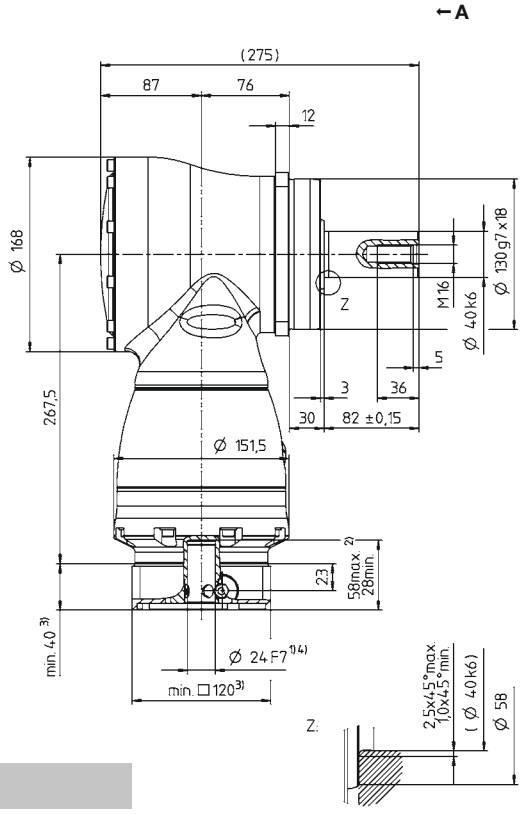

Other output variants

Shaft with key

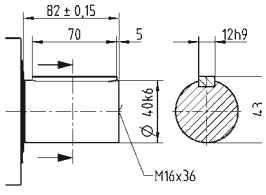

Splined shaft (DIN 5480)

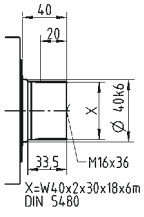

See technical data sheet for available clamping hub diameters (mass moment of inertia). Dimensions available on request.

Non-tolerated dimensions are nominal dimensions
1) Check motor shaft fit
2) Min./Max. permissible motor shaft length. Longer motor shafts are possible, please contact alpha.
3) The dimensions depend on the motor
4) Smaller motor shaft diameter is compensated by a bushing with a minimum thickness of 1 mm
5) Standard clamping hub diameter

SK+ 180 MF 1-/2-stage

			1-stage					2-stage									
Ratio	*i*		**3**	**4**	**5**	**7**	**10**	**12**	**16**	**20**	**25**	**28**	**35**	**40**	**50**	**70**	**100**
Max. torque [a) b) e)]	T_{2a}	*Nm*	768	768	768	550	470	768	768	768	768	768	768	768	768	550	470
		in.lb	6797	6797	6797	4868	4160	6797	6797	6797	6797	6797	6797	6797	6797	4868	4160
Max. acceleration torque [b) e)] (max. 1000 cycles per hour)	T_{2B}	*Nm*	640	640	640	550	470	640	640	640	640	640	640	640	640	550	470
		in.lb	5665	5665	5665	4868	4160	5665	5665	5665	5665	5665	5665	5665	5665	4868	4160
Nominal torque (at n_{1N})	T_{2N}	*Nm*	400	400	400	380	360	400	400	400	400	400	400	400	400	380	360
		in.lb	3540	3540	3540	3363	3186	3540	3540	3540	3540	3540	3540	3540	3540	3363	3186
Emergency stop torque [a) b) e)] (permitted 1000 times during the service life of the gearbox)	T_{2Not}	*Nm*	900	1050	1050	970	900	1050	1050	1050	1050	1050	1050	1050	1050	970	900
		in.lb	7966	9293	9293	8585	7966	9293	9293	9293	9293	9293	9293	9293	9293	8585	7966
Permitted average input speed (at T_{2N} and 20 °C ambient temperature) [d)]	n_{1N}	n_{1T}	1600	1800	2000	1800	1800	2700	2700	2700	2700	2700	2700	2700	2900	3200	3400
Max. input speed	n_{1Max}	*rpm*	4500	4500	4500	4500	4500	4000	4000	4000	4000	4000	4000	4000	4000	4000	4000
Mean no load running torque [b)] (at n_1 = 3000 rpm and 20 °C gearbox temperature)	T_{012}	*Nm*	14.5	12	10	15	12.5	3	2.3	1.8	1.6	1.3	1.2	0.9	0.9	0.9	0.9
		in.lb	128	106	89	133	111	27	20	16	14	12	11	8	8	8	8
Max. backlash	j_t	*arcmin*	Standard ≤ 4														
Torsional rigidity [b)]	C_{t21}	*Nm/arcmin*	64	71	79	78	77	71	71	71	71	71	71	71	78	78	78
		in.lb/arcmin	566	628	699	690	682	628	628	628	628	628	628	628	690	690	690
Max. axial force [c)]	F_{2AMax}	*N*	14200														
		lb_f	3195														
Max. lateral force [c)]	F_{2QMax}	*N*	14700														
		lb_f	3308														
Max. tilting moment	M_{2KMax}	*Nm*	3213														
		in.lb	28438														
Efficiency at full load	η	%	96					94									
Service life	L_h	*h*	> 20000														
Weight (incl. standard adapter plate)	*m*	*kg*	45.4					48									
		lb_m	100					106									
Operating noise (at reference ratio and reference speed – ratio-specific values available in cymex®)	L_{PA}	*dB(A)*	≤ 68														
Max. permitted housing temperature		*°C*	+90														
		F	194														
Ambient temperature		*°C*	0 to +40														
		F	32 to 104														
Lubrication			Lubricated for life														
Direction of rotation			In- and output opposite direction														
Protection class			IP 65														
Metal bellows coupling (recommended product type – validate sizing with cymex®)			BC2 - 00800AA - 055.000 - X														
Bore diameter of coupling on the application side		*mm*	X = 040.000 - 075.000														
Mass moment of inertia (relates to the drive) Clamping hub diameter [mm] — K 38	J_1	*kgcm²*	-	-	-	-	-	15.3	14	12.3	12	10.9	10.7	10.1	10	9.95	9.91
		10^{-3} in.lb.s²	-	-	-	-	-	13.54	12.39	10.89	10.62	9.65	9.47	8.94	8.85	8.81	8.77
M 48	J_1	*kgcm²*	73.3	51.6	42.1	34	29.7	30	28.7	27.1	26.7	25.6	25.4	24.8	24.7	24.7	24.6
		10^{-3} in.lb.s²	64.87	45.67	37.26	30.09	26.28	26.55	25.4	23.98	23.63	22.66	22.48	21.95	21.86	21.86	21.77

Please use our sizing software cymex® for a detailed sizing – **www.wittenstein-cymex.com**
Please contact us for optimum sizing at S1 conditions (Continuous operation).

a) At max. 10 % F_{2QMax}
b) Valid for standard clamping hub diameter
c) Refers to center of the output shaft or flange
d) Please reduce input speed at higher ambient temperatures
e) Smooth shaft

Motor shaft diameter [mm]

1-stage

up to 48 [4] (M)[5] clamping hub diameter

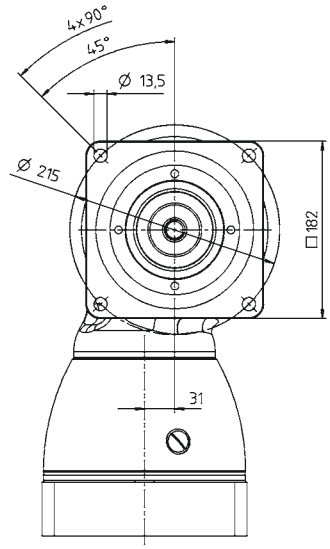

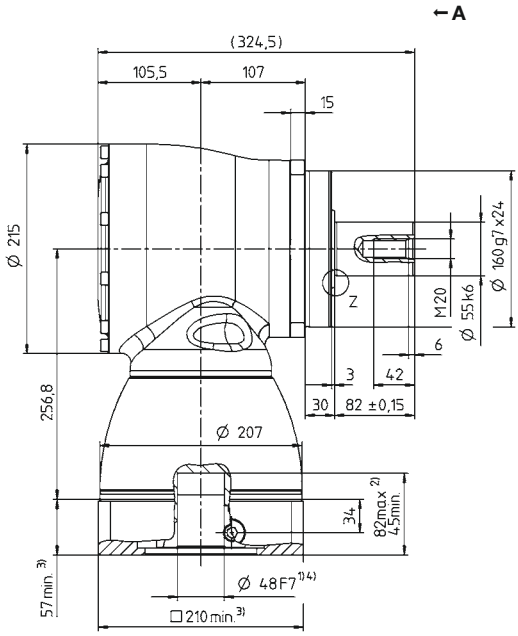

2-stage

up to 38/48 [4] (K[5]/M) clamping hub diameter

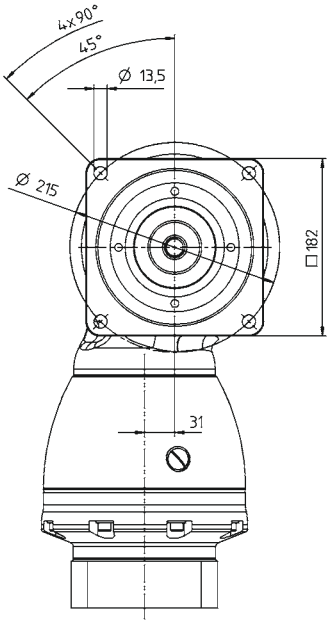

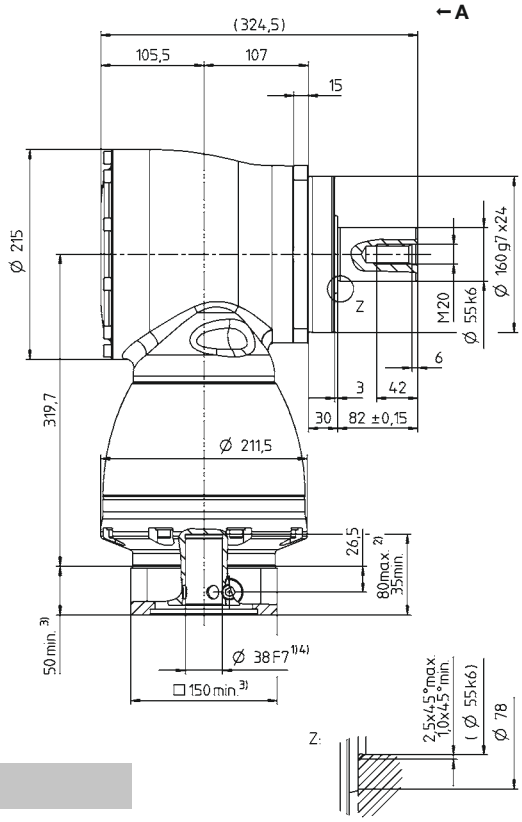

Other output variants

Shaft with key

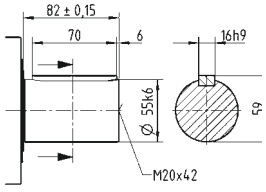

Splined shaft (DIN 5480)

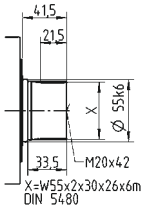

See technical data sheet for available clamping hub diameters (mass moment of inertia). Dimensions available on request.

Non-tolerated dimensions are nominal dimensions
1) Check motor shaft fit
2) Min./Max. permissible motor shaft length. Longer motor shafts are possible, please contact alpha.
3) The dimensions depend on the motor
4) Smaller motor shaft diameter is compensated by a bushing with a minimum thickness of 1 mm
5) Standard clamping hub diameter

SPK+ 075 MF 2-stage

			2-stage									
Ratio	i		**12**	**16**	**20**	**25**	**28**	**35**	**40**	**50**	**70**	**100**
Max. torque [a) b) e)]	T_{2a}	*Nm*	144	144	176	176	176	176	80	100	140	152
		in.lb	1275	1275	1558	1558	1558	1558	708	885	1239	1345
Max. acceleration torque [b) e)] (max. 1000 cycles per hour)	T_{2B}	*Nm*	120	120	132	132	132	132	80	100	132	114
		in.lb	1062	1062	1168	1168	1168	1168	708	885	1168	1009
Nominal torque (at n_{1N})	T_{2N}	*Nm*	75	75	75	75	75	75	60	75	75	52
		in.lb	664	664	664	664	664	664	531	664	664	460
Emergency stop torque [a) b) e)] (permitted 1000 times during the service life of the gearbox)	T_{2Not}	*Nm*	160	200	250	250	250	250	160	200	250	250
		in.lb	1416	1770	2213	2213	2213	2213	1416	1770	2213	2213
Permitted average input speed (at T_{2N} and 20 °C ambient temperature) [d)]	n_{1N}	n_{1T}	2000	2400	2400	2700	2400	2500	2500	2500	2500	2500
Max. input speed	n_{1Max}	*rpm*	7500	7500	7500	7500	7500	7500	7500	7500	7500	7500
Mean no load running torque [b)] (at n_1 = 3000 rpm and 20 °C gearbox temperature)	T_{012}	*Nm*	1.5	1.3	1.2	1.2	1.2	1.3	1.3	1.3	1.3	1.3
		in.lb	13	12	11	11	11	12	12	12	12	12
Max. backlash	j_t	*arcmin*	Standard ≤ 5 / Reduced ≤ 3									
Torsional rigidity [b)]	C_{t21}	*Nm/arcmin*	10	10	10	10	10	10	10	10	10	10
		in.lb/arcmin	89	89	89	89	89	89	89	89	89	89
Max. axial force [c)]	F_{2AMax}	*N*	3350									
		lb_f	754									
Max. lateral force [c)]	F_{2QMax}	*N*	4000									
		lb_f	900									
Max. tilting moment	M_{2KMax}	*Nm*	236									
		in.lb	2089									
Efficiency at full load	η	*%*	94									
Service life	L_h	*h*	> 20000									
Weight (incl. standard adapter plate)	*m*	*kg*	5.2									
		lb_m	11									
Operating noise (at reference ratio and reference speed – ratio-specific values available in cymex®)	L_{PA}	*dB(A)*	≤ 66									
Max. permitted housing temperature		*°C*	+90									
		F	194									
Ambient temperature		*°C*	0 to +40									
		F	32 to 104									
Lubrication			Lubricated for life									
Direction of rotation			In- and output opposite direction									
Protection class			IP 65									
Metal bellows coupling (recommended product type – validate sizing with cymex®)			BC2 - 00150AA - 022.000 - X									
Bore diameter of coupling on the application side		*mm*	X = 019.000 - 042.000									
Mass moment of inertia (relates to the drive) Clamping hub diameter [mm] C 14	J_1	$kgcm^2$	0.54	0.45	0.44	0.4	0.44	0.36	0.35	0.34	0.34	0.34
		10^{-3} $in.lb.s^2$	0.48	0.4	0.39	0.35	0.39	0.32	0.31	0.3	0.3	0.3
E 19	J_1	$kgcm^2$	0.89	0.8	0.79	0.75	0.79	0.71	0.7	0.7	0.7	0.69
		10^{-3} $in.lb.s^2$	0.79	0.71	0.7	0.66	0.7	0.63	0.62	0.62	0.62	0.61

Please use our sizing software cymex® for a detailed sizing – **www.wittenstein-cymex.com**
Please contact us for optimum sizing at S1 conditions (Continuous operation).

a) At max. 10 % F_{2QMax}
b) Valid for standard clamping hub diameter
c) Refers to center of the output shaft or flange
d) Please reduce input speed at higher ambient temperatures
e) Smooth shaft

View A

Motor shaft diameter [mm]

2-stage

up to 14/19 [4] (C[5]/E) clamping hub diameter

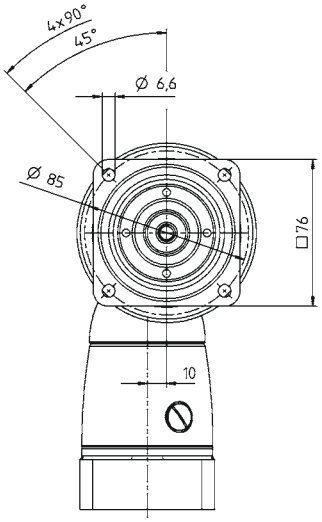

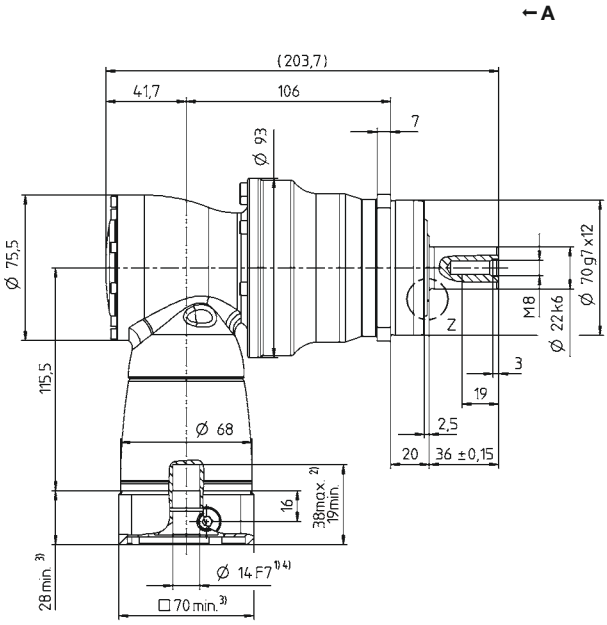

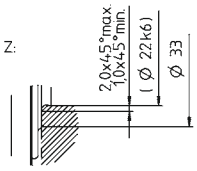

Other output variants

Shaft with key

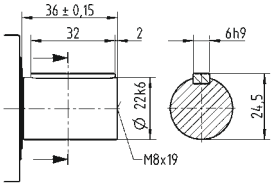

Splined shaft (DIN 5480)

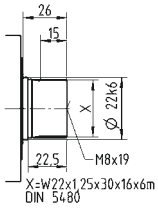

Shaft mounted

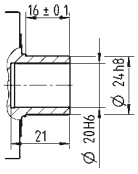

See technical data sheet for available clamping hub diameters (mass moment of inertia). Dimensions available on request.

Non-tolerated dimensions are nominal dimensions

1) Check motor shaft fit
2) Min./Max. permissible motor shaft length. Longer motor shafts are possible, please contact alpha.
3) The dimensions depend on the motor
4) Smaller motor shaft diameter is compensated by a bushing with a minimum thickness of 1 mm
5) Standard clamping hub diameter

SPK+ 075 MF 3-stage

			3-stage													
Ratio	*i*		**64**	**84**	**100**	**125**	**140**	**175**	**200**	**250**	**280**	**350**	**400**	**500**	**700**	**1000**
Max. torque [a) b) e)]	T_{2a}	*Nm*	144	144	176	176	176	176	176	176	176	176	80	100	140	152
		in.lb	1275	1275	1558	1558	1558	1558	1558	1558	1558	1558	708	885	1239	1345
Max. acceleration torque [b) e)] (max. 1000 cycles per hour)	T_{2B}	*Nm*	120	120	132	132	132	132	132	132	132	132	80	100	132	114
		in.lb	1062	1062	1168	1168	1168	1168	1168	1168	1168	1168	708	885	1168	1009
Nominal torque (at n_{1N})	T_{2N}	*Nm*	75	75	75	75	75	75	75	75	75	75	60	75	75	52
		in.lb	664	664	664	664	664	664	664	664	664	664	531	664	664	460
Emergency stop torque [a) b) e)] (permitted 1000 times during the service life of the gearbox)	T_{2Not}	*Nm*	200	160	250	250	250	250	250	250	250	250	160	200	250	250
		in.lb	1770	1416	2213	2213	2213	2213	2213	2213	2213	2213	1416	1770	2213	2213
Permitted average input speed (at T_{2N} and 20 °C ambient temperature) [d)]	n_{1N}	n_{1T}	4400	4400	4400	4400	4400	4400	4400	4800	4400	4800	5500	5500	5500	5500
Max. input speed	n_{1Max}	*rpm*	6000	6000	6000	6000	6000	6000	6000	6000	6000	6000	6000	6000	6000	6000
Mean no load running torque [b)] (at n_1 = 3000 rpm and 20 °C gearbox temperature)	T_{012}	*Nm*	0.3	0.3	0.3	0.3	0.3	0.3	0.2	0.2	0.2	0.2	0.2	0.2	0.2	0.2
		in.lb	3	3	3	3	3	3	2	2	2	2	2	2	2	2
Max. backlash	j_t	*arcmin*	Standard ≤ 5 / Reduced ≤ 3													
Torsional rigidity [b)]	C_{t21}	*Nm/arcmin*	10	10	10	10	10	10	10	10	10	10	10	10	10	10
		in.lb/arcmin	89	89	89	89	89	89	89	89	89	89	89	89	89	89
Max. axial force [c)]	F_{2AMax}	*N*	3350													
		lb_f	754													
Max. lateral force [c)]	F_{2QMax}	*N*	4000													
		lb_f	900													
Max. tilting moment	M_{2KMax}	*Nm*	236													
		in.lb	2089													
Efficiency at full load	η	%	92													
Service life	L_h	*h*	> 20000													
Weight (incl. standard adapter plate)	*m*	*kg*	5.5													
		lb_m	12													
Operating noise (at reference ratio and reference speed – ratio-specific values available in cymex®)	L_{PA}	*dB(A)*	≤ 66													
Max. permitted housing temperature		*°C*	+90													
		F	194													
Ambient temperature		*°C*	0 to +40													
		F	32 to 104													
Lubrication			Lubricated for life													
Direction of rotation			In- and output opposite direction													
Protection class			IP 65													
Metal bellows coupling (recommended product type – validate sizing with cymex®)			BC2 - 00150AA - 022.000 - X													
Bore diameter of coupling on the application side		*mm*	X = 019.000 - 042.000													
Mass moment of inertia (relates to the drive) Clamping hub diameter [mm] B 11	J_1	*kgcm²*	0.09	0.07	0.08	0.07	0.06	0.06	0.06	0.06	0.06	0.06	0.06	0.06	0.06	0.06
		10^{-3} in.lb.s²	0.08	0.06	0.07	0.06	0.05	0.05	0.05	0.05	0.05	0.05	0.05	0.05	0.05	0.05
C 14	J_1	*kgcm²*	0.2	0.18	0.19	0.19	0.18	0.18	0.17	0.17	0.17	0.17	0.17	0.17	0.17	0.17
		10^{-3} in.lb.s²	0.18	0.16	0.17	0.17	0.16	0.16	0.15	0.15	0.15	0.15	0.15	0.15	0.15	0.15

Please use our sizing software cymex® for a detailed sizing – **www.wittenstein-cymex.com**
Please contact us for optimum sizing at S1 conditions (Continuous operation).

[a)] At max. 10 % F_{2QMax}
[b)] Valid for standard clamping hub diameter
[c)] Refers to center of the output shaft or flange
[d)] Please reduce input speed at higher ambient temperatures
[e)] Smooth shaft

Motor shaft diameter [mm]

3-stage

up to 11/14 [4] (B[5]/C) clamping hub diameter

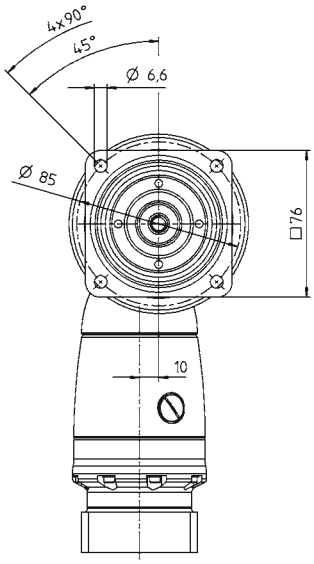

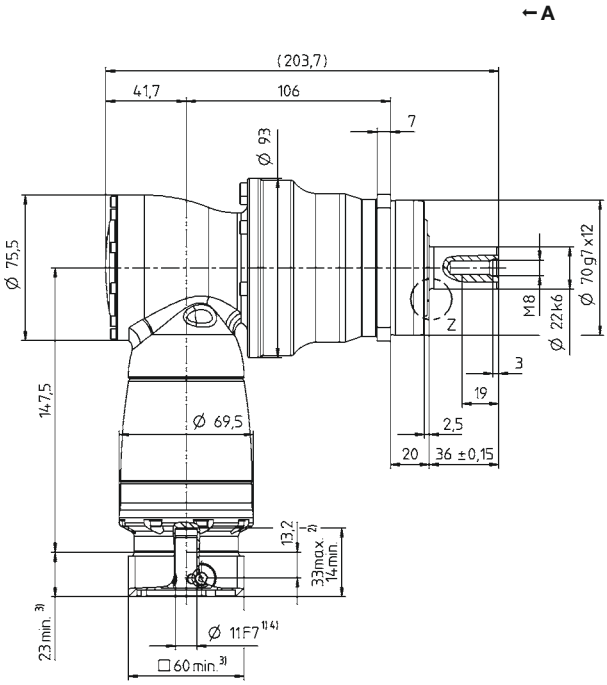

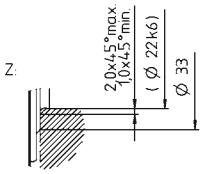

Other output variants

Shaft with key

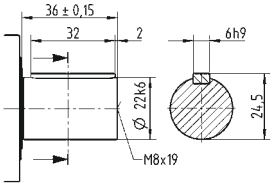

Splined shaft (DIN 5480)

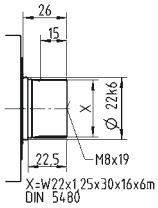

Shaft mounted

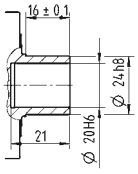

See technical data sheet for available clamping hub diameters (mass moment of inertia). Dimensions available on request.

Non-tolerated dimensions are nominal dimensions

1) Check motor shaft fit
2) Min./Max. permissible motor shaft length. Longer motor shafts are possible, please contact alpha.
3) The dimensions depend on the motor
4) Smaller motor shaft diameter is compensated by a bushing with a minimum thickness of 1 mm
5) Standard clamping hub diameter

			2-stage									
Ratio	*i*		**12**	**16**	**20**	**25**	**28**	**35**	**40**	**50**	**70**	**100**
Max. torque [a) b) e)]	T_{2a}	*Nm*	336	336	420	420	428	428	200	250	350	376
		in.lb	2974	2974	3717	3717	3788	3788	1770	2213	3098	3328
Max. acceleration torque [b) e)] (max. 1000 cycles per hour)	T_{2B}	*Nm*	280	280	350	350	378	378	200	250	350	282
		in.lb	2478	2478	3098	3098	3346	3346	1770	2213	3098	2496
Nominal torque (at n_{1N})	T_{2N}	*Nm*	180	180	175	175	170	170	160	175	170	120
		in.lb	1593	1593	1549	1549	1505	1505	1416	1549	1505	1062
Emergency stop torque [a) b) e)] (permitted 1000 times during the service life of the gearbox)	T_{2Not}	*Nm*	380	460	575	575	625	625	400	500	625	625
		in.lb	3363	4071	5089	5089	5532	5532	3540	4425	5532	5532
Permitted average input speed (at T_{2N} and 20 °C ambient temperature) [d)]	n_{1N}	n_{1T}	2000	2400	2400	2700	2400	2500	2500	2500	2500	2500
Max. input speed	n_{1Max}	*rpm*	7500	7500	7500	7500	7500	7500	7500	7500	7500	7500
Mean no load running torque [b)] (at n_1 = 3000 rpm and 20 °C gearbox temperature)	T_{012}	*Nm*	2.5	2.1	2	1.8	2	2.2	2	2	2	2
		in.lb	22	19	18	16	18	19	18	18	18	18
Max. backlash	j_t	*arcmin*	Standard ≤ 4 / Reduced ≤ 2									
Torsional rigidity [b)]	C_{t21}	*Nm/arcmin*	31	31	31	31	31	31	31	31	31	31
		in.lb/arcmin	274	274	274	274	274	274	274	274	274	274
Max. axial force [c)]	F_{2AMax}	*N*	5650									
		lb_f	1271									
Max. lateral force [c)]	F_{2QMax}	*N*	6300									
		lb_f	1418									
Max. tilting moment	M_{2KMax}	*Nm*	487									
		in.lb	4310									
Efficiency at full load	η	%	94									
Service life	L_h	*h*	> 20000									
Weight (incl. standard adapter plate)	*m*	*kg*	9.7									
		lb_m	21									
Operating noise (at reference ratio and reference speed – ratio-specific values available in cymex®)	L_{PA}	*dB(A)*	≤ 68									
Max. permitted housing temperature		°C	+90									
		F	194									
Ambient temperature		°C	0 to +40									
		F	32 to 104									
Lubrication			Lubricated for life									
Direction of rotation			In- and output opposite direction									
Protection class			IP 65									
Metal bellows coupling (recommended product type – validate sizing with cymex®)			BC2 - 00300AA - 032.000 - X									
Bore diameter of coupling on the application side		*mm*	X = 024.000 - 060.000									
Mass moment of inertia (relates to the drive) — E 19	J_1	$kgcm^2$	1.48	1.2	1.17	1.05	1.15	0.95	0.9	0.89	0.89	0.89
		10^{-3} $in.lb.s^2$	1.31	1.06	1.04	0.93	1.02	0.84	0.8	0.79	0.79	0.79
Clamping hub diameter [mm] — H 28	J_1	$kgcm^2$	2.89	2.62	2.59	2.46	2.56	2.36	2.31	2.31	2.3	2.3
		10^{-3} $in.lb.s^2$	2.56	2.32	2.29	2.18	2.27	2.09	2.04	2.04	2.04	2.04

Please use our sizing software cymex® for a detailed sizing – **www.wittenstein-cymex.com**
Please contact us for optimum sizing at S1 conditions (Continuous operation).

a) At max. 10 % F_{2QMax}
b) Valid for standard clamping hub diameter
c) Refers to center of the output shaft or flange
d) Please reduce input speed at higher ambient temperatures
e) Smooth shaft

Motor shaft diameter [mm]

2-stage

up to 19/28 [4] (E[5]/H) clamping hub diameter

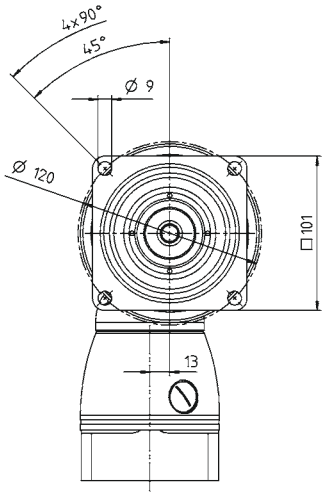

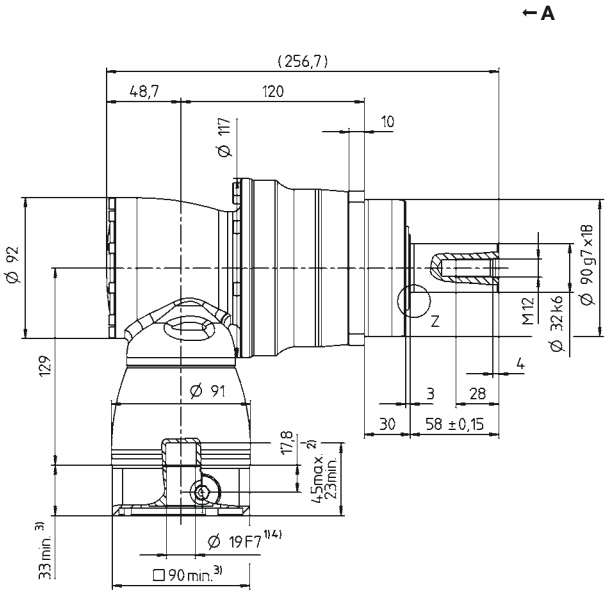

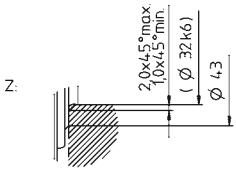

Other output variants

Shaft with key

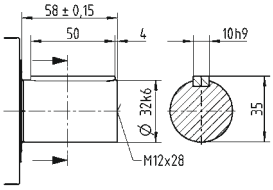

Splined shaft (DIN 5480)

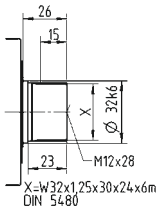

Shaft mounted

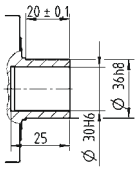

See technical data sheet for available clamping hub diameters (mass moment of inertia). Dimensions available on request.

Non-tolerated dimensions are nominal dimensions

1) Check motor shaft fit
2) Min./Max. permissible motor shaft length. Longer motor shafts are possible, please contact alpha.
3) The dimensions depend on the motor
4) Smaller motor shaft diameter is compensated by a bushing with a minimum thickness of 1 mm
5) Standard clamping hub diameter

				3-stage													
Ratio			*i*	**64**	**84**	**100**	**125**	**140**	**175**	**200**	**250**	**280**	**350**	**400**	**500**	**700**	**1000**
Max. torque [a) b) e)]			T_{2a}	*Nm*	336	336	420	420	420	420	420	420	428	428	200	250	350	376
				in.lb	2974	2974	3717	3717	3717	3717	3717	3717	3788	3788	1770	2213	3098	3328
Max. acceleration torque [b) e)] (max. 1000 cycles per hour)			T_{2B}	*Nm*	280	280	350	350	350	350	350	350	378	378	200	250	350	282
				in.lb	2478	2478	3098	3098	3098	3098	3098	3098	3346	3346	1770	2213	3098	2496
Nominal torque (at n_{1N})			T_{2N}	*Nm*	180	180	175	175	175	175	175	175	170	170	160	175	170	120
				in.lb	1593	1593	1549	1549	1549	1549	1549	1549	1505	1505	1416	1549	1505	1062
Emergency stop torque [a) b) e)] (permitted 1000 times during the service life of the gearbox)			T_{2Not}	*Nm*	460	380	575	575	575	575	575	575	625	625	400	500	625	625
				in.lb	4071	3363	5089	5089	5089	5089	5089	5089	5532	5532	3540	4425	5532	5532
Permitted average input speed (at T_{2N} and 20 °C ambient temperature) [d)]			n_{1N}	n_{1T}	3500	3500	3500	3500	3500	3500	3500	3800	3500	3800	4500	4500	4500	4500
Max. input speed			n_{1Max}	*rpm*	6000	6000	6000	6000	6000	6000	6000	6000	6000	6000	6000	6000	6000	6000
Mean no load running torque [b)] (at n_1 = 3000 rpm and 20 °C gearbox temperature)			T_{012}	*Nm*	0.4	0.3	0.3	0.3	0.3	0.3	0.2	0.2	0.2	0.2	0.2	0.2	0.2	0.2
				in.lb	4	3	3	3	3	3	2	2	2	2	2	2	2	2
Max. backlash			j_t	*arcmin*	Standard ≤ 4 / Reduced ≤ 2													
Torsional rigidity [b)]			C_{t21}	*Nm/arcmin*	31	31	31	31	31	31	31	31	31	31	31	31	31	31
				in.lb/arcmin	274	274	274	274	274	274	274	274	274	274	274	274	274	274
Max. axial force [c)]			F_{2AMax}	*N*	5650													
				lb_f	1271													
Max. lateral force [c)]			F_{2QMax}	*N*	6300													
				lb_f	1418													
Max. tilting moment			M_{2KMax}	*Nm*	487													
				in.lb	4310													
Efficiency at full load			η	%	92													
Service life			L_h	*h*	> 20000													
Weight (incl. standard adapter plate)			*m*	*kg*	10.3													
				lb_m	23													
Operating noise (at reference ratio and reference speed – ratio-specific values available in cymex®)			L_{PA}	*dB(A)*	≤ 68													
Max. permitted housing temperature				*°C*	+90													
				F	194													
Ambient temperature				*°C*	0 to +40													
				F	32 to 104													
Lubrication					Lubricated for life													
Direction of rotation					In- and output opposite direction													
Protection class					IP 65													
Metal bellows coupling (recommended product type – validate sizing with cymex®)					BC2 - 00300AA - 032.000 - X													
Bore diameter of coupling on the application side				*mm*	X = 024.000 - 060.000													
Mass moment of inertia (relates to the drive) Clamping hub diameter [mm]	C	14	J_1	$kgcm^2$	0.28	0.23	0.24	0.23	0.21	0.2	0.19	0.18	0.19	0.18	0.18	0.18	0.18	0.18
				10^{-3} *in.lb.s²*	0.25	0.2	0.21	0.2	0.19	0.18	0.17	0.16	0.17	0.16	0.16	0.16	0.16	0.16
	E	19	J_1	$kgcm^2$	0.72	0.63	0.68	0.68	0.63	0.63	0.63	0.63	0.63	0.63	0.63	0.63	0.63	0.63
				10^{-3} *in.lb.s²*	0.64	0.56	0.6	0.6	0.56	0.56	0.56	0.56	0.56	0.56	0.56	0.56	0.56	0.56

Please use our sizing software cymex® for a detailed sizing – **www.wittenstein-cymex.com**
Please contact us for optimum sizing at S1 conditions (Continuous operation).

a) At max. 10 % F_{2QMax}
b) Valid for standard clamping hub diameter
c) Refers to center of the output shaft or flange
d) Please reduce input speed at higher ambient temperatures
e) Smooth shaft

View A

Motor shaft diameter [mm]

3-stage

up to 14/19 [4] (C [5]/E) clamping hub diameter

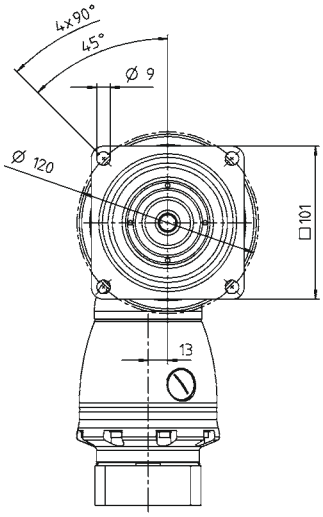

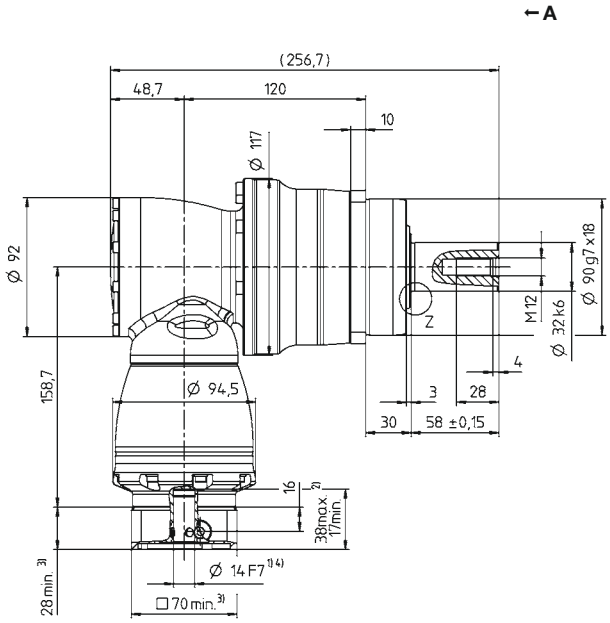

Z:

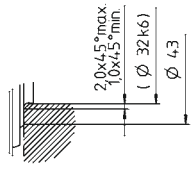

Other output variants

Shaft with key

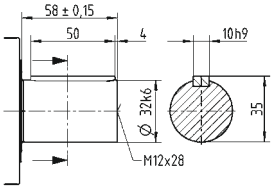

Splined shaft (DIN 5480)

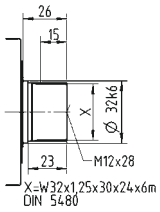

Shaft mounted

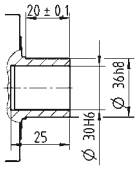

See technical data sheet for available clamping hub diameters (mass moment of inertia). Dimensions available on request.

Non-tolerated dimensions are nominal dimensions

1) Check motor shaft fit
2) Min. / Max. permissible motor shaft length. Longer motor shafts are possible, please contact alpha.
3) The dimensions depend on the motor
4) Smaller motor shaft diameter is compensated by a bushing with a minimum thickness of 1 mm
5) Standard clamping hub diameter

				2-stage									
Ratio			*i*	**12**	**16**	**20**	**25**	**28**	**35**	**40**	**50**	**70**	**100**
Max. torque [a) b) e)]			T_{2a} *Nm*	816	816	1020	1020	825	825	500	625	625	720
			T_{2a} *in.lb*	7222	7222	9028	9028	7302	7302	4425	5532	5532	6373
Max. acceleration torque [b) e)] (max. 1000 cycles per hour)			T_{2B} *Nm*	680	680	792	792	792	792	500	625	792	636
			T_{2B} *in.lb*	6019	6019	7010	7010	7010	7010	4425	5532	7010	5629
Nominal torque (at n_{1N})			T_{2N} *Nm*	360	360	360	360	360	360	320	360	360	220
			T_{2N} *in.lb*	3186	3186	3186	3186	3186	3186	2832	3186	3186	1947
Emergency stop torque [a) b) e)] (permitted 1000 times during the service life of the gearbox)			T_{2Not} *Nm*	880	1040	1300	1300	1350	1350	1000	1250	1350	1250
			T_{2Not} *in.lb*	7789	9205	11506	11506	11949	11949	8851	11064	11949	11064
Permitted average input speed (at T_{2N} and 20 °C ambient temperature) [d)]			n_{1N} n_{1T}	1900	2300	2300	2600	2300	2300	2300	2300	2300	2300
Max. input speed			n_{1Max} *rpm*	5500	5500	5500	5500	5500	5500	5500	5500	5500	5500
Mean no load running torque [b)] (at n_1 = 3000 rpm and 20 °C gearbox temperature)			T_{012} *Nm*	4	3.7	3.6	2.8	3.5	3.9	3.1	3.1	3.1	3.1
			T_{012} *in.lb*	35	33	32	25	31	35	27	27	27	27
Max. backlash			j_t *arcmin*	Standard ≤ 4 / Reduced ≤ 2									
Torsional rigidity [b)]			C_{t21} *Nm/arcmin*	53	53	53	53	53	53	53	53	53	53
			C_{t21} *in.lb/arcmin*	469	469	469	469	469	469	469	469	469	469
Max. axial force [c)]			F_{2AMax} *N*	9870									
			F_{2AMax} lb_f	2221									
Max. lateral force [c)]			F_{2QMax} *N*	9450									
			F_{2QMax} lb_f	2126									
Max. tilting moment			M_{2KMax} *Nm*	952									
			M_{2KMax} *in.lb*	8426									
Efficiency at full load			η %	94									
Service life			L_h *h*	> 20000									
Weight (incl. standard adapter plate)			*m* *kg*	20									
			m lb_m	44									
Operating noise (at reference ratio and reference speed – ratio-specific values available in cymex®)			L_{PA} *dB(A)*	≤ 68									
Max. permitted housing temperature			*°C*	+90									
			F	194									
Ambient temperature			*°C*	0 to +40									
			F	32 to 104									
Lubrication				Lubricated for life									
Direction of rotation				In- and output opposite direction									
Protection class				IP 65									
Metal bellows coupling (recommended product type – validate sizing with cymex®)				BC2 - 00800AA - 040.000 - X									
Bore diameter of coupling on the application side			*mm*	X = 040.000 - 075.000									
Mass moment of inertia (relates to the drive) Clamping hub diameter [mm]	H	28	J_1 *kgcm²*	4.68	3.82	3.75	3.31	3.68	2.97	2.8	2.79	2.78	2.77
			J_1 *10^{-3} in.lb.s²*	4.14	3.38	3.32	2.93	3.26	2.63	2.48	2.47	2.46	2.45
	K	38	J_1 *kgcm²*	11.8	11	10.9	10.5	10.9	10.1	9.96	9.95	9.94	9.94
			J_1 *10^{-3} in.lb.s²*	10.44	9.74	9.65	9.29	9.65	8.94	8.81	8.81	8.8	8.8

Please use our sizing software cymex® for a detailed sizing – **www.wittenstein-cymex.com**
Please contact us for optimum sizing at S1 conditions (Continuous operation).

[a)] At max. 10 % F_{2QMax}
[b)] Valid for standard clamping hub diameter
[c)] Refers to center of the output shaft or flange
[d)] Please reduce input speed at higher ambient temperatures
[e)] Smooth shaft

View A

Motor shaft diameter [mm]

2-stage

up to 28/38 [4] (H[5]/K) clamping hub diameter

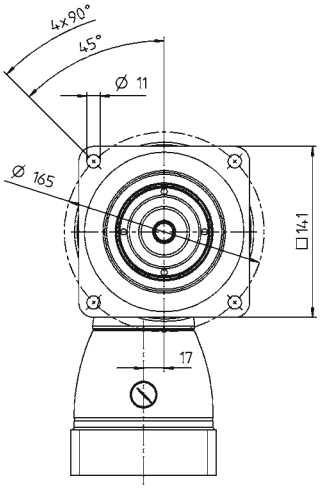

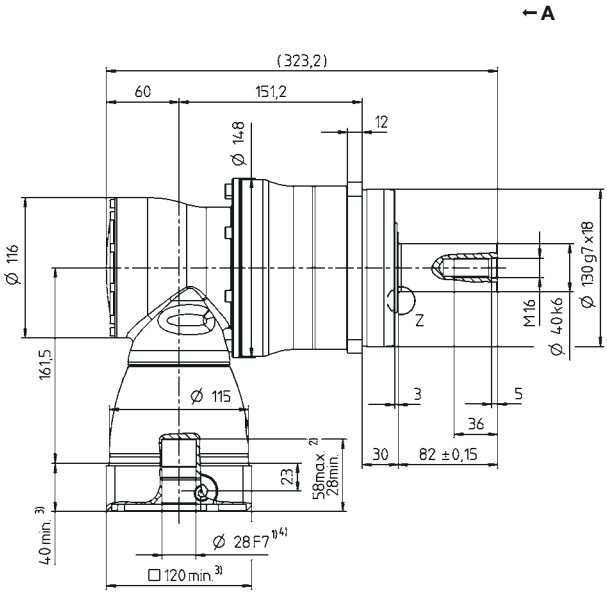

Z:

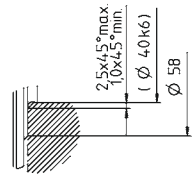

Other output variants

Shaft with key

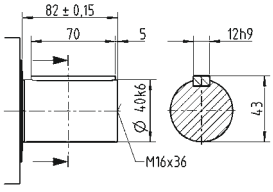

Splined shaft (DIN 5480)

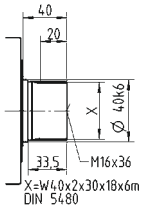

Shaft mounted

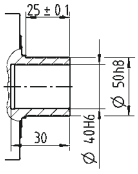

See technical data sheet for available clamping hub diameters (mass moment of inertia). Dimensions available on request.

Non-tolerated dimensions are nominal dimensions

1) Check motor shaft fit
2) Min./Max. permissible motor shaft length. Longer motor shafts are possible, please contact alpha.
3) The dimensions depend on the motor
4) Smaller motor shaft diameter is compensated by a bushing with a minimum thickness of 1 mm
5) Standard clamping hub diameter

SPK+ 140 MF 3-stage

				3-stage													
Ratio			*i*	**64**	**84**	**100**	**125**	**140**	**175**	**200**	**250**	**280**	**350**	**400**	**500**	**700**	**1000**
Max. torque [a) b) e)]			T_{2a}	*Nm*	816	816	1020	1020	1020	1020	1020	1020	825	825	500	625	825	720
				in.lb	7222	7222	9028	9028	9028	9028	9028	9028	7302	7302	4425	5532	7302	6373
Max. acceleration torque [b) e)] (max. 1000 cycles per hour)			T_{2B}	*Nm*	680	680	792	792	792	792	792	792	792	792	500	625	792	636
				in.lb	6019	6019	7010	7010	7010	7010	7010	7010	7010	7010	4425	5532	7010	5629
Nominal torque (at n_{1N})			T_{2N}	*Nm*	360	360	360	360	360	360	360	360	360	360	320	360	360	220
				in.lb	3186	3186	3186	3186	3186	3186	3186	3186	3186	3186	2832	3186	3186	1947
Emergency stop torque [a) b) e)] (permitted 1000 times during the service life of the gearbox)			T_{2Not}	*Nm*	1040	880	1300	1300	1300	1300	1300	1300	1350	1350	1000	1250	1350	1250
				in.lb	9205	7789	11506	11506	11506	11506	11506	11506	11949	11949	8851	11064	11949	11064
Permitted average input speed (at T_{2N} and 20 °C ambient temperature) [d)]			n_{1N}	n_{1T}	3100	3100	3100	3100	3100	3100	3100	3500	3100	3500	4200	4200	4200	4200
Max. input speed			n_{1Max}	*rpm*	4500	4500	4500	4500	4500	4500	4500	4500	4500	4500	4500	4500	4500	4500
Mean no load running torque [b)] (at n_1 = 3000 rpm and 20 °C gearbox temperature)			T_{012}	*Nm*	0.7	0.4	0.6	0.5	0.5	0.4	0.3	0.3	0.3	0.3	0.3	0.3	0.3	0.3
				in.lb	6	4	5	4	4	4	3	3	3	3	3	3	3	3
Max. backlash			j_t	*arcmin*	Standard ≤ 4 / Reduced ≤ 2													
Torsional rigidity [b)]			C_{t21}	*Nm/arcmin*	53	53	53	53	53	53	53	53	53	53	53	53	53	53
				in.lb/arcmin	469	469	469	469	469	469	469	469	469	469	469	469	469	469
Max. axial force [c)]			F_{2AMax}	*N*	9870													
				lb_f	2221													
Max. lateral force [c)]			F_{2QMax}	*N*	9450													
				lb_f	2126													
Max. tilting moment			M_{2KMax}	*Nm*	952													
				in.lb	8426													
Efficiency at full load			η	%	92													
Service life			L_h	*h*	> 20000													
Weight (incl. standard adapter plate)			*m*	*kg*	20.7													
				lb_m	46													
Operating noise (at reference ratio and reference speed – ratio-specific values available in cymex®)			L_{PA}	*dB(A)*	≤ 68													
Max. permitted housing temperature				*°C*	+90													
				F	194													
Ambient temperature				*°C*	0 to +40													
				F	32 to 104													
Lubrication					Lubricated for life													
Direction of rotation					In- and output opposite direction													
Protection class					IP 65													
Metal bellows coupling (recommended product type – validate sizing with cymex®)					BC2 - 00800AA - 040.000 - X													
Bore diameter of coupling on the application side				*mm*	X = 040.000 - 075.000													
Mass moment of inertia (relates to the drive) Clamping hub diameter [mm]	E	19	J_1	*kgcm²*	1.01	0.76	0.88	0.85	0.76	0.75	0.7	0.69	0.7	0.69	0.69	0.69	0.69	0.69
				10^{-3} in.lb.s²	0.89	0.67	0.78	0.75	0.67	0.66	0.62	0.61	0.62	0.61	0.61	0.61	0.61	0.61
	G	24	J_1	*kgcm²*	2.57	2.32	2.44	2.42	2.32	2.31	2.26	2.25	2.26	2.25	2.25	2.25	2.25	2.25
				10^{-3} in.lb.s²	2.27	2.05	2.16	2.14	2.05	2.04	2	1.99	2	1.99	1.99	1.99	1.99	1.99

Please use our sizing software cymex® for a detailed sizing – **www.wittenstein-cymex.com**
Please contact us for optimum sizing at S1 conditions (Continuous operation).

a) At max. 10 % F_{2QMax}
b) Valid for standard clamping hub diameter
c) Refers to center of the output shaft or flange
d) Please reduce input speed at higher ambient temperatures
e) Smooth shaft

View A

Motor shaft diameter [mm]

3-stage

up to 19/24 [4] (E[5]/G) clamping hub diameter

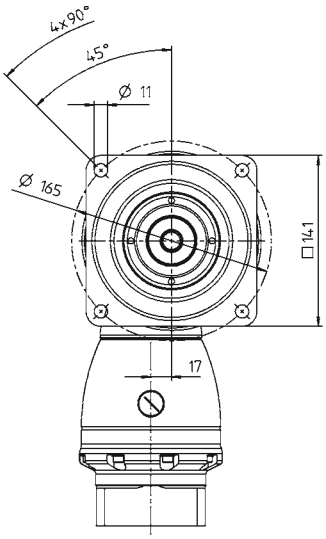

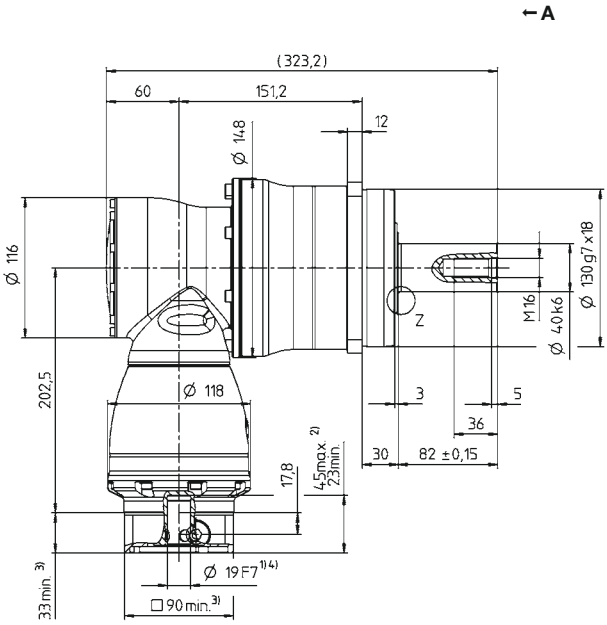

Z:

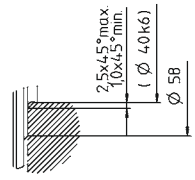

Other output variants

Shaft with key

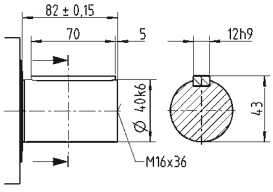

Splined shaft (DIN 5480)

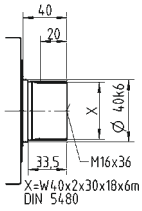

Shaft mounted

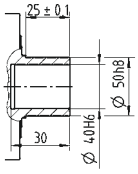

See technical data sheet for available clamping hub diameters (mass moment of inertia). Dimensions available on request.

Non-tolerated dimensions are nominal dimensions

1) Check motor shaft fit
2) Min./Max. permissible motor shaft length. Longer motor shafts are possible, please contact alpha.
3) The dimensions depend on the motor
4) Smaller motor shaft diameter is compensated by a bushing with a minimum thickness of 1 mm
5) Standard clamping hub diameter

SPK+ 180 MF 2-stage

			2-stage									
Ratio	i		**12**	**16**	**20**	**25**	**28**	**35**	**40**	**50**	**70**	**100**
Max. torque [a) b) e)]	T_{2a}	*Nm*	1440	1440	1800	1800	1936	1936	840	1050	1470	1552
		in.lb	12745	12745	15931	15931	17135	17135	7435	9293	13011	13736
Max. acceleration torque [b) e)] (max. 1000 cycles per hour)	T_{2B}	*Nm*	1200	1200	1452	1452	1452	1452	840	1050	1452	1164
		in.lb	10621	10621	12851	12851	12851	12851	7435	9293	12851	10302
Nominal torque (at n_{1N})	T_{2N}	*Nm*	750	750	750	750	750	750	640	750	750	750
		in.lb	6638	6638	6638	6638	6638	6638	5665	6638	6638	6638
Emergency stop torque [a) b) e)] (permitted 1000 times during the service life of the gearbox)	T_{2Not}	*Nm*	1600	2000	2500	2500	2750	2750	1600	2000	2750	2750
		in.lb	14161	17702	22127	22127	24340	24340	14161	17702	24340	24340
Permitted average input speed (at T_{2N} and 20 °C ambient temperature) [d)]	n_{1N}	n_{1T}	1600	1900	1900	2100	1900	2100	2100	2100	2100	2100
Max. input speed	n_{1Max}	*rpm*	5000	5000	5000	5000	5000	5000	5000	5000	5000	5000
Mean no load running torque [b)] (at n_1 = 3000 rpm and 20 °C gearbox temperature)	T_{012}	*Nm*	9	6.5	6.5	5.5	6	8	6	6	6	6
		in.lb	80	58	58	49	53	71	53	53	53	53
Max. backlash	j_t	*arcmin*	Standard ≤ 4 / Reduced ≤ 2									
Torsional rigidity [b)]	C_{t21}	*Nm/arcmin*	175	175	175	175	175	175	175	175	175	175
		in.lb/arcmin	1549	1549	1549	1549	1549	1549	1549	1549	1549	1549
Max. axial force [c)]	F_{2AMax}	*N*	15570									
		lb_f	3503									
Max. lateral force [c)]	F_{2QMax}	*N*	15400									
		lb_f	3465									
Max. tilting moment	M_{2KMax}	*Nm*	1600									
		in.lb	14161									
Efficiency at full load	η	*%*	94									
Service life	L_h	*h*	> 20000									
Weight (incl. standard adapter plate)	*m*	*kg*	45									
		lb_m	99									
Operating noise (at reference ratio and reference speed – ratio-specific values available in cymex®)	L_{PA}	*dB(A)*	≤ 70									
Max. permitted housing temperature		*°C*	+90									
		F	194									
Ambient temperature		*°C*	0 to +40									
		F	32 to 104									
Lubrication			Lubricated for life									
Direction of rotation			In- and output opposite direction									
Protection class			IP 65									
Metal bellows coupling (recommended product type – validate sizing with cymex®)			BC2 - 01500AA - 055.000 - X									
Bore diameter of coupling on the application side		*mm*	X = 050.000 - 080.000									
Mass moment of inertia (relates to the drive) K 38 Clamping hub diameter [mm]	J_1	*kgcm²*	24.7	19.5	19	16.3	18.6	14	12.9	12.8	12.7	12.7
		10^{-3} in.lb.s²	21.86	17.26	16.82	14.43	16.46	12.39	11.42	11.33	11.24	11.24

Please use our sizing software cymex® for a detailed sizing – **www.wittenstein-cymex.com**
Please contact us for optimum sizing at S1 conditions (Continuous operation).

a) At max. 10 % F_{2QMax}
b) Valid for standard clamping hub diameter
c) Refers to center of the output shaft or flange
d) Please reduce input speed at higher ambient temperatures
e) Smooth shaft

View A

Motor shaft diameter [mm]

2-stage

up to 38 [4] (K)[5] clamping hub diameter

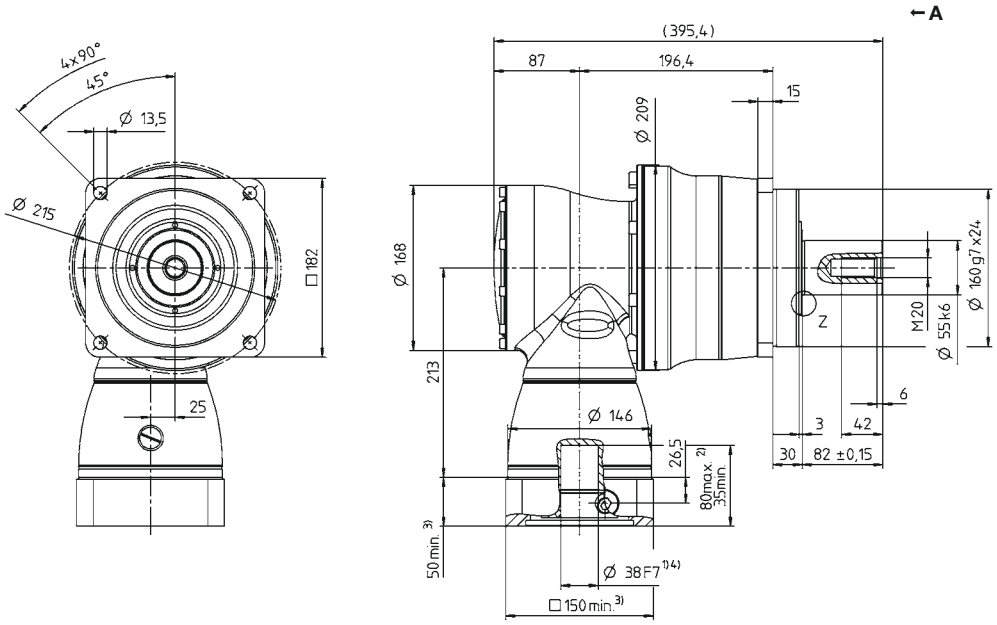

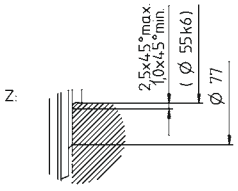

Other output variants

Shaft with key

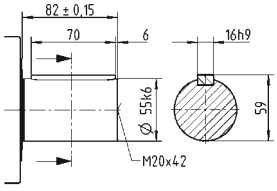

Splined shaft (DIN 5480)

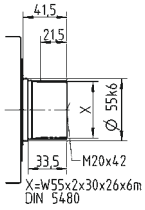

Shaft mounted

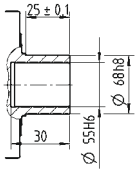

See technical data sheet for available clamping hub diameters (mass moment of inertia). Dimensions available on request.

Non-tolerated dimensions are nominal dimensions

1) Check motor shaft fit
2) Min. / Max. permissible motor shaft length. Longer motor shafts are possible, please contact alpha.
3) The dimensions depend on the motor
4) Smaller motor shaft diameter is compensated by a bushing with a minimum thickness of 1 mm
5) Standard clamping hub diameter

SPK+ 180 MF 3-stage

				3-stage													
Ratio			*i*	**64**	**84**	**100**	**125**	**140**	**175**	**200**	**250**	**280**	**350**	**400**	**500**	**700**	**1000**
Max. torque [a) b) e)]			T_{2a}	*Nm*	1440	1440	1800	1800	1800	1800	1800	1800	1936	1936	840	1050	1470	1552
				in.lb	12745	12745	15931	15931	15931	15931	15931	15931	17135	17135	7435	9293	13011	13736
Max. acceleration torque [b) e)] (max. 1000 cycles per hour)			T_{2B}	*Nm*	1200	1200	1452	1452	1452	1452	1452	1452	1452	1452	840	1050	1452	1164
				in.lb	10621	10621	12851	12851	12851	12851	12851	12851	12851	12851	7435	9293	12851	10302
Nominal torque (at n_{1N})			T_{2N}	*Nm*	750	750	750	750	750	750	750	750	750	750	640	750	750	750
				in.lb	6638	6638	6638	6638	6638	6638	6638	6638	6638	6638	5665	6638	6638	6638
Emergency stop torque [a) b) e)] (permitted 1000 times during the service life of the gearbox)			T_{2Not}	*Nm*	2000	1600	2500	2500	2500	2500	2500	2500	2750	2750	1600	2000	2750	2750
				in.lb	17702	14161	22127	22127	22127	22127	22127	22127	24340	24340	14161	17702	24340	24340
Permitted average input speed (at T_{2N} and 20 °C ambient temperature) [d)]			n_{1N}	n_{1T}	2900	2900	2900	2900	2900	2900	2900	3200	2900	3200	3900	3900	3900	3900
Max. input speed			n_{1Max}	*rpm*	4500	4500	4500	4500	4500	4500	4500	4500	4500	4500	4500	4500	4500	4500
Mean no load running torque [b)] (at n_1 = 3000 rpm and 20 °C gearbox temperature)			T_{012}	*Nm*	1	0.5	0.8	0.6	0.6	0.5	0.5	0.4	0.5	0.4	0.4	0.4	0.4	0.4
				in.lb	9	4	7	5	5	4	4	4	4	4	4	4	4	4
Max. backlash			j_t	*arcmin*	Standard ≤ 4 / Reduced ≤ 2													
Torsional rigidity [b)]			C_{t21}	*Nm/arcmin*	175	175	175	175	175	175	175	175	175	175	175	175	175	175
				in.lb/arcmin	1549	1549	1549	1549	1549	1549	1549	1549	1549	1549	1549	1549	1549	1549
Max. axial force [c)]			F_{2AMax}	*N*	15570													
				lb_f	3503													
Max. lateral force [c)]			F_{2QMax}	*N*	15400													
				lb_f	3465													
Max. tilting moment			M_{2KMax}	*Nm*	1600													
				in.lb	14161													
Efficiency at full load			η	%	92													
Service life			L_h	*h*	> 20000													
Weight (incl. standard adapter plate)			*m*	*kg*	47.4													
				lb_m	105													
Operating noise (at reference ratio and reference speed – ratio-specific values available in cymex®)			L_{PA}	*dB(A)*	≤ 70													
Max. permitted housing temperature				*°C*	+90													
				F	194													
Ambient temperature				*°C*	0 to +40													
				F	32 to 104													
Lubrication					Lubricated for life													
Direction of rotation					In- and output opposite direction													
Protection class					IP 65													
Metal bellows coupling (recommended product type – validate sizing with cymex®)					BC2 - 01500AA - 055.000 - X													
Bore diameter of coupling on the application side				*mm*	X = 050.000 - 080.000													
Mass moment of inertia (relates to the drive) Clamping hub diameter [mm]	G	24	J_1	$kgcm^2$	3.97	2.82	3.36	3.22	2.82	2.75	2.5	2.47	2.5	2.44	2.42	2.42	2.42	2.42
				10^{-3} $in.lb.s^2$	3.51	2.5	2.97	2.85	2.5	2.43	2.21	2.19	2.21	2.16	2.14	2.14	2.14	2.14
	K	38	J_1	$kgcm^2$	10.9	9.74	10.3	10.1	9.74	9.66	9.41	9.38	9.41	9.38	9.33	9.33	9.33	9.33
				10^{-3} $in.lb.s^2$	9.65	8.62	9.12	8.94	8.62	8.55	8.33	8.3	8.33	8.3	8.26	8.26	8.26	8.26

Please use our sizing software cymex® for a detailed sizing – **www.wittenstein-cymex.com**
Please contact us for optimum sizing at S1 conditions (Continuous operation).

[a)] At max. 10 % F_{2QMax}
[b)] Valid for standard clamping hub diameter
[c)] Refers to center of the output shaft or flange
[d)] Please reduce input speed at higher ambient temperatures
[e)] Smooth shaft

View A

Motor shaft diameter [mm]

3-stage

up to 24/38 [4] (G[5]/K) clamping hub diameter

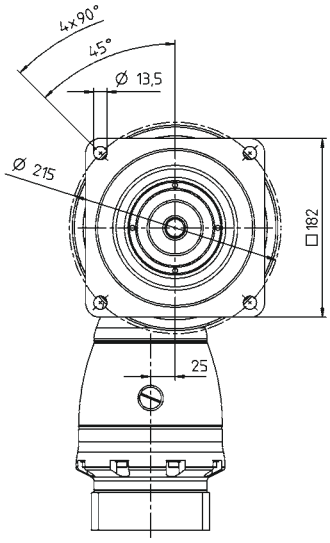

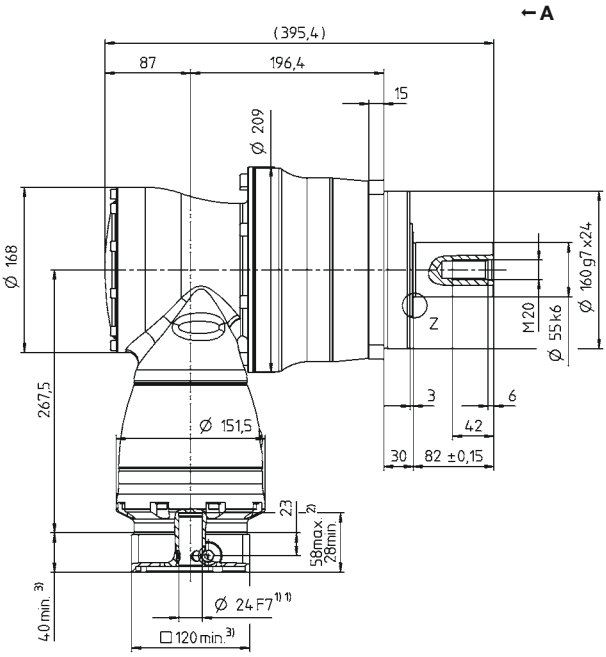

Hypoid gearboxes

SPK[+]

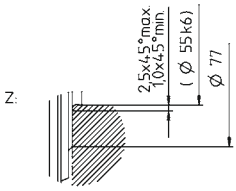

Other output variants

Shaft with key

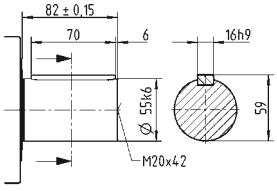

Splined shaft (DIN 5480)

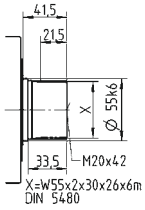

Shaft mounted

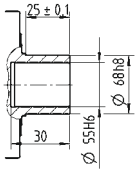

See technical data sheet for available clamping hub diameters (mass moment of inertia). Dimensions available on request.

Non-tolerated dimensions are nominal dimensions

1) Check motor shaft fit
2) Min./Max. permissible motor shaft length. Longer motor shafts are possible, please contact alpha.
3) The dimensions depend on the motor
4) Smaller motor shaft diameter is compensated by a bushing with a minimum thickness of 1 mm
5) Standard clamping hub diameter

SPK+ 210 MF 2-stage

			2-stage									
Ratio	*i*		**12**	**16**	**20**	**25**	**28**	**35**	**40**	**50**	**70**	**100**
Max. torque [a) b) e)]	T_{2a}	*Nm*	3072	3072	3840	3840	3840	3840	1880	2350	3290	2800
		in.lb	27190	27190	33987	33987	33987	33987	16640	20799	29119	24782
Max. acceleration torque [b) e)] (max. 1000 cycles per hour)	T_{2B}	*Nm*	2560	2560	3000	3000	2880	2880	1880	2350	2880	2280
		in.lb	22658	22658	26552	26552	25490	25490	16640	20799	25490	20180
Nominal torque (at n_{1N})	T_{2N}	*Nm*	1500	1500	1500	1500	1400	1500	1400	1500	1400	1000
		in.lb	13276	13276	13276	13276	12391	13276	12391	13276	12391	8851
Emergency stop torque [a) b) e)] (permitted 1000 times during the service life of the gearbox)	T_{2Not}	*Nm*	3600	4200	5250	5250	5900	5900	3600	4500	5900	5900
		in.lb	31863	37173	46467	46467	52220	52220	31863	39829	52220	52220
Permitted average input speed (at T_{2N} and 20 °C ambient temperature) [d)]	n_{1N}	n_{1T}	1500	1700	1700	1900	1700	1900	1700	1700	1700	1700
Max. input speed	n_{1Max}	*rpm*	4500	4500	4500	4500	4500	4500	4500	4500	4500	4500
Mean no load running torque [b)] (at n_1 = 3000 rpm and 20 °C gearbox temperature)	T_{012}	*Nm*	18.5	17	15	13	14	12	15	15	14	13
		in.lb	164	150	133	115	124	106	133	133	124	115
Max. backlash	j_t	*arcmin*	Standard ≤ 4 / Reduced ≤ 2									
Torsional rigidity [b)]	C_{t21}	*Nm/arcmin*	300	300	300	300	300	300	300	300	300	300
		in.lb/arcmin	2655	2655	2655	2655	2655	2655	2655	2655	2655	2655
Max. axial force [c)]	F_{2AMax}	*N*	30000									
		lb_f	6750									
Max. lateral force [c)]	F_{2QMax}	*N*	21000									
		lb_f	4725									
Max. tilting moment	M_{2KMax}	*Nm*	3100									
		in.lb	27437									
Efficiency at full load	η	%	94									
Service life	L_h	*h*	> 20000									
Weight (incl. standard adapter plate)	*m*	*kg*	82									
		lb_m	181									
Operating noise (at reference ratio and reference speed – ratio-specific values available in cymex®)	L_{PA}	*dB(A)*	≤ 71									
Max. permitted housing temperature		°C	+90									
		F	194									
Ambient temperature		°C	0 to +40									
		F	32 to 104									
Lubrication			Lubricated for life									
Direction of rotation			In- and output opposite direction									
Protection class			IP 65									
Metal bellows coupling (recommended product type – validate sizing with cymex®)			BC2 - 04000AA - 075.000 - X									
Bore diameter of coupling on the application side		*mm*	X = 050.000 - 090.000									
Mass moment of inertia (relates to the drive) **M 48** Clamping hub diameter [mm]	J_1	$kgcm^2$	78.8	54.6	53	43.4	51.5	42.2	30.2	30	29.8	29.8
		10^{-3} $in.lb.s^2$	69.74	48.32	46.91	38.41	45.58	37.35	26.73	26.55	26.37	26.37

Please use our sizing software cymex® for a detailed sizing – **www.wittenstein-cymex.com**
Please contact us for optimum sizing at S1 conditions (Continuous operation).

[a)] At max. 10 % F_{2QMax}
[b)] Valid for standard clamping hub diameter
[c)] Refers to center of the output shaft or flange
[d)] Please reduce input speed at higher ambient temperatures
[e)] Smooth shaft

View A

Motor shaft diameter [mm]

2-stage

up to 48 [4] (M)[5] clamping hub diameter

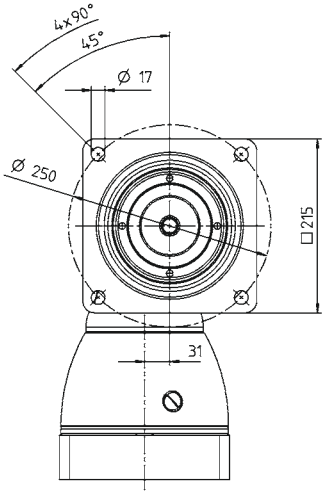

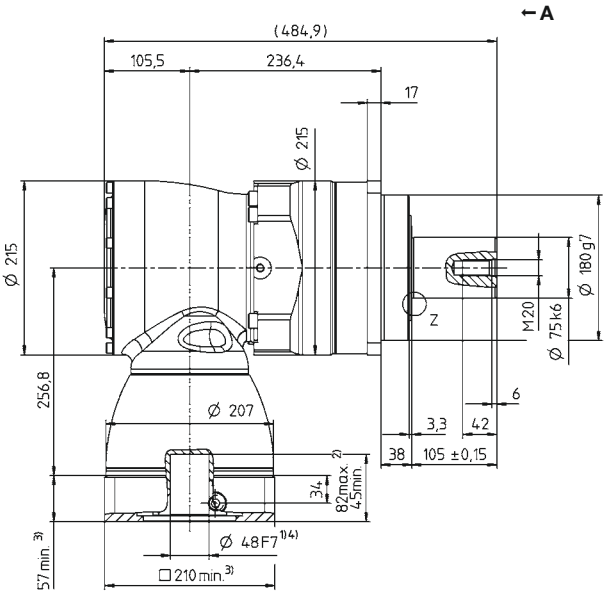

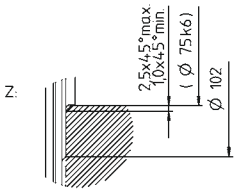

Other output variants

Shaft with key

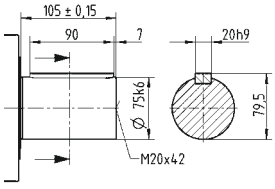

Splined shaft (DIN 5480)

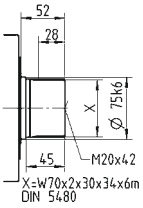

See technical data sheet for available clamping hub diameters (mass moment of inertia). Dimensions available on request.

Non-tolerated dimensions are nominal dimensions

1) Check motor shaft fit
2) Min. / Max. permissible motor shaft length. Longer motor shafts are possible, please contact alpha.
3) The dimensions depend on the motor
4) Smaller motor shaft diameter is compensated by a bushing with a minimum thickness of 1 mm
5) Standard clamping hub diameter

			3-stage													
Ratio	i		**64**	**84**	**100**	**125**	**140**	**175**	**200**	**250**	**280**	**350**	**400**	**500**	**700**	**1000**
Max. torque [a) b) e)]	T_{2a}	*Nm*	3072	3072	3840	3840	3840	3840	3840	3840	3840	3840	1880	2350	3290	2800
		in.lb	27190	27190	33987	33987	33987	33987	33987	33987	33987	33987	16640	20799	29119	24782
Max. acceleration torque [b) e)] (max. 1000 cycles per hour)	T_{2B}	*Nm*	2560	2560	3000	3000	3000	3000	3000	3000	2880	2880	1880	2350	2880	2280
		in.lb	22658	22658	26552	26552	26552	26552	26552	26552	25490	25490	16640	20799	25490	20180
Nominal torque (at n_{1N})	T_{2N}	*Nm*	1500	1500	1500	1500	1500	1500	1500	1500	1400	1400	1500	1500	1400	1000
		in.lb	13276	13276	13276	13276	13276	13276	13276	13276	12391	12391	13276	13276	12391	8851
Emergency stop torque [a) b) e)] (permitted 1000 times during the service life of the gearbox)	T_{2Not}	*Nm*	4200	3600	5250	5250	5250	5250	5250	5250	5900	5900	3600	4500	5900	5900
		in.lb	37173	31863	46467	46467	46467	46467	46467	46467	52220	52220	31863	39829	52220	52220
Permitted average input speed (at T_{2N} and 20 °C ambient temperature) [d)]	n_{1N}	n_{1T}	2700	2700	2700	2700	2700	2700	2700	2900	2700	2900	3400	3400	3400	3400
Max. input speed	n_{1Max}	*rpm*	4000	4000	4000	4000	4000	4000	4000	4000	4000	4000	4000	4000	4000	4000
Mean no load running torque [b)] (at n_1 = 3000 rpm and 20 °C gearbox temperature)	T_{012}	*Nm*	2.4	1.2	1.9	1.7	1.3	1.3	1	1	1	1	1	1	1	1
		in.lb	21	11	17	15	12	12	9	9	9	9	9	9	9	9
Max. backlash	j_t	*arcmin*	Standard ≤ 4 / Reduced ≤ 2													
Torsional rigidity [b)]	C_{t21}	*Nm/arcmin*	300	300	300	300	300	300	300	300	300	300	300	300	300	300
		in.lb/arcmin	2655	2655	2655	2655	2655	2655	2655	2655	2655	2655	2655	2655	2655	2655
Max. axial force [c)]	F_{2AMax}	*N*	30000													
		lb_f	6750													
Max. lateral force [c)]	F_{2QMax}	*N*	21000													
		lb_f	4725													
Max. tilting moment	M_{2KMax}	*Nm*	3100													
		in.lb	27437													
Efficiency at full load	η	%	92													
Service life	L_h	*h*	> 20000													
Weight (incl. standard adapter plate)	*m*	*kg*	86													
		lb_m	190													
Operating noise (at reference ratio and reference speed – ratio-specific values available in cymex®)	L_{PA}	*dB(A)*	≤ 71													
Max. permitted housing temperature		*°C*	+90													
		F	194													
Ambient temperature		*°C*	0 to +40													
		F	32 to 104													
Lubrication			Lubricated for life													
Direction of rotation			In- and output opposite direction													
Protection class			IP 65													
Metal bellows coupling (recommended product type – validate sizing with cymex®)			BC2 - 04000AA - 075.000 - X													
Bore diameter of coupling on the application side		*mm*	X = 050.000 - 090.000													
Mass moment of inertia (relates to the drive) — Clamping hub diameter [mm]: K 38	J_1	*kgcm²*	14	10.9	12.3	12	10.9	10.7	10.1	10	10.1	10	9.9	9.9	9.9	9.9
		10^{-3} in.lb.s²	12.39	9.65	10.89	10.62	9.65	9.47	8.94	8.85	8.94	8.85	8.76	8.76	8.76	8.76
Clamping hub diameter [mm]: M 48	J_1	*kgcm²*	28.7	25.6	27.1	26.7	267	25.6	24.8	24.7	24.8	24.7	24.6	24.6	24.6	24.6
		10^{-3} in.lb.s²	25.4	22.66	23.98	23.63	236.3	22.66	21.95	21.86	21.95	21.86	21.77	21.77	21.77	21.77

Please use our sizing software cymex® for a detailed sizing – **www.wittenstein-cymex.com**
Please contact us for optimum sizing at S1 conditions (Continuous operation).

a) At max. 10 % F_{2QMax}
b) Valid for standard clamping hub diameter
c) Refers to center of the output shaft or flange
d) Please reduce input speed at higher ambient temperatures
e) Smooth shaft

View A

Motor shaft diameter [mm]

3-stage

up to 38/48 [4] (K[5]/M) clamping hub diameter

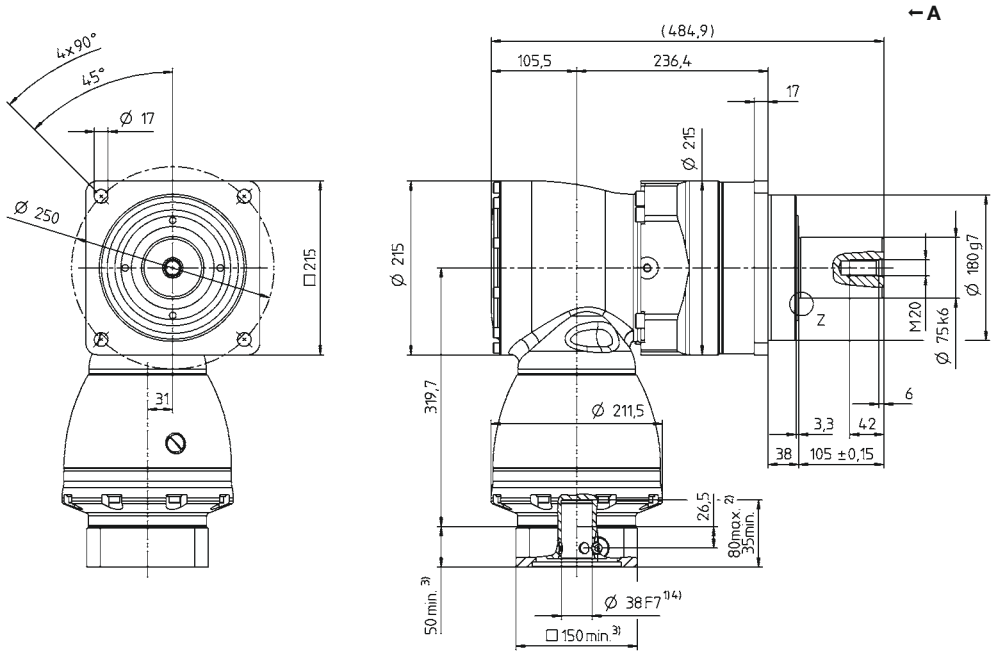

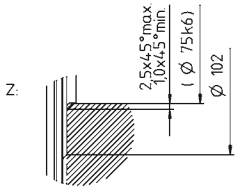

Other output variants

Shaft with key

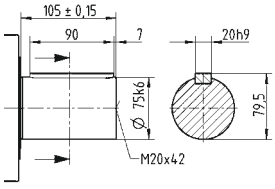

Splined shaft (DIN 5480)

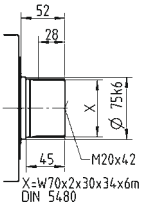

See technical data sheet for available clamping hub diameters (mass moment of inertia). Dimensions available on request.

Non-tolerated dimensions are nominal dimensions

1) Check motor shaft fit
2) Min./Max. permissible motor shaft length. Longer motor shafts are possible, please contact alpha.
3) The dimensions depend on the motor
4) Smaller motor shaft diameter is compensated by a bushing with a minimum thickness of 1 mm
5) Standard clamping hub diameter

SPK+ 240 MF 3-stage

			3-stage													
Ratio	*i*		**48**	**64**	**100**	**125**	**140**	**175**	**200**	**250**	**280**	**350**	**400**	**500**	**700**	**1000**
Max. torque [a) b) e)]	T_{2a}	*Nm*	5446	5446	5446	5700	5000	5700	4200	5250	5446	5700	5446	5700	5700	3642
		in.lb	48201	48201	48201	50450	44254	50450	37173	46467	48201	50450	48201	50450	50450	32235
Max. acceleration torque [b) e)] (max. 1000 cycles per hour)	T_{2B}	*Nm*	4800	4800	5400	5400	5000	5400	4200	5250	5400	5400	4400	5160	4730	3642
		in.lb	42484	42484	47794	47794	44254	47794	37173	46467	47794	47794	38944	45670	41864	32235
Nominal torque (at n_{1N})	T_{2N}	*Nm*	2500	2500	2500	2500	2500	2500	2500	2500	2500	2500	2500	2500	2300	1700
		in.lb	22127	22127	22127	22127	22127	22127	22127	22127	22127	22127	22127	22127	20357	15046
Emergency stop torque [a) b) e)] (permitted 1000 times during the service life of the gearbox)	T_{2Not}	*Nm*	6400	8000	8500	8500	8500	8500	8000	8500	8500	8500	8500	8500	8500	6850
		in.lb	56645	70806	75232	75232	75232	75232	70806	75232	75232	75232	75232	75232	75232	60628
Permitted average input speed (at T_{2N} and 20 °C ambient temperature) [d)]	n_{1N}	n_{1T}	1800	1900	1900	2100	1900	2100	2100	2100	2100	2100	2100	2100	2100	2100
Max. input speed	n_{1Max}	*rpm*	5000	5000	5000	5000	5000	5000	5000	5000	5000	5000	5000	5000	5000	5000
Mean no load running torque [b)] (at n_1 = 3000 rpm and 20 °C gearbox temperature)	T_{012}	*Nm*	11	8	7	7	8	8	7	6	6	6	6	6	6	6
		in.lb	97	71	62	62	71	71	62	53	53	53	53	53	53	53
Max. backlash	j_t	*arcmin*	Standard ≤ 5.5 / Reduced ≤ 3.5													
Torsional rigidity [b)]	C_{t21}	*Nm/arcmin*	510	510	510	510	510	510	510	510	510	510	510	510	510	510
		in.lb/arcmin	4514	4514	4514	4514	4514	4514	4514	4514	4514	4514	4514	4514	4514	4514
Max. axial force [c)]	F_{2AMax}	*N*	33000													
		lb_f	7425													
Max. lateral force [c)]	F_{2QMax}	*N*	30000													
		lb_f	6750													
Max. tilting moment	M_{2KMax}	*Nm*	5000													
		in.lb	44254													
Efficiency at full load	η	%	92													
Service life	L_h	*h*	> 20000													
Weight (incl. standard adapter plate)	*m*	*kg*	93													
		lb_m	206													
Operating noise (at reference ratio and reference speed – ratio-specific values available in cymex®)	L_{PA}	*dB(A)*	≤ 71													
Max. permitted housing temperature		°C	+90													
		F	194													
Ambient temperature		°C	0 to +40													
		F	32 to 104													
Lubrication			Lubricated for life													
Direction of rotation			In- and output opposite direction													
Protection class			IP 65													
Metal bellows coupling (recommended product type – validate sizing with cymex®)			BC2 - 06000AA - 085.000 - X													
Bore diameter of coupling on the application side		*mm*	X = 060.000 - 140.000													
Mass moment of inertia (relates to the drive) K 38 Clamping hub diameter [mm]	J_1	$kgcm^2$	26.5	20	17	17	15	15	13	13	13	13	13	13	13	13
		10^{-3} *in.lb.s²*	23.45	17.7	15.05	15.05	13.28	13.28	11.51	11.51	11.51	11.51	11.51	11.51	11.51	11.51

Please use our sizing software cymex® for a detailed sizing – **www.wittenstein-cymex.com**
Please contact us for optimum sizing at S1 conditions (Continuous operation).

[a)] At max. 10 % F_{2QMax}
[b)] Valid for standard clamping hub diameter
[c)] Refers to center of the output shaft or flange
[d)] Please reduce input speed at higher ambient temperatures
[e)] Smooth shaft

View A

Motor shaft diameter [mm]

3-stage

up to 38 [4] (K)[5] clamping hub diameter

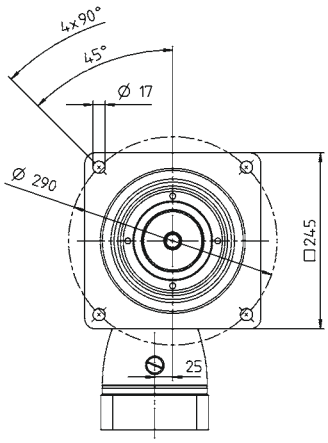

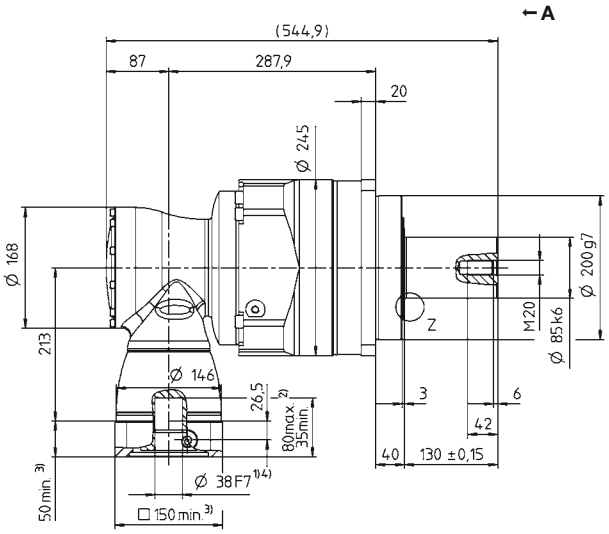

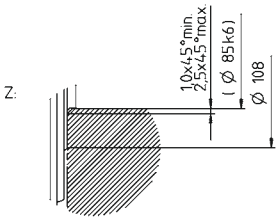

Other output variants

Shaft with key

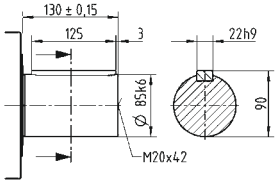

Splined shaft (DIN 5480)

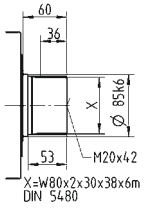

See technical data sheet for available clamping hub diameters (mass moment of inertia). Dimensions available on request.

Non-tolerated dimensions are nominal dimensions

1) Check motor shaft fit
2) Min. / Max. permissible motor shaft length. Longer motor shafts are possible, please contact alpha.
3) The dimensions depend on the motor
4) Smaller motor shaft diameter is compensated by a bushing with a minimum thickness of 1 mm
5) Standard clamping hub diameter

SPK+ 240 MF 4-stage i=144-1000

				4-stage												
Ratio			*i*	**144**	**192**	**256**	**300**	**375**	**420**	**500**	**560**	**600**	**700**	**800**	**875**	**1000**
Max. torque [a) b) e)]			T_{2a}	*Nm*	5446	5446	5446	5446	5700	5446	5446	5446	5446	5446	5446	5700	5446
				in.lb	48201	48201	48201	48201	50450	48201	48201	48201	48201	48201	48201	50450	48201
Max. acceleration torque [b) e)] (max. 1000 cycles per hour)			T_{2B}	*Nm*	4800	4800	4800	5400	5400	5400	5400	5400	5400	5400	5400	5400	5400
				in.lb	42484	42484	42484	47794	47794	47794	47794	47794	47794	47794	47794	47794	47794
Nominal torque (at n_{1N})			T_{2N}	*Nm*	2500	2500	2500	2500	2500	2500	2500	2500	2500	2500	2500	2500	2500
				in.lb	22127	22127	22127	22127	22127	22127	22127	22127	22127	22127	22127	22127	22127
Emergency stop torque [a) b) e)] (permitted 1000 times during the service life of the gearbox)			T_{2Not}	*Nm*	6400	6400	8000	8000	8500	8000	8500	8500	8000	8500	8500	8500	8500
				in.lb	56645	56645	70806	70806	75232	70806	75232	75232	70806	75232	75232	75232	75232
Permitted average input speed (at T_{2N} and 20 °C ambient temperature) [d)]			n_{1N}	n_{1T}	2700	2900	2900	2900	2900	2900	2900	2900	2900	2900	2900	2900	3200
Max. input speed			n_{1Max}	*rpm*	4500	4500	4500	4500	4500	4500	4500	4500	4500	4500	4500	4500	4500
Mean no load running torque [b)] (at n_1 = 3000 rpm and 20 °C gearbox temperature)			T_{012}	*Nm*	3.2	2.3	1.6	1.3	0.7	0.9	0.9	0.8	0.7	0.7	0.6	0.6	0.5
				in.lb	28	20	14	12	6	8	8	7	6	6	5	5	4
Max. backlash			j_t	*arcmin*	Standard ≤ 5.5 / Reduced ≤ 3.5												
Torsional rigidity [b)]			C_{t21}	*Nm/arcmin*	510	510	510	510	510	510	510	510	510	510	510	510	510
				in.lb/arcmin	4514	4514	4514	4514	4514	4514	4514	4514	4514	4514	4514	4514	4514
Max. axial force [c)]			F_{2AMax}	*N*	33000												
				lb_f	7425												
Max. lateral force [c)]			F_{2QMax}	*N*	30000												
				lb_f	6750												
Max. tilting moment			M_{2KMax}	*Nm*	5000												
				in.lb	44254												
Efficiency at full load			η	%	90												
Service life			L_h	*h*	> 20000												
Weight (incl. standard adapter plate)			*m*	*kg*	96												
				lb_m	212												
Operating noise (at reference ratio and reference speed – ratio-specific values available in cymex®)			L_{PA}	*dB(A)*	≤ 71												
Max. permitted housing temperature				°C	+90												
				F	194												
Ambient temperature				°C	0 to +40												
				F	32 to 104												
Lubrication					Lubricated for life												
Direction of rotation					In- and output opposite direction												
Protection class					IP 65												
Metal bellows coupling (recommended product type – validate sizing with cymex®)					BC2 - 06000AA - 085.000 - X												
Bore diameter of coupling on the application side				*mm*	X = 060.000 - 140.000												
Mass moment of inertia (relates to the drive) Clamping hub diameter [mm]	G	24	J_1	$kgcm^2$	5.96	4.3	3.9	3.32	3.31	2.8	3.18	2.8	2.49	2.73	2.49	2.73	2.46
				10^{-3} $in.lb.s^2$	5.27	3.81	3.45	2.94	2.93	2.48	2.81	2.48	2.2	2.42	2.2	2.42	2.18
	K	38	J_1	$kgcm^2$	12.87	11.19	10.81	10.23	10.22	9.72	10.09	9.71	9.4	9.65	9.4	9.65	9.37
				10^{-3} $in.lb.s^2$	11.39	9.9	9.57	9.05	9.04	8.6	8.93	8.59	8.32	8.54	8.32	8.54	8.29

Please use our sizing software cymex® for a detailed sizing – **www.wittenstein-cymex.com**
Please contact us for optimum sizing at S1 conditions (Continuous operation).

a) At max. 10 % F_{2QMax}
b) Valid for standard clamping hub diameter
c) Refers to center of the output shaft or flange
d) Please reduce input speed at higher ambient temperatures
e) Smooth shaft

View A

Motor shaft diameter [mm]

4-stage

up to 24/38 [4] (G[5]/K) clamping hub diameter

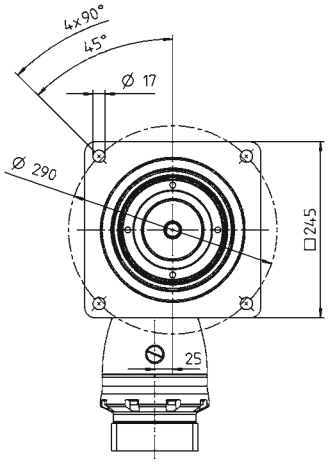

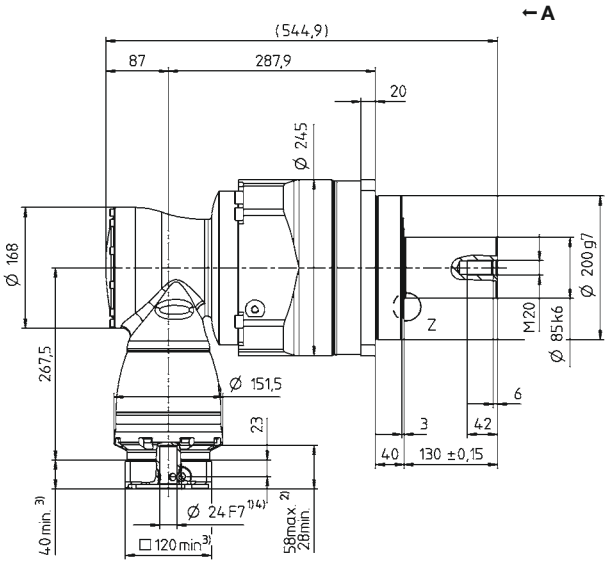

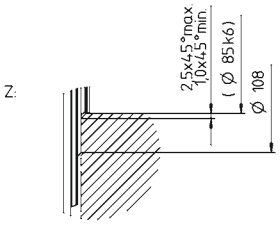

Other output variants

Shaft with key

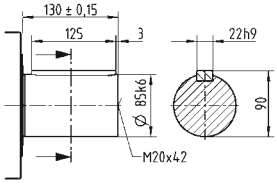

Splined shaft (DIN 5480)

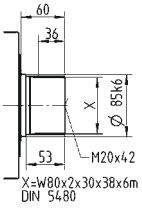

See technical data sheet for available clamping hub diameters (mass moment of inertia). Dimensions available on request.

Non-tolerated dimensions are nominal dimensions

1) Check motor shaft fit
2) Min./Max. permissible motor shaft length. Longer motor shafts are possible, please contact alpha.
3) The dimensions depend on the motor
4) Smaller motor shaft diameter is compensated by a bushing with a minimum thickness of 1 mm
5) Standard clamping hub diameter

SPK+ 240 MF 4-stage i=1225-10000

				4-stage								
Ratio			*i*	**1225**	**1400**	**1750**	**2000**	**2800**	**3500**	**5000**	**7000**	**10000**
Max. torque [a) b) e)]			T_{2a}	*Nm*	5700	5700	5700	4200	5446	5700	5700	5700	3642
				in.lb	50450	50450	50450	37173	48201	50450	50450	50450	32235
Max. acceleration torque [b) e)] (max. 1000 cycles per hour)			T_{2B}	*Nm*	5400	5400	5400	4200	5400	5400	5160	4730	3642
				in.lb	47794	47794	47794	37173	47794	47794	45670	41864	32235
Nominal torque (at n_{1N})			T_{2N}	*Nm*	2500	2500	2500	2500	2500	2500	2500	2300	1700
				in.lb	22127	22127	22127	22127	22127	22127	22127	20357	15046
Emergency stop torque [a) b) e)] (permitted 1000 times during the service life of the gearbox)			T_{2Not}	*Nm*	8500	8500	8500	8000	8500	8500	8500	8500	6850
				in.lb	75232	75232	75232	70806	75232	75232	75232	75232	60628
Permitted average input speed (at T_{2N} and 20 °C ambient temperature) [d)]			n_{1N}	n_{1T}	2900	2900	3200	3900	3900	3900	3900	3900	3900
Max. input speed			n_{1Max}	*rpm*	4500	4500	4500	4500	4500	4500	4500	4500	4500
Mean no load running torque [b)] (at n_1 = 3000 rpm and 20 °C gearbox temperature)			T_{012}	*Nm*	0.6	0.6	0.4	0.4	0.4	0.4	0.4	0.3	0.3
				in.lb	5	5	4	4	4	4	4	3	3
Max. backlash			j_t	*arcmin*	Standard ≤ 5.5 / Reduced ≤ 3.5								
Torsional rigidity [b)]			C_{t21}	*Nm/arcmin*	510	510	510	510	510	510	510	510	510
				in.lb/arcmin	4514	4514	4514	4514	4514	4514	4514	4514	4514
Max. axial force [c)]			F_{2AMax}	*N*	33000								
				lb_f	7425								
Max. lateral force [c)]			F_{2QMax}	*N*	30000								
				lb_f	6750								
Max. tilting moment			M_{2KMax}	*Nm*	5000								
				in.lb	44254								
Efficiency at full load			η	%	90								
Service life			L_h	*h*	> 20000								
Weight (incl. standard adapter plate)			*m*	*kg*	96								
				lb_m	212								
Operating noise (at reference ratio and reference speed – ratio-specific values available in cymex®)			L_{PA}	*dB(A)*	≤ 71								
Max. permitted housing temperature				*°C*	+90								
				F	194								
Ambient temperature				*°C*	0 to +40								
				F	32 to 104								
Lubrication					Lubricated for life								
Direction of rotation					In- and output opposite direction								
Protection class					IP 65								
Metal bellows coupling (recommended product type – validate sizing with cymex®)					BC2 - 06000AA - 085.000 - X								
Bore diameter of coupling on the application side				*mm*	X = 060.000 - 140.000								
Mass moment of inertia (relates to the drive) Clamping hub diameter [mm]	G	24	J_1	$kgcm^2$	2.73	2.49	2.46	2.42	2.42	2.42	2.42	2.42	2.42
				10^{-3} $in.lb.s^2$	2.42	2.2	2.18	2.14	2.14	2.14	2.14	2.14	2.14
	K	38	J_1	$kgcm^2$	9.64	9.4	9.37	9.33	9.33	9.33	9.33	9.33	9.33
				10^{-3} $in.lb.s^2$	8.53	8.32	8.29	8.26	8.26	8.26	8.26	8.26	8.26

Please use our sizing software cymex® for a detailed sizing – **www.wittenstein-cymex.com**
Please contact us for optimum sizing at S1 conditions (Continuous operation).

[a)] At max. 10 % F_{2QMax}
[b)] Valid for standard clamping hub diameter
[c)] Refers to center of the output shaft or flange
[d)] Please reduce input speed at higher ambient temperatures
[e)] Smooth shaft

View A

Motor shaft diameter [mm]

4-stage

up to 24/38 [4] (G[5]/K) clamping hub diameter

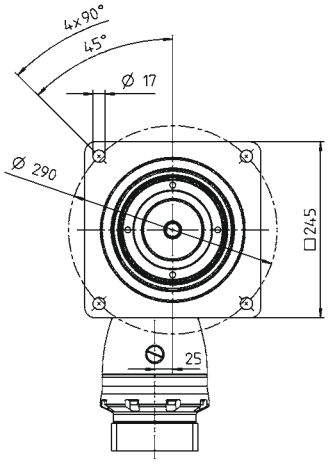

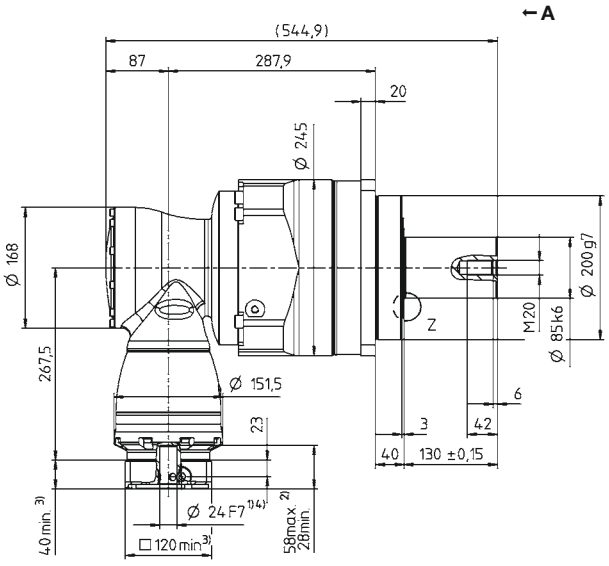

Z:

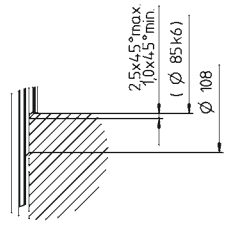

Other output variants

Shaft with key

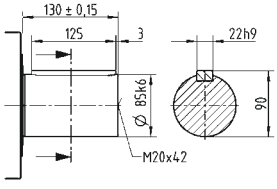

Splined shaft (DIN 5480)

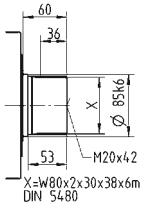

See technical data sheet for available clamping hub diameters (mass moment of inertia). Dimensions available on request.

Non-tolerated dimensions are nominal dimensions

1) Check motor shaft fit
2) Min./Max. permissible motor shaft length. Longer motor shafts are possible, please contact alpha.
3) The dimensions depend on the motor
4) Smaller motor shaft diameter is compensated by a bushing with a minimum thickness of 1 mm
5) Standard clamping hub diameter

TK+ / TPK+ / TPK+ HIGH TORQUE – Space-saving right-angle precision with output flange

The versatile hypoid gearbox with TP+ compatible output flange and hollow shaft. TPK+ / TPK+ HIGH TORQUE gearboxes with planetary stage are especially suitable for high-precision applications requiring higher power and torsional rigidity.

Product highlights

Max. torsional backlash
TK+ ≤ 4 arcmin (Standard)
TPK+ ≤ 4 arcmin (Standard)
≤ 2 arcmin (Reduced)
TPK+ HIGH TORQUE ≤ 1.3 arcmin (Standard)

Diverse range of ratios i = 3 – 10,000

High torque capacity (MA)

Flexibility thanks to various types of output shapes
Also available in hollow shaft version

Other gearbox models
Corrosion resistant design, ATEX (TK+)

The TK+ / TPK+ / TK+ HIGH TORQUE compared to the industry standard

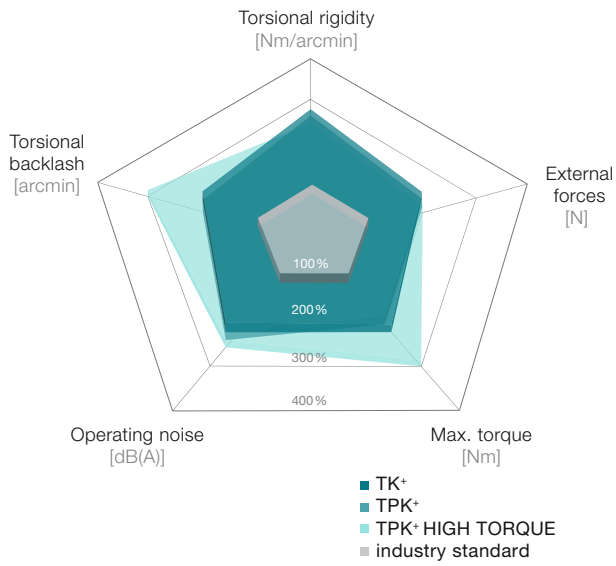

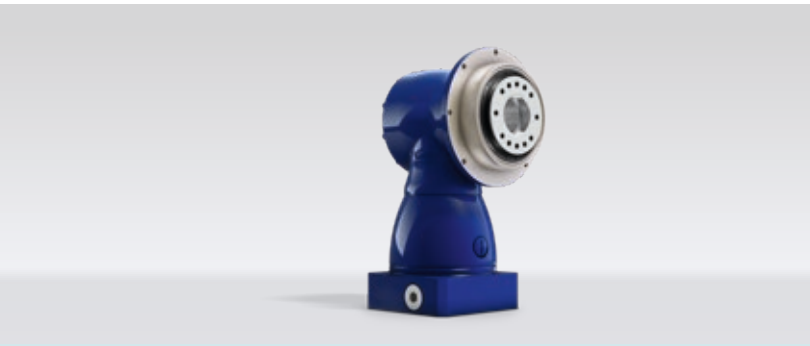

TK+ in corrosion-resistant design

TPK+ with rack and pinion

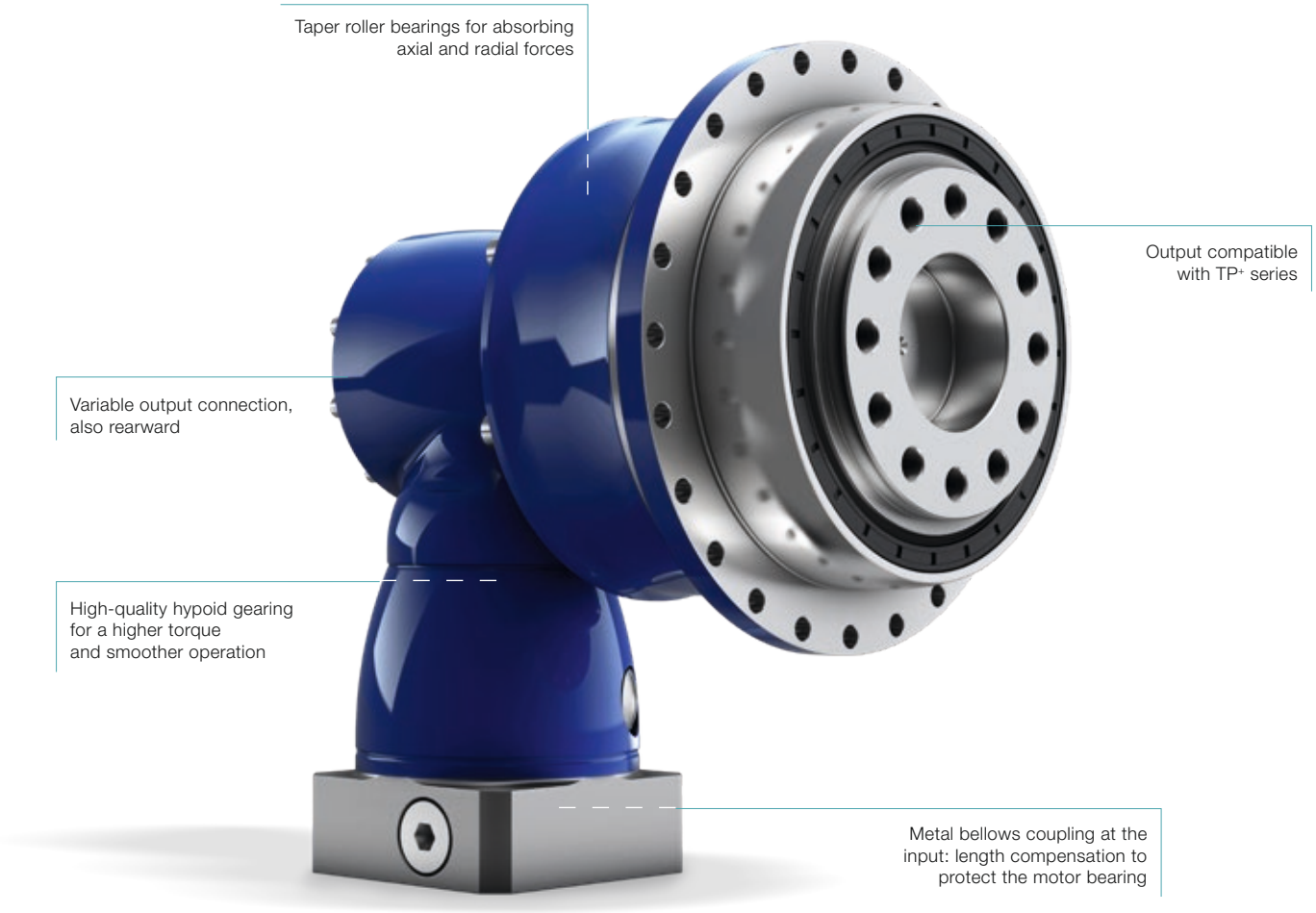

TPK+ HIGH TORQUE

TK+ with metal bellows coupling

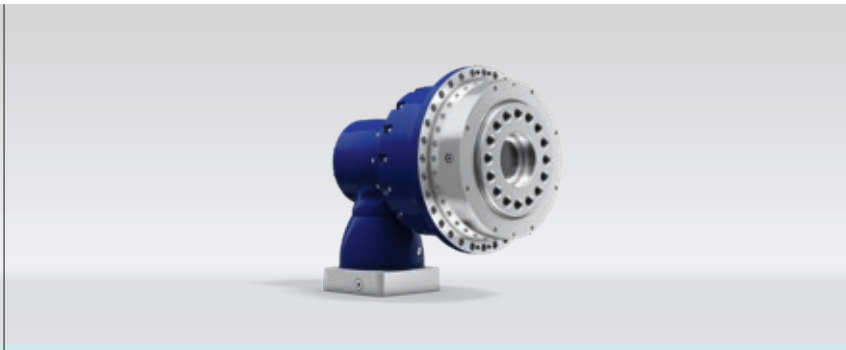

TPK+ 2000 / 4000 available on request

TK+ 004 MF 1-/2-stage

				1-stage					2-stage									
Ratio			*i*	**3**	**4**	**5**	**7**	**10**	**12**	**16**	**20**	**25**	**28**	**35**	**40**	**50**	**70**	**100**
Max. torque [a) b)]			T_{2a}	*Nm*	36	36	36	25	20	36	36	36	36	36	36	36	36	25	20
				in.lb	319	319	319	221	177	319	319	319	319	319	319	319	319	221	177
Max. acceleration torque [b)] (max. 1000 cycles per hour)			T_{2B}	*Nm*	30	30	30	25	20	30	30	30	30	30	30	30	30	25	20
				in.lb	266	266	266	221	177	266	266	266	266	266	266	266	266	221	177
Nominal torque (at n_{1N})			T_{2N}	*Nm*	22	22	22	20	15	22	22	22	22	22	22	22	22	20	15
				in.lb	195	195	195	177	133	195	195	195	195	195	195	195	195	177	133
Emergency stop torque [a) b)] (permitted 1000 times during the service life of the gearbox)			T_{2Not}	*Nm*	40	50	50	45	40	50	50	50	50	50	50	50	50	45	40
				in.lb	354	443	443	398	354	443	443	443	443	443	443	443	443	398	354
Permitted average input speed (at T_{2N} and 20 °C ambient temperature) [d)]			n_{1N}	n_{1T}	2200	2400	2700	2700	2700	4400	4400	4400	4400	4400	4400	4400	4800	5500	5500
Max. input speed			n_{1Max}	*rpm*	7500	7500	7500	7500	7500	6000	6000	6000	6000	6000	6000	6000	6000	6000	6000
Mean no load running torque [b)] (at n_1 = 3000 rpm and 20 °C gearbox temperature)			T_{012}	*Nm*	1.4	1.3	1.2	1.4	1.3	0.2	0.2	0.2	0.2	0.2	0.2	0.1	0.1	0.1	0.1
				in.lb	12	12	11	12	12	2	2	2	2	2	2	1	1	1	1
Max. backlash			j_t	*arcmin*	Standard ≤ 5														
Torsional rigidity [b)]			C_{t21}	*Nm/arcmin*	2.6	2.8	3	2.6	2.3	2.8	2.8	2.8	2.8	2.8	2.8	2.8	3	2.6	2.3
				in.lb/arcmin	23	25	27	23	20	25	25	25	25	25	25	25	27	23	20
Max. axial force [c)]			F_{2AMax}	*N*	2400														
				lb_f	540														
Max. tilting moment			M_{2KMax}	*Nm*	251														
				in.lb	2222														
Efficiency at full load			η	%	96					94									
Service life			L_h	*h*	> 20000														
Weight (incl. standard adapter plate)			*m*	*kg*	2.9					3.2									
				lb_m	6					7									
Operating noise (at reference ratio and reference speed – ratio-specific values available in cymex®)			L_{PA}	*dB(A)*	≤ 64														
Max. permitted housing temperature				*°C*	+90														
				F	194														
Ambient temperature				*°C*	0 to +40														
				F	32 to 104														
Lubrication					Lubricated for life														
Direction of rotation					In- and output opposite direction														
Protection class					IP 65														
Metal bellows coupling (recommended product type – validate sizing with cymex®)					BCT - 00015AAX - 031.500														
Bore diameter of coupling on the application side				*mm*	X = 012.000 - 028.000														
Mass moment of inertia (relates to the drive) Clamping hub diameter [mm]	B	11	J_1	*kgcm²*	-	-	-	-	-	0.09	0.09	0.07	0.07	0.06	0.06	0.06	0.06	0.06	0.06
				10⁻³ in.lb.s²	-	-	-	-	-	0.08	0.08	0.06	0.06	0.05	0.05	0.05	0.05	0.05	0.05
	C	14	J_1	*kgcm²*	0.57	0.46	0.41	0.37	0.35	0.21	0.2	0.19	0.19	0.18	0.18	0.17	0.17	0.17	0.17
				10⁻³ in.lb.s²	0.5	0.41	0.36	0.33	0.31	0.19	0.18	0.17	0.17	0.16	0.16	0.15	0.15	0.15	0.15
	E	19	J_1	*kgcm²*	0.92	0.82	0.76	0.72	0.7	-	-	-	-	-	-	-	-	-	-
				10⁻³ in.lb.s²	0.81	0.73	0.67	0.64	0.62	-	-	-	-	-	-	-	-	-	-

Please use our sizing software cymex® for a detailed sizing – **www.wittenstein-cymex.com**
Please contact us for optimum sizing at S1 conditions (Continuous operation).

[a)] At max. 10 % M_{2KMax}
[b)] Valid for standard clamping hub diameter
[c)] Refers to center of the output shaft or flange
[d)] Please reduce input speed at higher ambient temperatures

Motor shaft diameter [mm]

1-stage

up to 14/19 [4] (C [6]/E) clamping hub diameter

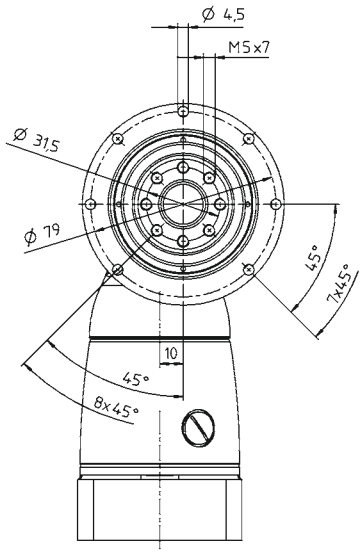

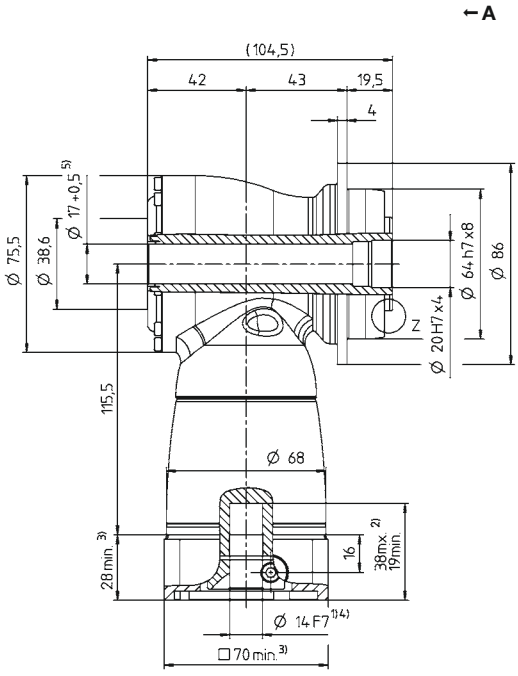

2-stage

up to 11/14 [4] (B [6]/C) clamping hub diameter

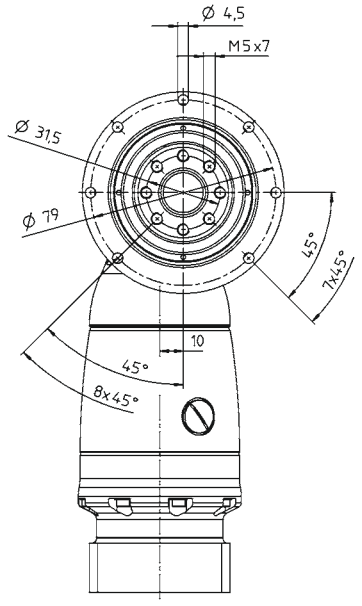

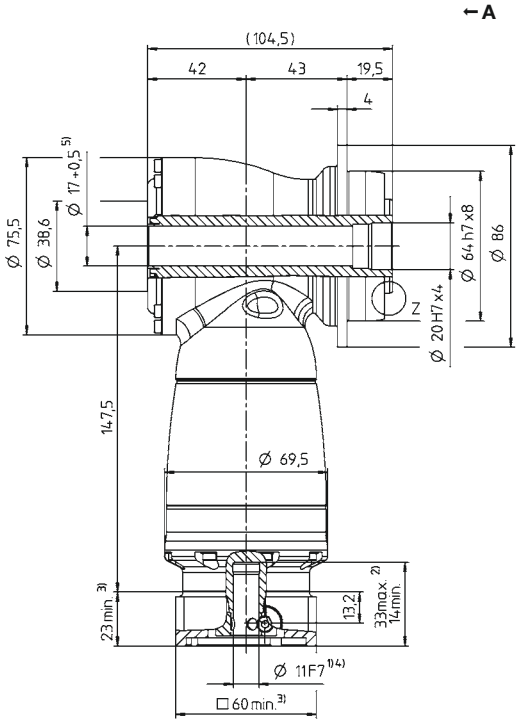

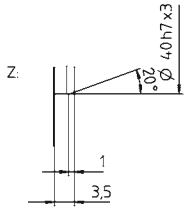

See technical data sheet for available clamping hub diameters (mass moment of inertia). Dimensions available on request.

Non-tolerated dimensions are nominal dimensions
1) Check motor shaft fit
2) Min./Max. permissible motor shaft length. Longer motor shafts are possible, please contact alpha.
3) The dimensions depend on the motor
4) Smaller motor shaft diameter is compensated by a bushing with a minimum thickness of 1 mm
5) Led through element max. Ø 16.8 mm
6) Standard clamping hub diameter

TK+ 010 MF 1-/2-stage

			1-stage					2-stage									
Ratio	*i*		**3**	**4**	**5**	**7**	**10**	**12**	**16**	**20**	**25**	**28**	**35**	**40**	**50**	**70**	**100**
Max. torque [a) b)]	T_{2a}	*Nm*	84	84	84	60	50	84	84	84	84	84	84	84	84	60	50
		in.lb	743	743	743	531	443	743	743	743	743	743	743	743	743	531	443
Max. acceleration torque [b)] (max. 1000 cycles per hour)	T_{2B}	*Nm*	70	70	70	60	50	70	70	70	70	70	70	70	70	60	50
		in.lb	620	620	620	531	443	620	620	620	620	620	620	620	620	531	443
Nominal torque (at n_{1N})	T_{2N}	*Nm*	50	50	50	45	40	50	50	50	50	50	50	50	50	45	40
		in.lb	443	443	443	398	354	443	443	443	443	443	443	443	443	398	354
Emergency stop torque [a) b)] (permitted 1000 times during the service life of the gearbox)	T_{2Not}	*Nm*	95	115	115	110	100	115	115	115	115	115	115	115	115	110	100
		in.lb	841	1018	1018	974	885	1018	1018	1018	1018	1018	1018	1018	1018	974	885
Permitted average input speed (at T_{2N} and 20 °C ambient temperature) [d)]	n_{1N}	n_{1T}	2100	2200	2500	2500	2500	3500	3500	3500	3500	3500	3500	3500	3800	4500	4500
Max. input speed	n_{1Max}	*rpm*	7500	7500	7500	7500	7500	6000	6000	6000	6000	6000	6000	6000	6000	6000	6000
Mean no load running torque [b)] (at n_1 = 3000 rpm and 20 °C gearbox temperature)	T_{012}	*Nm*	2.4	2	1.8	2.4	2.2	0.4	0.4	0.3	0.3	0.3	0.3	0.1	0.1	0.1	0.1
		in.lb	21	18	16	21	19	4	4	3	3	3	3	1	1	1	1
Max. backlash	j_t	*arcmin*	Standard ≤ 4														
Torsional rigidity [b)]	C_{t21}	*Nm/arcmin*	6	7	8	8	8	7	7	7	7	7	7	7	8	8	8
		in.lb/arcmin	53	62	71	71	71	62	62	62	62	62	62	62	71	71	71
Max. axial force [c)]	F_{2AMax}	*N*	3400														
		lb_f	765														
Max. tilting moment	M_{2KMax}	*Nm*	437														
		in.lb	3868														
Efficiency at full load	η	*%*	96					94									
Service life	L_h	*h*	> 20000														
Weight (incl. standard adapter plate)	*m*	*kg*	5.3					6.1									
		lb_m	12					13									
Operating noise (at reference ratio and reference speed – ratio-specific values available in cymex®)	L_{PA}	*dB(A)*	≤ 66														
Max. permitted housing temperature		*°C*	+90														
		F	194														
Ambient temperature		*°C*	0 to +40														
		F	32 to 104														
Lubrication			Lubricated for life														
Direction of rotation			In- and output opposite direction														
Protection class			IP 65														
Metal bellows coupling (recommended product type – validate sizing with cymex®)			BCT - 00060AAX - 050.000														
Bore diameter of coupling on the application side		*mm*	X = 014.000 - 035.000														
Mass moment of inertia (relates to the drive) Clamping hub diameter [mm] — C 14	J_1	$kgcm^2$	-	-	-	-	-	0.31	0.28	0.24	0.23	0.21	0.2	0.19	0.18	0.18	0.18
		10^{-3} $in.lb.s^2$	-	-	-	-	-	0.27	0.25	0.21	0.2	0.19	0.18	0.17	0.16	0.16	0.16
E 19	J_1	$kgcm^2$	1.81	1.39	1.18	1.02	0.93	0.75	0.72	0.68	0.68	0.63	0.63	0.63	0.63	0.63	0.63
		10^{-3} $in.lb.s^2$	1.6	1.23	1.04	0.9	0.82	0.66	0.64	0.6	0.6	0.56	0.56	0.56	0.56	0.56	0.56
H 28	J_1	$kgcm^2$	3.22	2.8	2.6	2.43	2.34	-	-	-	-	-	-	-	-	-	-
		10^{-3} $in.lb.s^2$	2.85	2.48	2.3	2.15	2.07	-	-	-	-	-	-	-	-	-	-

Please use our sizing software cymex® for a detailed sizing – **www.wittenstein-cymex.com**
Please contact us for optimum sizing at S1 conditions (Continuous operation).

[a)] At max. 10 % M_{2KMax}
[b)] Valid for standard clamping hub diameter
[c)] Refers to center of the output shaft or flange
[d)] Please reduce input speed at higher ambient temperatures

View A

Motor shaft diameter [mm]

1-stage

up to 19/28 [4] (E[6]/H) clamping hub diameter

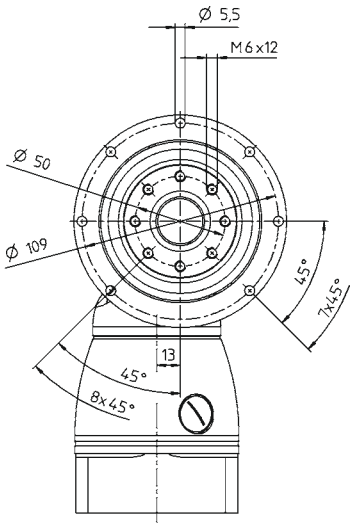

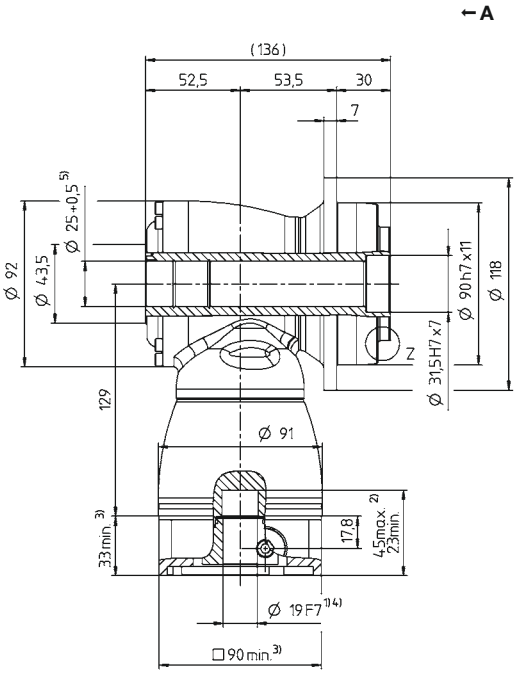

2-stage

up to 14/19 [4] (C[6]/E) clamping hub diameter

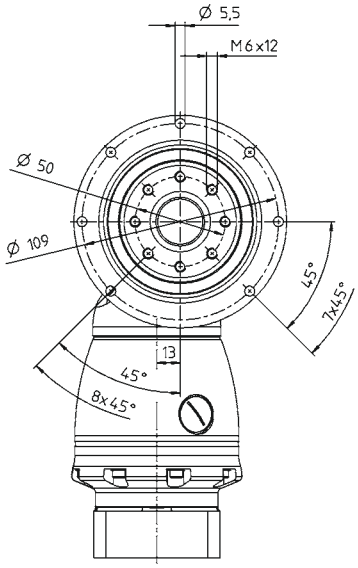

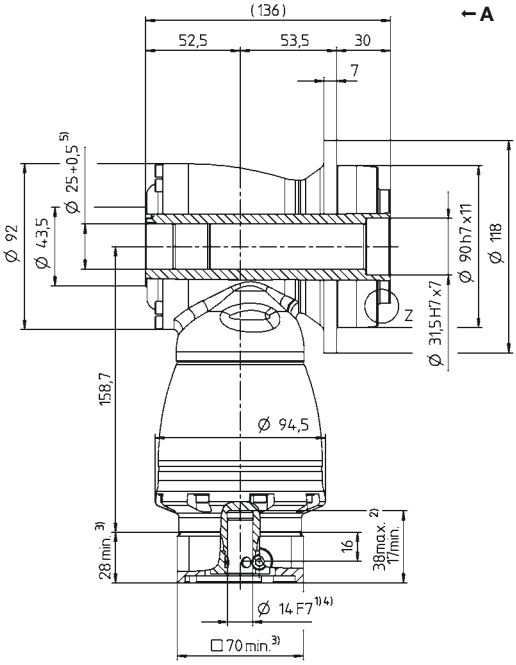

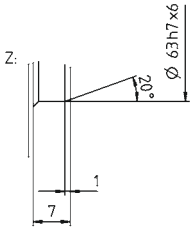

See technical data sheet for available clamping hub diameters (mass moment of inertia). Dimensions available on request.

Non-tolerated dimensions are nominal dimensions
1) Check motor shaft fit
2) Min./Max. permissible motor shaft length. Longer motor shafts are possible, please contact alpha.
3) The dimensions depend on the motor
4) Smaller motor shaft diameter is compensated by a bushing with a minimum thickness of 1 mm
5) Led through element max. Ø 24.8 mm
6) Standard clamping hub diameter

TK+ 025 MF 1-/2-stage

				1-stage					2-stage									
Ratio		i		**3**	**4**	**5**	**7**	**10**	**12**	**16**	**20**	**25**	**28**	**35**	**40**	**50**	**70**	**100**
Max. torque [a) b)]		T_{2a}	Nm	204	204	204	145	125	204	204	204	204	204	204	204	204	145	125
			in.lb	1806	1806	1806	1283	1106	1806	1806	1806	1806	1806	1806	1806	1806	1283	1106
Max. acceleration torque [b)] (max. 1000 cycles per hour)		T_{2B}	Nm	170	170	170	145	125	170	170	170	170	170	170	170	170	145	125
			in.lb	1505	1505	1505	1283	1106	1505	1505	1505	1505	1505	1505	1505	1505	1283	1106
Nominal torque (at n_{1N})		T_{2N}	Nm	100	100	100	90	80	100	100	100	100	100	100	100	100	90	80
			in.lb	885	885	885	797	708	885	885	885	885	885	885	885	885	797	708
Emergency stop torque [a) b)] (permitted 1000 times during the service life of the gearbox)		T_{2Not}	Nm	220	260	260	255	250	260	260	260	260	260	260	260	260	255	250
			in.lb	1947	2301	2301	2257	2213	2301	2301	2301	2301	2301	2301	2301	2301	2257	2213
Permitted average input speed (at T_{2N} and 20 °C ambient temperature) [d)]		n_{1N}	n_{1T}	2000	2100	2400	2200	2200	3100	3100	3100	3100	3100	3100	3100	3500	4200	4200
Max. input speed		n_{1Max}	rpm	5500	5500	5500	5500	5500	4500	4500	4500	4500	4500	4500	4500	4500	4500	4500
Mean no load running torque [b)] (at n_1 = 3000 rpm and 20 °C gearbox temperature)		T_{012}	Nm	4.6	3.6	2.8	4.2	3.4	0.7	0.7	0.6	0.5	0.5	0.4	0.2	0.2	0.2	0.2
			in.lb	41	32	25	37	30	6	6	5	4	4	4	2	2	2	2
Max. backlash		j_t	arcmin	Standard ≤ 4														
Torsional rigidity [b)]		C_{t21}	Nm/arcmin	12	13	16	16	16	13	13	13	13	13	13	13	16	16	16
			in.lb/arcmin	106	115	142	142	142	115	115	115	115	115	115	115	142	142	142
Max. axial force [c)]		F_{2AMax}	N	5700														
			lb_f	1283														
Max. tilting moment		M_{2KMax}	Nm	833														
			in.lb	7373														
Efficiency at full load		η	%	96					94									
Service life		L_h	h	> 20000														
Weight (incl. standard adapter plate)		m	kg	8.9					10.6									
			lb_m	20					23									
Operating noise (at reference ratio and reference speed – ratio-specific values available in cymex®)		L_{PA}	dB(A)	≤ 66														
Max. permitted housing temperature			°C	+90														
			F	194														
Ambient temperature			°C	0 to +40														
			F	32 to 104														
Lubrication				Lubricated for life														
Direction of rotation				In- and output opposite direction														
Protection class				IP 65														
Metal bellows coupling (recommended product type – validate sizing with cymex®)				BCT - 00150AAX - 063.000														
Bore diameter of coupling on the application side			mm	X = 019.000 - 042.000														
Mass moment of inertia (relates to the drive) Clamping hub diameter [mm]	E 19	J_1	$kgcm^2$	-	-	-	-	-	1.08	1.01	0.88	0.85	0.76	0.75	0.7	0.69	0.68	0.68
			10^{-3} in.lb.s²	-	-	-	-	-	0.96	0.89	0.78	0.75	0.67	0.66	0.62	0.61	0.6	0.6
	G 24	J_1	$kgcm^2$	-	-	-	-	-	2.65	2.57	2.44	2.42	2.32	2.31	2.26	2.25	2.25	2.25
			10^{-3} in.lb.s²	-	-	-	-	-	2.35	2.27	2.16	2.14	2.05	2.04	2	1.99	1.99	1.99
	H 28	J_1	$kgcm^2$	5.5	4.3	3.6	3.1	2.9	-	-	-	-	-	-	-	-	-	-
			10^{-3} in.lb.s²	4.87	3.81	3.19	2.74	2.57	-	-	-	-	-	-	-	-	-	-
	K 38	J_1	$kgcm^2$	12.7	11.5	10.9	10.4	10.1	-	-	-	-	-	-	-	-	-	-
			10^{-3} in.lb.s²	11.24	10.18	9.65	9.2	8.94	-	-	-	-	-	-	-	-	-	-

Please use our sizing software cymex® for a detailed sizing – **www.wittenstein-cymex.com**
Please contact us for optimum sizing at S1 conditions (Continuous operation).

a) At max. 10 % M_{2KMax}
b) Valid for standard clamping hub diameter
c) Refers to center of the output shaft or flange
d) Please reduce input speed at higher ambient temperatures

Motor shaft diameter [mm]

1-stage

up to 28/38 [4] (H[6]/K) clamping hub diameter

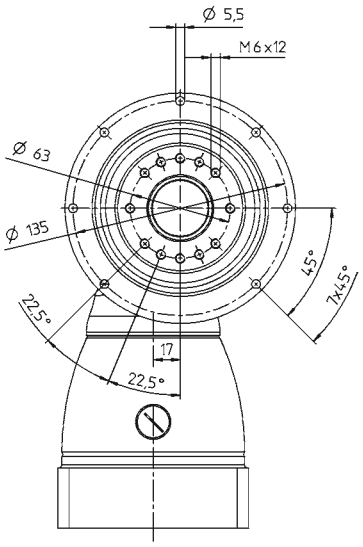

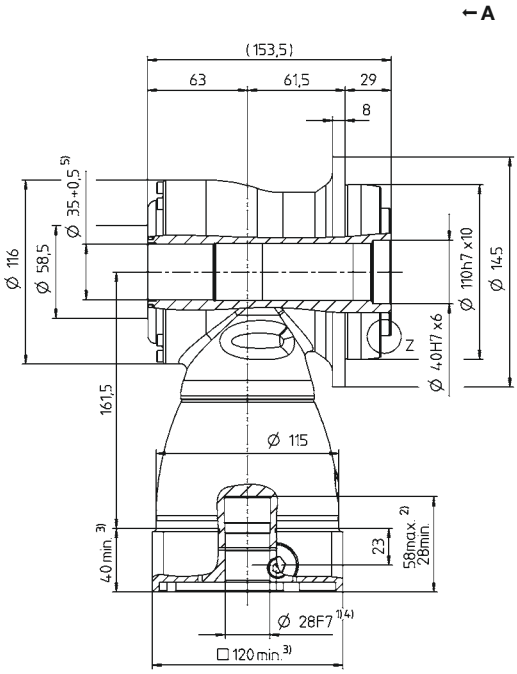

2-stage

up to 19/24 [4] (E[6]/G) clamping hub diameter

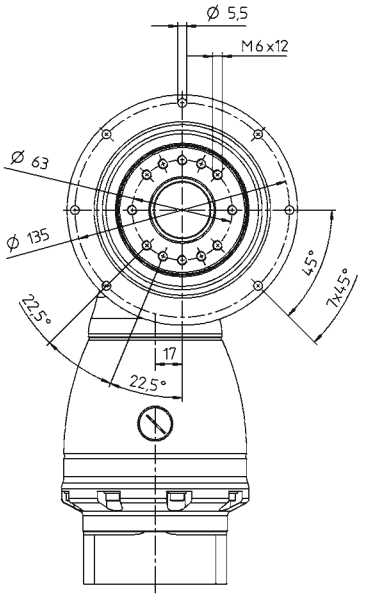

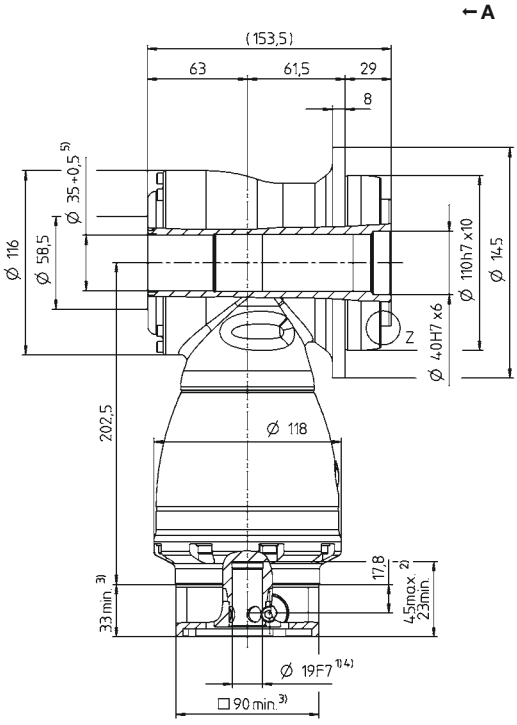

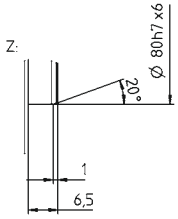

See technical data sheet for available clamping hub diameters (mass moment of inertia). Dimensions available on request.

Non-tolerated dimensions are nominal dimensions
1) Check motor shaft fit
2) Min./Max. permissible motor shaft length. Longer motor shafts are possible, please contact alpha.
3) The dimensions depend on the motor
4) Smaller motor shaft diameter is compensated by a bushing with a minimum thickness of 1 mm
5) Led through element max. Ø 34.8 mm
6) Standard clamping hub diameter

TK+ 050 MF 1-/2-stage

				1-stage					2-stage									
Ratio			*i*	**3**	**4**	**5**	**7**	**10**	**12**	**16**	**20**	**25**	**28**	**35**	**40**	**50**	**70**	**100**
Max. torque [a) b)]			T_{2a}	*Nm*	360	360	360	250	210	360	360	360	360	360	360	360	360	250	210
				in.lb	3186	3186	3186	2213	1859	3186	3186	3186	3186	3186	3186	3186	3186	2213	1859
Max. acceleration torque [b)] (max. 1000 cycles per hour)			T_{2B}	*Nm*	300	300	300	250	210	300	300	300	300	300	300	300	300	250	210
				in.lb	2655	2655	2655	2213	1859	2655	2655	2655	2655	2655	2655	2655	2655	2213	1859
Nominal torque (at n_{1N})			T_{2N}	*Nm*	190	190	190	175	160	190	190	190	190	190	190	190	190	175	160
				in.lb	1682	1682	1682	1549	1416	1682	1682	1682	1682	1682	1682	1682	1682	1549	1416
Emergency stop torque [a) b)] (permitted 1000 times during the service life of the gearbox)			T_{2Not}	*Nm*	400	500	500	450	400	500	500	500	500	500	500	500	500	450	400
				in.lb	3540	4425	4425	3983	3540	4425	4425	4425	4425	4425	4425	4425	4425	3983	3540
Permitted average input speed (at T_{2N} and 20 °C ambient temperature) [d)]			n_{1N}	n_{1T}	1700	1800	2000	1800	1800	2900	2900	2900	2900	2900	2900	2900	3200	3200	3900
Max. input speed			n_{1Max}	*rpm*	5000	5000	5000	5000	5000	4500	4500	4500	4500	4500	4500	4500	4500	4500	4500
Mean no load running torque [b)] (at n_1 = 3000 rpm and 20 °C gearbox temperature)			T_{012}	*Nm*	8.4	6.2	5.4	9	6.6	1.7	1.1	0.8	0.6	0.6	0.5	0.5	0.4	0.4	0.4
				in.lb	74	55	48	80	58	15	10	7	5	5	4	4	4	4	4
Max. backlash			j_t	*arcmin*	Standard ≤ 4														
Torsional rigidity [b)]			C_{t21}	*Nm/arcmin*	36	40	46	44	42	40	40	40	40	40	40	40	46	44	42
				in.lb/arcmin	319	354	407	389	372	354	354	354	354	354	354	354	407	389	372
Max. axial force [c)]			F_{2AMax}	*N*	9900														
				lb_f	2228														
Max. tilting moment			M_{2KMax}	*Nm*	1692														
				in.lb	14976														
Efficiency at full load			η	%	96					94									
Service life			L_h	*h*	> 20000														
Weight (incl. standard adapter plate)			*m*	*kg*	22					26									
				lb_m	49					57									
Operating noise (at reference ratio and reference speed – ratio-specific values available in cymex®)			L_{PA}	*dB(A)*	≤ 68														
Max. permitted housing temperature				*°C*	+90														
				F	194														
Ambient temperature				*°C*	0 to +40														
				F	32 to 104														
Lubrication					Lubricated for life														
Direction of rotation					In- and output opposite direction														
Protection class					IP 65														
Metal bellows coupling (recommended product type – validate sizing with cymex®)					BCT - 00300AAX - 080.000														
Bore diameter of coupling on the application side				*mm*	X = 024.000 - 060.000														
Mass moment of inertia (relates to the drive)	G	24	J_1	$kgcm^2$	-	-	-	-	-	4.43	3.97	3.36	3.22	2.82	2.75	2.5	2.47	2.44	2.42
				10^{-3} $in.lb.s^2$	-	-	-	-	-	3.92	3.51	2.97	2.85	2.5	2.43	2.21	2.19	2.16	2.14
Clamping hub diameter [mm]	K	38	J_1	$kgcm^2$	28.4	21	17.6	14.7	13.1	11.3	10.9	10.3	10.1	9.74	9.66	9.41	9.38	9.35	9.33
				10^{-3} $in.lb.s^2$	25.13	18.59	15.58	13.01	11.59	10	9.65	9.12	8.94	8.62	8.55	8.33	8.3	8.27	8.26

Please use our sizing software cymex® for a detailed sizing – **www.wittenstein-cymex.com**
Please contact us for optimum sizing at S1 conditions (Continuous operation).

a) At max. 10 % M_{2KMax}
b) Valid for standard clamping hub diameter
c) Refers to center of the output shaft or flange
d) Please reduce input speed at higher ambient temperatures

Motor shaft diameter [mm]

1-stage

up to 38 [4] (K)[6] clamping hub diameter

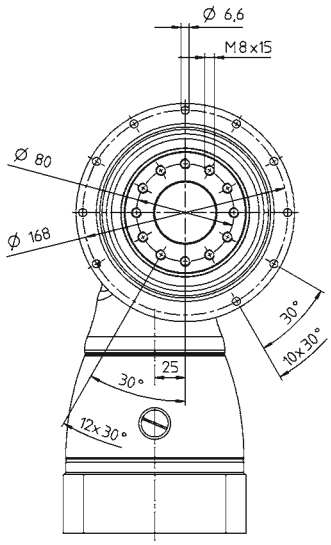

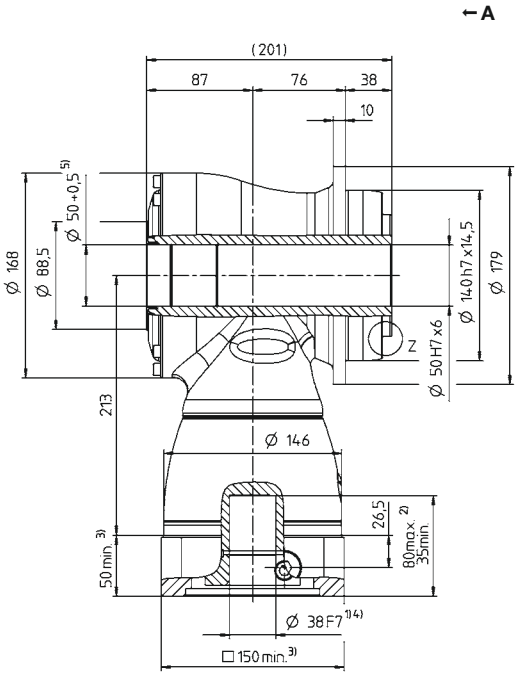

2-stage

up to 24/38 [4] (G[6]/K) clamping hub diameter

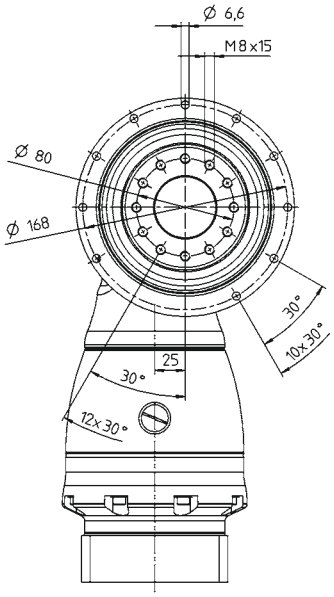

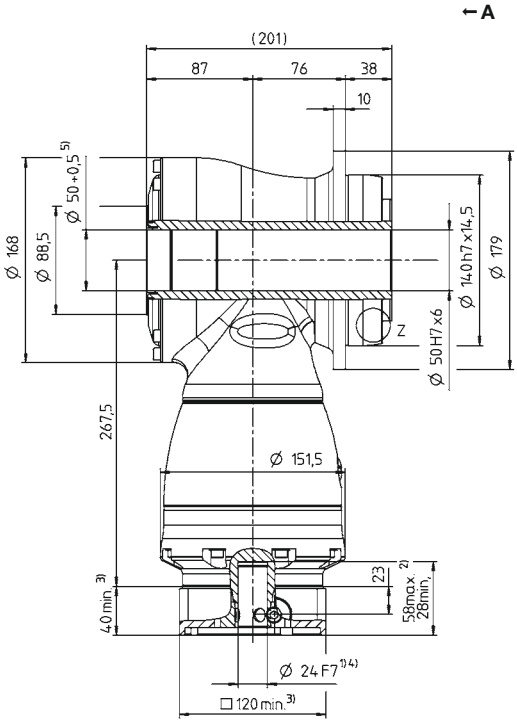

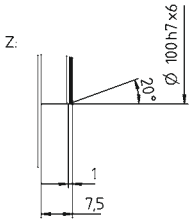

See technical data sheet for available clamping hub diameters (mass moment of inertia). Dimensions available on request.

Non-tolerated dimensions are nominal dimensions
1) Check motor shaft fit
2) Min./Max. permissible motor shaft length. Longer motor shafts are possible, please contact alpha.
3) The dimensions depend on the motor
4) Smaller motor shaft diameter is compensated by a bushing with a minimum thickness of 1 mm
5) Led through element max. Ø 49.8 mm
6) Standard clamping hub diameter

TK+ 110 MF 1-/2-stage

				1-stage					2-stage									
Ratio			*i*	**3**	**4**	**5**	**7**	**10**	**12**	**16**	**20**	**25**	**28**	**35**	**40**	**50**	**70**	**100**
Max. torque [a) b)]			T_{2a}	*Nm*	768	768	768	550	470	768	768	768	768	768	768	768	768	550	470
				in.lb	6797	6797	6797	4868	4160	6797	6797	6797	6797	6797	6797	6797	6797	4868	4160
Max. acceleration torque [b)] (max. 1000 cycles per hour)			T_{2B}	*Nm*	640	640	640	550	470	640	640	640	640	640	640	640	640	550	470
				in.lb	5665	5665	5665	4868	4160	5665	5665	5665	5665	5665	5665	5665	5665	4868	4160
Nominal torque (at n_{1N})			T_{2N}	*Nm*	400	400	400	380	360	400	400	400	400	400	400	400	400	380	360
				in.lb	3540	3540	3540	3363	3186	3540	3540	3540	3540	3540	3540	3540	3540	3363	3186
Emergency stop torque [a) b)] (permitted 1000 times during the service life of the gearbox)			T_{2Not}	*Nm*	900	1050	1050	970	900	1050	1050	1050	1050	1050	1050	1050	1050	970	900
				in.lb	7966	9293	9293	8585	7966	9293	9293	9293	9293	9293	9293	9293	9293	8585	7966
Permitted average input speed (at T_{2N} and 20 °C ambient temperature) [d)]			n_{1N}	n_{1T}	1400	1600	1800	1600	1600	2700	2700	2700	2700	2700	2700	2700	2900	3200	3400
Max. input speed			n_{1Max}	*rpm*	4500	4500	4500	4500	4500	4000	4000	4000	4000	4000	4000	4000	4000	4000	4000
Mean no load running torque [b)] (at n_1 = 3000 rpm and 20 °C gearbox temperature)			T_{012}	*Nm*	17.5	14.5	12	18	15	3.6	2.8	2.2	1.9	1.6	1.4	1.1	1.1	1.1	1.1
				in.lb	155	128	106	159	133	32	25	19	17	14	12	10	10	10	10
Max. backlash			j_t	*arcmin*	Standard ≤ 4														
Torsional rigidity [b)]			C_{t21}	*Nm/arcmin*	76	87	99	97	96	87	87	87	87	87	87	87	99	97	96
				in.lb/arcmin	673	770	876	859	850	770	770	770	770	770	770	770	876	859	850
Max. axial force [c)]			F_{2AMax}	*N*	14200														
				lb_f	3195														
Max. tilting moment			M_{2KMax}	*Nm*	3213														
				in.lb	28438														
Efficiency at full load			η	%	96					94									
Service life			L_h	*h*	> 20000														
Weight (incl. standard adapter plate)			*m*	*kg*	48					54									
				lb_m	106					119									
Operating noise (at reference ratio and reference speed – ratio-specific values available in cymex®)			L_{PA}	*dB(A)*	≤ 68														
Max. permitted housing temperature				*°C*	+90														
				F	194														
Ambient temperature				*°C*	0 to +40														
				F	32 to 104														
Lubrication					Lubricated for life														
Direction of rotation					In- and output opposite direction														
Protection class					IP 65														
Metal bellows coupling (recommended product type – validate sizing with cymex®)					BCT - 01500AAX - 125.000														
Bore diameter of coupling on the application side				*mm*	X = 050.000 - 080.000														
Mass moment of inertia (relates to the drive) Clamping hub diameter [mm]	K	38	J_1	*kgcm²*	-	-	-	-	-	16.8	14.8	12.9	12.3	11.2	10.9	10.3	10.1	10	9.93
				10^{-3} *in.lb.s²*	-	-	-	-	-	14.87	13.1	11.42	10.89	9.91	9.65	9.12	8.94	8.85	8.79
	M	48	J_1	*kgcm²*	96.5	64.6	50.5	38.2	31.8	31.5	29.5	27.6	27	25.9	25.6	25	24.8	24.7	24.6
				10^{-3} *in.lb.s²*	85.4	57.17	44.69	33.81	28.14	27.88	26.11	24.43	23.9	22.92	22.66	22.13	21.95	21.86	21.77

Please use our sizing software cymex® for a detailed sizing – **www.wittenstein-cymex.com**
Please contact us for optimum sizing at S1 conditions (Continuous operation).

[a)] At max. 10 % M_{2KMax}
[b)] Valid for standard clamping hub diameter
[c)] Refers to center of the output shaft or flange
[d)] Please reduce input speed at higher ambient temperatures

View A

Motor shaft diameter [mm]

1-stage

up to 48 [4] (M)[6] clamping hub diameter

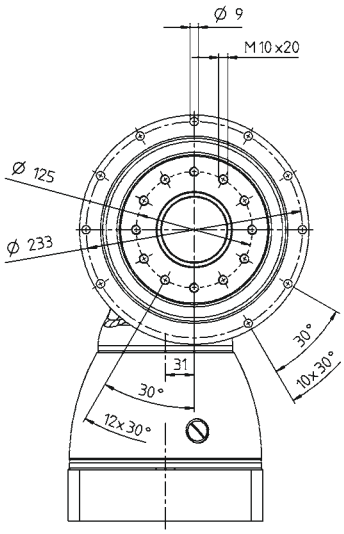

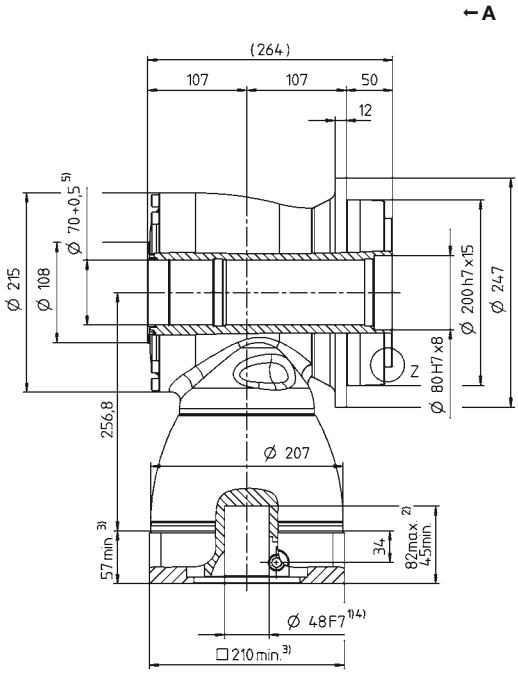

2-stage

up to 38/48 [4] (K[6]/M) clamping hub diameter

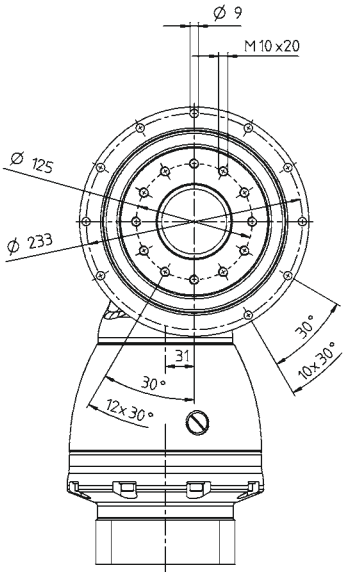

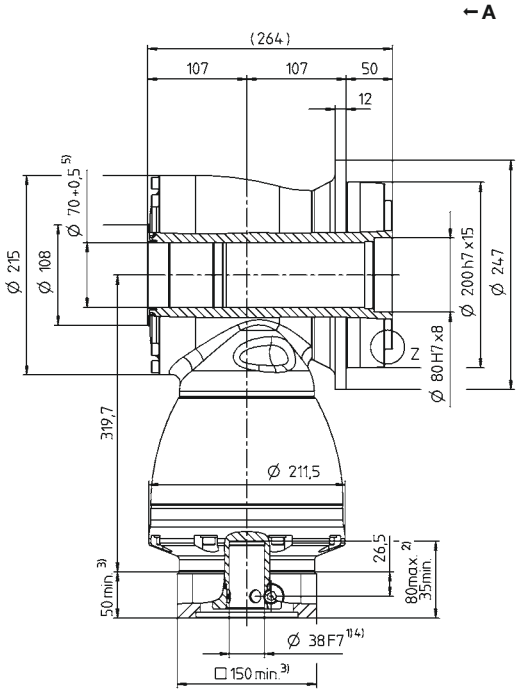

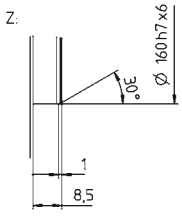

See technical data sheet for available clamping hub diameters (mass moment of inertia). Dimensions available on request.

Non-tolerated dimensions are nominal dimensions
1) Check motor shaft fit
2) Min./Max. permissible motor shaft length. Longer motor shafts are possible, please contact alpha.
3) The dimensions depend on the motor
4) Smaller motor shaft diameter is compensated by a bushing with a minimum thickness of 1 mm
5) Led through element max. Ø 69.8 mm
6) Standard clamping hub diameter

TPK+ 010 MF 2-stage

				2-stage										
Ratio			i	**12**	**16**	**20**	**25**	**28**	**35**	**40**	**49**	**50**	**70**	**100**
Max. torque [a) b)]			T_{2a}	*Nm*	144	144	180	180	210	210	80	175	100	140	168
				in.lb	1275	1275	1593	1593	1859	1859	708	1549	885	1239	1487
Max. acceleration torque [b)] (max. 1000 cycles per hour)			T_{2B}	*Nm*	120	120	150	150	172	172	80	172	100	140	126
				in.lb	1062	1062	1328	1328	1522	1522	708	1522	885	1239	1115
Nominal torque (at n_{1N})			T_{2N}	*Nm*	75	75	75	75	75	75	60	75	75	75	60
				in.lb	664	664	664	664	664	664	531	664	664	664	531
Emergency stop torque [a) b)] (permitted 1000 times during the service life of the gearbox)			T_{2Not}	*Nm*	160	200	250	250	251	251	160	251	200	251	251
				in.lb	1416	1770	2213	2213	2222	2222	1416	2222	1770	2222	2222
Permitted average input speed (at T_{2N} and 20 °C ambient temperature) [d)]			n_{1N}	n_{1T}	2000	2400	2400	2700	2400	2500	2500	2500	2500	2500	2500
Max. input speed			n_{1Max}	*rpm*	7500	7500	7500	7500	7500	7500	7500	7500	7500	7500	7500
Mean no load running torque [b)] (at n_1 = 3000 rpm and 20 °C gearbox temperature)			T_{012}	*Nm*	1.5	1.3	1.2	1.2	1.2	1.3	1.3	1.3	1.3	1.3	1.3
				in.lb	13	12	11	11	11	12	12	12	12	12	12
Max. backlash			j_t	*arcmin*	Standard ≤ 5 / Reduced ≤ 3										
Torsional rigidity [b)]			C_{t21}	*Nm/arcmin*	16	16	20	21	23	24	15	23	19	22	27
				in.lb/arcmin	142	142	177	186	204	212	133	204	168	195	239
Tilting rigidity			C_{2K}	*Nm/arcmin*	225										
				in.lb/arcmin	1991										
Max. axial force [c)]			F_{2AMax}	*N*	2795										
				lb_f	629										
Max. tilting moment			M_{2KMax}	*Nm*	235										
				in.lb	2080										
Efficiency at full load			η	%	94										
Service life			L_h	*h*	> 20000										
Weight (incl. standard adapter plate)			m	*kg*	5.2										
				lb_m	11										
Operating noise (at reference ratio and reference speed – ratio-specific values available in cymex®)			L_{PA}	*dB(A)*	≤ 66										
Max. permitted housing temperature				*°C*	+90										
				F	194										
Ambient temperature				*°C*	0 to +40										
				F	32 to 104										
Lubrication					Lubricated for life										
Direction of rotation					In- and output opposite direction										
Protection class					IP 65										
Metal bellows coupling (recommended product type – validate sizing with cymex®)					BCT - 00060AAX - 050.000										
Bore diameter of coupling on the application side				*mm*	X = 014.000 - 035.000										
Mass moment of inertia (relates to the drive) Clamping hub diameter [mm]	C	14	J_1	*kgcm²*	0.55	0.46	0.44	0.39	0.43	0.36	0.34	0.37	0.34	0.34	0.34
				10^{-3} in.lb.s²	0.49	0.41	0.39	0.35	0.38	0.32	0.3	0.33	0.3	0.3	0.3
	E	19	J_1	*kgcm²*	0.9	0.81	0.79	0.75	0.78	0.71	0.7	0.72	0.7	0.69	0.69
				10^{-3} in.lb.s²	0.8	0.72	0.7	0.66	0.69	0.63	0.62	0.64	0.62	0.61	0.61

Please use our sizing software cymex® for a detailed sizing – **www.wittenstein-cymex.com**
Please contact us for optimum sizing at S1 conditions (Continuous operation).

[a)] At max. 10 % M_{2KMax}
[b)] Valid for standard clamping hub diameter
[c)] Refers to center of the output shaft or flange
[d)] Please reduce input speed at higher ambient temperatures

Motor shaft diameter [mm]

2-stage

up to 14/19 [4]
(C [5] / E) clamping
hub diameter

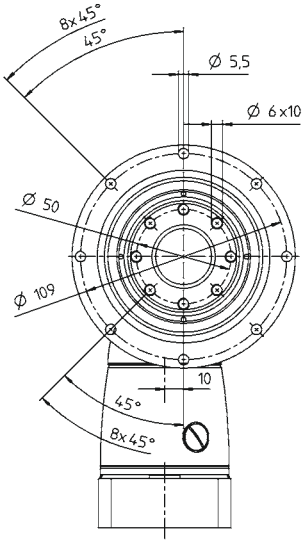

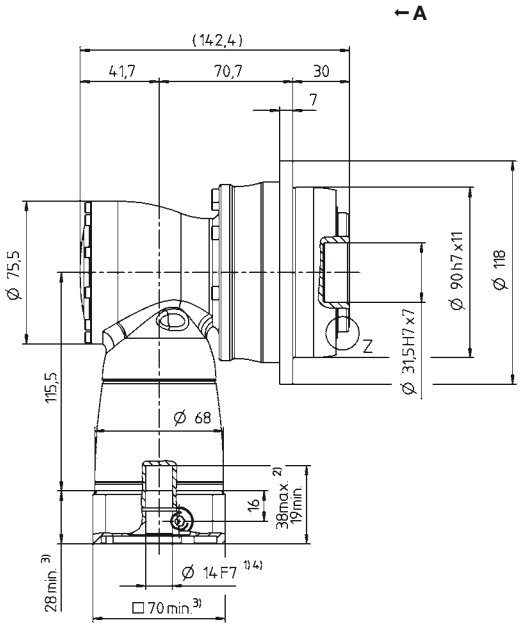

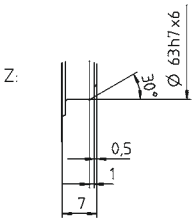

See technical data sheet for available clamping hub diameters (mass moment of inertia). Dimensions available on request.

Non-tolerated dimensions are nominal dimensions
1) Check motor shaft fit
2) Min. / Max. permissible motor shaft length. Longer motor shafts are possible, please contact alpha.
3) The dimensions depend on the motor
4) Smaller motor shaft diameter is compensated by a bushing with a minimum thickness of 1 mm
5) Standard clamping hub diameter

TPK+ 010 MF 3-stage

			3-stage													
Ratio	*i*		**64**	**84**	**100**	**125**	**140**	**175**	**200**	**250**	**280**	**350**	**400**	**500**	**700**	**1000**
Max. torque [a) b)]	T_{2a}	*Nm*	144	144	180	180	180	180	180	180	210	210	96	120	168	168
		in.lb	1275	1275	1593	1593	1593	1593	1593	1593	1859	1859	850	1062	1487	1487
Max. acceleration torque [b)] (max. 1000 cycles per hour)	T_{2B}	*Nm*	120	120	150	150	150	150	150	150	172	172	80	100	140	126
		in.lb	1062	1062	1328	1328	1328	1328	1328	1328	1522	1522	708	885	1239	1115
Nominal torque (at n_{1N})	T_{2N}	*Nm*	85	85	90	90	90	90	90	90	75	90	60	75	90	60
		in.lb	752	752	797	797	797	797	797	797	664	797	531	664	797	531
Emergency stop torque [a) b)] (permitted 1000 times during the service life of the gearbox)	T_{2Not}	*Nm*	200	160	250	250	250	250	250	250	251	251	160	200	251	251
		in.lb	1770	1416	2213	2213	2213	2213	2213	2213	2222	2222	1416	1770	2222	2222
Permitted average input speed (at T_{2N} and 20 °C ambient temperature) [d)]	n_{1N}	n_{1T}	4400	4400	4400	4400	4400	4400	4400	4800	4400	4800	5500	5500	5500	5500
Max. input speed	n_{1Max}	*rpm*	6000	6000	6000	6000	6000	6000	6000	6000	6000	6000	6000	6000	6000	6000
Mean no load running torque [b)] (at n_1 = 3000 rpm and 20 °C gearbox temperature)	T_{012}	*Nm*	0.3	0.3	0.3	0.3	0.3	0.3	0.2	0.2	0.2	0.2	0.2	0.2	0.2	0.2
		in.lb	3	3	3	3	3	3	2	2	2	2	2	2	2	2
Max. backlash	j_t	*arcmin*	Standard ≤ 5 / Reduced ≤ 3													
Torsional rigidity [b)]	C_{t21}	*Nm/arcmin*	16	16	20	21	20	21	20	21	23	24	15	19	22	27
		in.lb/arcmin	142	142	177	186	177	186	177	186	204	212	133	168	195	239
Tilting rigidity	C_{2K}	*Nm/arcmin*	225													
		in.lb/arcmin	1991													
Max. axial force [c)]	F_{2AMax}	*N*	2795													
		lb_f	629													
Max. tilting moment	M_{2KMax}	*Nm*	235													
		in.lb	2080													
Efficiency at full load	η	%	92													
Service life	L_h	*h*	> 20000													
Weight (incl. standard adapter plate)	*m*	*kg*	5.5													
		lb_m	12													
Operating noise (at reference ratio and reference speed – ratio-specific values available in cymex®)	L_{PA}	*dB(A)*	≤ 66													
Max. permitted housing temperature		*°C*	+90													
		F	194													
Ambient temperature		*°C*	0 to +40													
		F	32 to 104													
Lubrication			Lubricated for life													
Direction of rotation			In- and output opposite direction													
Protection class			IP 65													
Metal bellows coupling (recommended product type – validate sizing with cymex®)			BCT - 00060AAX - 050.000													
Bore diameter of coupling on the application side		*mm*	X = 014.000 - 035.000													
Mass moment of inertia (relates to the drive) Clamping hub diameter [mm] B 11	J_1	$kgcm^2$	0.09	0.07	0.08	0.07	0.06	0.06	0.06	0.06	0.06	0.06	0.06	0.06	0.06	0.06
		10^{-3} $in.lb.s^2$	0.08	0.06	0.07	0.06	0.05	0.05	0.05	0.05	0.05	0.05	0.05	0.05	0.05	0.05
C 14	J_1	$kgcm^2$	0.2	0.18	0.19	0.19	0.18	0.18	0.17	0.17	0.17	0.17	0.17	0.17	0.17	0.17
		10^{-3} $in.lb.s^2$	0.18	0.16	0.17	0.17	0.16	0.16	0.15	0.15	0.15	0.15	0.15	0.15	0.15	0.15

Please use our sizing software cymex® for a detailed sizing – **www.wittenstein-cymex.com**
Please contact us for optimum sizing at S1 conditions (Continuous operation).

[a)] At max. 10 % M_{2KMax}
[b)] Valid for standard clamping hub diameter
[c)] Refers to center of the output shaft or flange
[d)] Please reduce input speed at higher ambient temperatures

View A

Motor shaft diameter [mm]

3-stage

up to 11/14 [4] (B[5]/C) clamping hub diameter

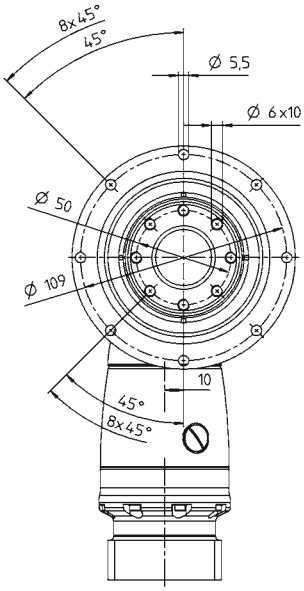

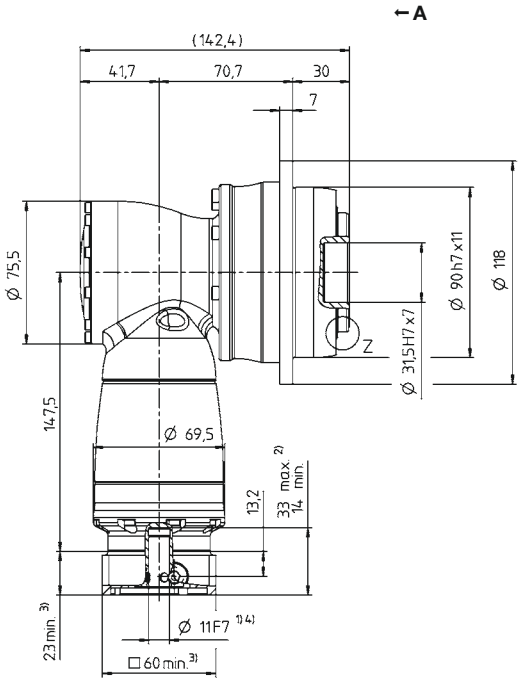

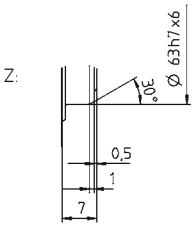

See technical data sheet for available clamping hub diameters (mass moment of inertia). Dimensions available on request.

Non-tolerated dimensions are nominal dimensions
1) Check motor shaft fit
2) Min./Max. permissible motor shaft length. Longer motor shafts are possible, please contact alpha.
3) The dimensions depend on the motor
4) Smaller motor shaft diameter is compensated by a bushing with a minimum thickness of 1 mm
5) Standard clamping hub diameter

TPK+ 025 MF 2-stage

				2-stage										
Ratio			i	**12**	**16**	**20**	**25**	**28**	**35**	**40**	**49**	**50**	**70**	**100**
Max. torque [a) b)]			T_{2a}	Nm	336	336	380	380	352	352	200	352	250	350	352
				in.lb	2974	2974	3363	3363	3115	3115	1770	3115	2213	3098	3115
Max. acceleration torque [b)] (max. 1000 cycles per hour)			T_{2B}	Nm	280	280	350	350	352	352	200	352	250	350	318
				in.lb	2478	2478	3098	3098	3115	3115	1770	3115	2213	3098	2815
Nominal torque (at n_{1N})			T_{2N}	Nm	170	170	170	170	170	170	160	170	170	170	120
				in.lb	1505	1505	1505	1505	1505	1505	1416	1505	1505	1505	1062
Emergency stop torque [a) b)] (permitted 1000 times during the service life of the gearbox)			T_{2Not}	Nm	380	460	575	575	625	625	400	625	500	625	625
				in.lb	3363	4071	5089	5089	5532	5532	3540	5532	4425	5532	5532
Permitted average input speed (at T_{2N} and 20 °C ambient temperature) [d)]			n_{1N}	n_{1T}	2000	2400	2400	2700	2400	2500	2500	2500	2500	2500	2500
Max. input speed			n_{1Max}	rpm	7500	7500	7500	7500	7500	7500	7500	7500	7500	7500	7500
Mean no load running torque [b)] (at n_1 = 3000 rpm and 20 °C gearbox temperature)			T_{012}	Nm	2.5	2.1	2	1.8	2	2.2	2	2.2	2	2	2
				in.lb	22	19	18	16	18	19	18	19	18	18	18
Max. backlash			j_t	arcmin	Standard ≤ 4 / Reduced ≤ 2										
Torsional rigidity [b)]			C_{t21}	Nm/arcmin	40	42	53	55	59	60	44	60	55	60	56
				in.lb/arcmin	354	372	469	487	522	531	389	531	487	531	496
Tilting rigidity			C_{2K}	Nm/arcmin	550										
				in.lb/arcmin	4868										
Max. axial force [c)]			F_{2AMax}	N	4800										
				lb_f	1080										
Max. tilting moment			M_{2KMax}	Nm	413										
				in.lb	3655										
Efficiency at full load			η	%	94										
Service life			L_h	h	> 20000										
Weight (incl. standard adapter plate)			m	kg	9										
				lb_m	20										
Operating noise (at reference ratio and reference speed – ratio-specific values available in cymex®)			L_{PA}	dB(A)	≤ 68										
Max. permitted housing temperature				°C	+90										
				F	194										
Ambient temperature				°C	0 to +40										
				F	32 to 104										
Lubrication					Lubricated for life										
Direction of rotation					In- and output opposite direction										
Protection class					IP 65										
Metal bellows coupling (recommended product type – validate sizing with cymex®)					BCT - 00150AAX - 063.000										
Bore diameter of coupling on the application side				mm	X = 019.000 - 042.000										
Mass moment of inertia (relates to the drive) Clamping hub diameter [mm]	E	19	J_1	$kgcm^2$	1.43	1.18	1.16	1.04	1.14	0.94	0.89	0.95	0.89	0.89	0.89
				10^{-3} in.lb.s²	1.27	1.04	1.03	0.92	1.01	0.83	0.79	0.84	0.79	0.79	0.79
	H	28	J_1	$kgcm^2$	2.85	2.59	2.57	2.45	2.56	2.4	2.31	2.37	2.3	2.3	2.3
				10^{-3} in.lb.s²	2.52	2.29	2.27	2.17	2.27	2.12	2.04	2.1	2.04	2.04	2.04

Please use our sizing software cymex® for a detailed sizing – **www.wittenstein-cymex.com**
Please contact us for optimum sizing at S1 conditions (Continuous operation).

[a)] At max. 10 % M_{2KMax}
[b)] Valid for standard clamping hub diameter
[c)] Refers to center of the output shaft or flange
[d)] Please reduce input speed at higher ambient temperatures

View A

Motor shaft diameter [mm]

2-stage

up to 19/28 [4] (E[5]/H) clamping hub diameter

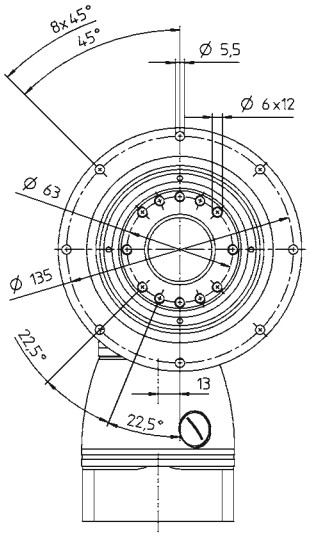

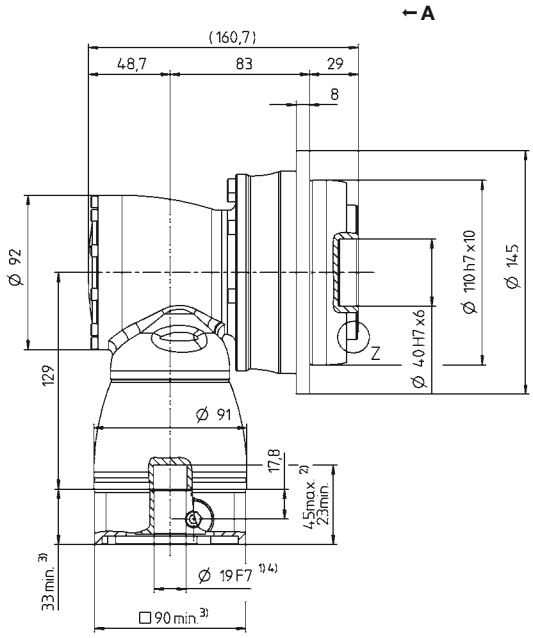

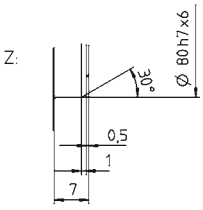

See technical data sheet for available clamping hub diameters (mass moment of inertia). Dimensions available on request.

Non-tolerated dimensions are nominal dimensions
1) Check motor shaft fit
2) Min./Max. permissible motor shaft length. Longer motor shafts are possible, please contact alpha.
3) The dimensions depend on the motor
4) Smaller motor shaft diameter is compensated by a bushing with a minimum thickness of 1 mm
5) Standard clamping hub diameter

TPK+ 025 MF 3-stage

			3-stage													
Ratio	*i*		**64**	**84**	**100**	**125**	**140**	**175**	**200**	**250**	**280**	**350**	**400**	**500**	**700**	**1000**
Max. torque [a) b)]	T_{2a}	*Nm*	336	336	380	380	380	380	380	380	352	352	240	300	352	352
		in.lb	2974	2974	3363	3363	3363	3363	3363	3363	3115	3115	2124	2655	3115	3115
Max. acceleration torque [b)] (max. 1000 cycles per hour)	T_{2B}	*Nm*	280	280	350	350	350	350	350	350	352	352	200	250	350	318
		in.lb	2478	2478	3098	3098	3098	3098	3098	3098	3115	3115	1770	2213	3098	2815
Nominal torque (at n_{1N})	T_{2N}	*Nm*	200	170	200	200	200	200	200	200	210	200	160	200	200	120
		in.lb	1770	1505	1770	1770	1770	1770	1770	1770	1859	1770	1416	1770	1770	1062
Emergency stop torque [a) b)] (permitted 1000 times during the service life of the gearbox)	T_{2Not}	*Nm*	460	380	575	575	575	575	575	575	625	625	400	500	625	625
		in.lb	4071	3363	5089	5089	5089	5089	5089	5089	5532	5532	3540	4425	5532	5532
Permitted average input speed (at T_{2N} and 20 °C ambient temperature) [d)]	n_{1N}	n_{1T}	3500	3500	3500	3500	3500	3500	3500	3800	3500	3800	4500	4500	4500	4500
Max. input speed	n_{1Max}	*rpm*	6000	6000	6000	6000	6000	6000	6000	6000	6000	6000	6000	6000	6000	6000
Mean no load running torque [b)] (at n_1 = 3000 rpm and 20 °C gearbox temperature)	T_{012}	*Nm*	0.4	0.3	0.3	0.3	0.3	0.3	0.2	0.2	0.2	0.2	0.2	0.2	0.2	0.2
		in.lb	4	3	3	3	3	3	2	2	2	2	2	2	2	2
Max. backlash	j_t	*arcmin*	Standard ≤ 4 / Reduced ≤ 2													
Torsional rigidity [b)]	C_{t21}	*Nm/arcmin*	42	40	53	55	53	55	53	55	59	60	44	55	60	56
		in.lb/arcmin	372	354	469	487	469	487	469	487	522	531	389	487	531	496
Tilting rigidity	C_{2K}	*Nm/arcmin*	550													
		in.lb/arcmin	4868													
Max. axial force [c)]	F_{2AMax}	*N*	4800													
		lb_f	1080													
Max. tilting moment	M_{2KMax}	*Nm*	413													
		in.lb	3655													
Efficiency at full load	η	%	92													
Service life	L_h	*h*	> 20000													
Weight (incl. standard adapter plate)	*m*	*kg*	9.8													
		lb_m	22													
Operating noise (at reference ratio and reference speed – ratio-specific values available in cymex®)	L_{PA}	*dB(A)*	≤ 68													
Max. permitted housing temperature		°C	+90													
		F	194													
Ambient temperature		°C	0 to +40													
		F	32 to 104													
Lubrication			Lubricated for life													
Direction of rotation			In- and output opposite direction													
Protection class			IP 65													
Metal bellows coupling (recommended product type – validate sizing with cymex®)			BCT - 00150AAX - 063.000													
Bore diameter of coupling on the application side		*mm*	X = 019.000 - 042.000													
Mass moment of inertia (relates to the drive) Clamping hub diameter [mm] C 14	J_1	$kgcm^2$	0.28	0.23	0.24	0.23	0.21	0.2	0.19	0.18	0.19	0.18	0.18	0.18	0.18	0.18
		10^{-3} $in.lb.s^2$	0.25	0.2	0.21	0.2	0.19	0.18	0.17	0.16	0.17	0.16	0.16	0.16	0.16	0.16
E 19	J_1	$kgcm^2$	0.72	0.63	0.68	0.68	0.63	0.63	0.63	0.63	0.63	0.63	0.63	0.63	0.63	0.63
		10^{-3} $in.lb.s^2$	0.64	0.56	0.6	0.6	0.56	0.56	0.56	0.56	0.56	0.56	0.56	0.56	0.56	0.56

Please use our sizing software cymex® for a detailed sizing – **www.wittenstein-cymex.com**
Please contact us for optimum sizing at S1 conditions (Continuous operation).

a) At max. 10 % M_{2KMax}
b) Valid for standard clamping hub diameter
c) Refers to center of the output shaft or flange
d) Please reduce input speed at higher ambient temperatures

View A

Motor shaft diameter [mm]

3-stage

up to 14/19 [4] (C [5]/E) clamping hub diameter

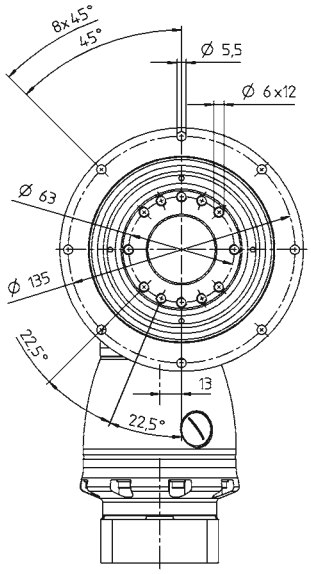

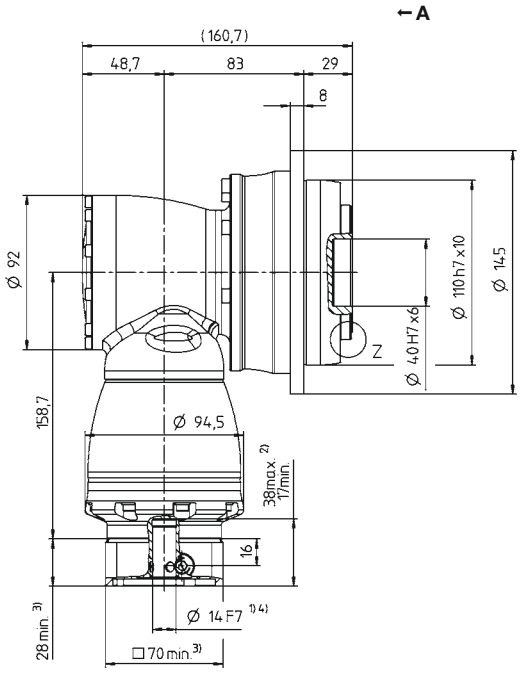

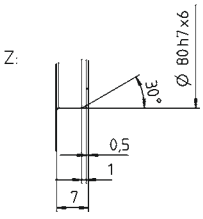

See technical data sheet for available clamping hub diameters (mass moment of inertia). Dimensions available on request.

Non-tolerated dimensions are nominal dimensions
1) Check motor shaft fit
2) Min./Max. permissible motor shaft length. Longer motor shafts are possible, please contact alpha.
3) The dimensions depend on the motor
4) Smaller motor shaft diameter is compensated by a bushing with a minimum thickness of 1 mm
5) Standard clamping hub diameter

TPK+ 050 MF 2-stage

				2-stage										
Ratio			*i*	**12**	**16**	**20**	**25**	**28**	**35**	**40**	**49**	**50**	**70**	**100**
Max. torque [a) b)]			T_{2a}	*Nm*	816	816	992	992	868	868	500	868	625	868	720
				in.lb	7222	7222	8780	8780	7682	7682	4425	7682	5532	7682	6373
Max. acceleration torque [b)] (max. 1000 cycles per hour)			T_{2B}	*Nm*	680	680	840	840	840	840	500	840	625	840	648
				in.lb	6019	6019	7435	7435	7435	7435	4425	7435	5532	7435	5735
Nominal torque (at n_{1N})			T_{2N}	*Nm*	370	370	370	370	370	370	320	370	370	370	240
				in.lb	3275	3275	3275	3275	3275	3275	2832	3275	3275	3275	2124
Emergency stop torque [a) b)] (permitted 1000 times during the service life of the gearbox)			T_{2Not}	*Nm*	880	1040	1250	1250	1250	1250	1000	1250	1250	1250	1250
				in.lb	7789	9205	11064	11064	11064	11064	8851	11064	11064	11064	11064
Permitted average input speed (at T_{2N} and 20 °C ambient temperature) [d)]			n_{1N}	n_{1T}	1900	2300	2300	2600	2300	2300	2300	2300	2300	2300	2300
Max. input speed			n_{1Max}	*rpm*	5500	5500	5500	5500	5500	5500	5500	5500	5500	5500	5500
Mean no load running torque [b)] (at n_1 = 3000 rpm and 20 °C gearbox temperature)			T_{012}	*Nm*	4	3.7	3.6	2.8	3.5	3.9	3.1	3.9	3.1	3.1	3.1
				in.lb	35	33	32	25	31	35	27	35	27	27	27
Max. backlash			j_t	*arcmin*	Standard ≤ 4 / Reduced ≤ 2										
Torsional rigidity [b)]			C_{t21}	*Nm/arcmin*	87	91	111	119	123	127	96	127	115	125	112
				in.lb/arcmin	770	805	982	1053	1089	1124	850	1124	1018	1106	991
Tilting rigidity			C_{2K}	*Nm/arcmin*	560										
				in.lb/arcmin	4956										
Max. axial force [c)]			F_{2AMax}	*N*	6130										
				lb_f	1379										
Max. tilting moment			M_{2KMax}	*Nm*	1295										
				in.lb	11462										
Efficiency at full load			η	%	94										
Service life			L_h	*h*	> 20000										
Weight (incl. standard adapter plate)			*m*	*kg*	17										
				lb_m	38										
Operating noise (at reference ratio and reference speed – ratio-specific values available in cymex®)			L_{PA}	*dB(A)*	≤ 68										
Max. permitted housing temperature				°C	+90										
				F	194										
Ambient temperature				°C	0 to +40										
				F	32 to 104										
Lubrication					Lubricated for life										
Direction of rotation					In- and output opposite direction										
Protection class					IP 65										
Metal bellows coupling (recommended product type – validate sizing with cymex®)					BCT - 00300AAX - 080.000										
Bore diameter of coupling on the application side				*mm*	X = 024.000 - 060.000										
Mass moment of inertia (relates to the drive) Clamping hub diameter [mm]	H	28	J_1	$kgcm^2$	4.56	3.76	3.71	3.28	3.66	3	2.79	3.1	2.78	2.77	2.77
				10^{-3} $in.lb.s^2$	4.04	3.33	3.28	2.9	3.24	2.66	2.47	2.74	2.46	2.45	2.45
	K	38	J_1	$kgcm^2$	11.7	10.9	10.9	10.4	10.8	10.3	9.95	10.4	9.94	9.94	9.94
				10^{-3} $in.lb.s^2$	10.35	9.65	9.65	9.2	9.56	9.12	8.81	9.2	8.8	8.8	8.8

Please use our sizing software cymex® for a detailed sizing – **www.wittenstein-cymex.com**
Please contact us for optimum sizing at S1 conditions (Continuous operation).

[a)] At max. 10 % M_{2KMax}
[b)] Valid for standard clamping hub diameter
[c)] Refers to center of the output shaft or flange
[d)] Please reduce input speed at higher ambient temperatures

View A

Motor shaft diameter [mm]

2-stage

up to 28/38 [4] (H[5]/K) clamping hub diameter

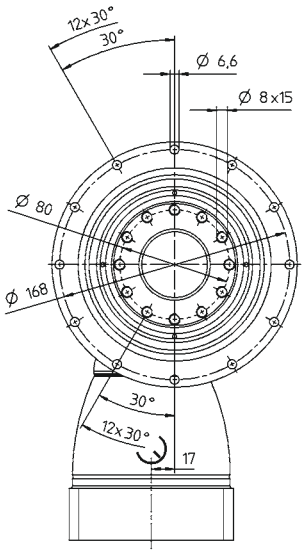

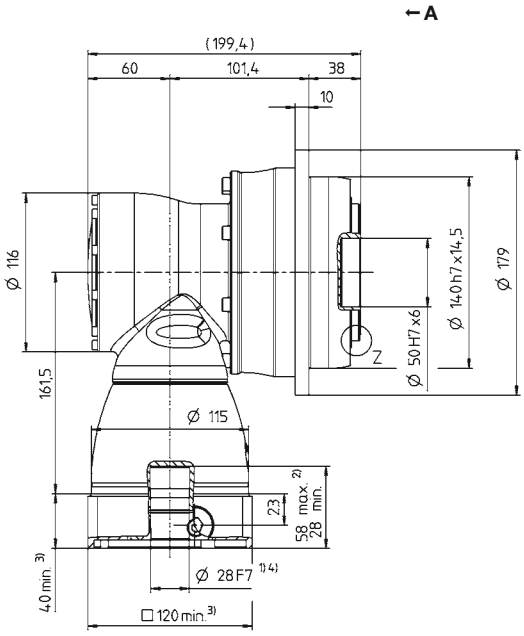

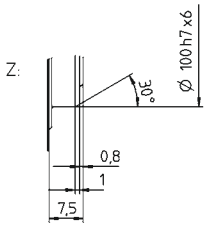

See technical data sheet for available clamping hub diameters (mass moment of inertia). Dimensions available on request.

Non-tolerated dimensions are nominal dimensions
1) Check motor shaft fit
2) Min./Max. permissible motor shaft length. Longer motor shafts are possible, please contact alpha.
3) The dimensions depend on the motor
4) Smaller motor shaft diameter is compensated by a bushing with a minimum thickness of 1 mm
5) Standard clamping hub diameter

TPK+ 050 MF 3-stage

				3-stage													
Ratio			*i*	**64**	**84**	**100**	**125**	**140**	**175**	**200**	**250**	**280**	**350**	**400**	**500**	**700**	**1000**
Max. torque [a) b)]			T_{2a}	*Nm*	816	816	992	992	992	992	992	992	868	868	600	750	868	720
				in.lb	7222	7222	8780	8780	8780	8780	8780	8780	7682	7682	5310	6638	7682	6373
Max. acceleration torque [b)] (max. 1000 cycles per hour)			T_{2B}	*Nm*	680	680	840	840	840	840	840	840	840	840	500	625	840	648
				in.lb	6019	6019	7435	7435	7435	7435	7435	7435	7435	7435	4425	5532	7435	5735
Nominal torque (at n_{1N})			T_{2N}	*Nm*	400	400	400	400	400	400	400	400	400	400	320	370	400	240
				in.lb	3540	3540	3540	3540	3540	3540	3540	3540	3540	3540	2832	3275	3540	2124
Emergency stop torque [a) b)] (permitted 1000 times during the service life of the gearbox)			T_{2Not}	*Nm*	1040	880	1250	1250	1250	1250	1250	1250	1250	1250	1000	1250	1250	1250
				in.lb	9205	7789	11064	11064	11064	11064	11064	11064	11064	11064	8851	11064	11064	11064
Permitted average input speed (at T_{2N} and 20 °C ambient temperature) [d)]			n_{1N}	n_{1T}	3100	3100	3100	3100	3100	3100	3100	3500	3100	3500	4200	4200	4200	4200
Max. input speed			n_{1Max}	*rpm*	4500	4500	4500	4500	4500	4500	4500	4500	4500	4500	4500	4500	4500	4500
Mean no load running torque [b)] (at n_1 = 3000 rpm and 20 °C gearbox temperature)			T_{012}	*Nm*	0.7	0.4	0.6	0.5	0.5	0.4	0.3	0.3	0.3	0.3	0.3	0.3	0.3	0.3
				in.lb	6	4	5	4	4	4	3	3	3	3	3	3	3	3
Max. backlash			j_t	*arcmin*	Standard ≤ 4 / Reduced ≤ 2													
Torsional rigidity [b)]			C_{t21}	*Nm/arcmin*	91	87	111	119	111	119	111	119	123	127	95	115	125	112
				in.lb/arcmin	805	770	982	1053	982	1053	982	1053	1089	1124	841	1018	1106	991
Tilting rigidity			C_{2K}	*Nm/arcmin*	560													
				in.lb/arcmin	4956													
Max. axial force [c)]			F_{2AMax}	*N*	6130													
				lb_f	1379													
Max. tilting moment			M_{2KMax}	*Nm*	1295													
				in.lb	11462													
Efficiency at full load			η	%	92													
Service life			L_h	*h*	> 20000													
Weight (incl. standard adapter plate)			*m*	*kg*	18.7													
				lb_m	41													
Operating noise (at reference ratio and reference speed – ratio-specific values available in cymex®)			L_{PA}	*dB(A)*	≤ 68													
Max. permitted housing temperature				*°C*	+90													
				F	194													
Ambient temperature				*°C*	0 to +40													
				F	32 to 104													
Lubrication					Lubricated for life													
Direction of rotation					In- and output opposite direction													
Protection class					IP 65													
Metal bellows coupling (recommended product type – validate sizing with cymex®)					BCT - 00300AAX - 080.000													
Bore diameter of coupling on the application side				*mm*	X = 024.000 - 060.000													
Mass moment of inertia (relates to the drive) Clamping hub diameter [mm]	E	19	J_1	$kgcm^2$	1.01	0.76	0.88	0.85	0.76	0.75	0.7	0.69	0.7	0.69	0.69	0.69	0.69	0.69
				10^{-3} $in.lb.s^2$	0.89	0.67	0.78	0.75	0.67	0.66	0.62	0.61	0.62	0.61	0.61	0.61	0.61	0.61
	G	24	J_1	$kgcm^2$	2.57	2.32	2.44	2.42	2.32	2.31	2.26	2.25	2.26	2.25	2.25	2.25	2.25	2.25
				10^{-3} $in.lb.s^2$	2.27	2.05	2.16	2.14	2.05	2.04	2	1.99	2	1.99	1.99	1.99	1.99	1.99

Please use our sizing software cymex® for a detailed sizing – **www.wittenstein-cymex.com**
Please contact us for optimum sizing at S1 conditions (Continuous operation).

[a)] At max. 10 % M_{2KMax}
[b)] Valid for standard clamping hub diameter
[c)] Refers to center of the output shaft or flange
[d)] Please reduce input speed at higher ambient temperatures

View A

Motor shaft diameter [mm]

3-stage

up to 19/24 [4] (E[5]/G) clamping hub diameter

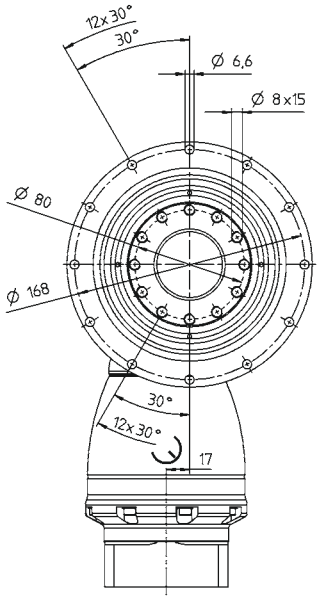

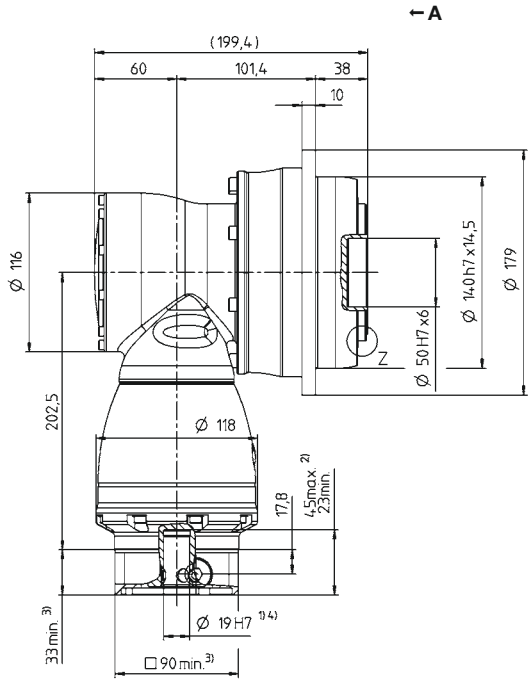

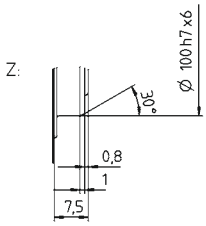

See technical data sheet for available clamping hub diameters (mass moment of inertia). Dimensions available on request.

Non-tolerated dimensions are nominal dimensions
[1] Check motor shaft fit
[2] Min./Max. permissible motor shaft length. Longer motor shafts are possible, please contact alpha.
[3] The dimensions depend on the motor
[4] Smaller motor shaft diameter is compensated by a bushing with a minimum thickness of 1 mm
[5] Standard clamping hub diameter

TPK+ 110 MF 2-stage

			2-stage										
Ratio	i		**12**	**16**	**20**	**25**	**28**	**35**	**40**	**49**	**50**	**70**	**100**
Max. torque [a) b)]	T_{2a}	*Nm*	1440	1440	1800	1800	2520	2520	840	1750	1050	1470	2100
		in.lb	12745	12745	15931	15931	22304	22304	7435	15489	9293	13011	18587
Max. acceleration torque [b)] (max. 1000 cycles per hour)	T_{2B}	*Nm*	1200	1200	1500	1500	1920	1920	840	1750	1050	1470	1680
		in.lb	10621	10621	13276	13276	16994	16994	7435	15489	9293	13011	14869
Nominal torque (at n_{1N})	T_{2N}	*Nm*	700	700	750	750	750	750	640	750	750	750	750
		in.lb	6196	6196	6638	6638	6638	6638	5665	6638	6638	6638	6638
Emergency stop torque [a) b)] (permitted 1000 times during the service life of the gearbox)	T_{2Not}	*Nm*	1600	2000	2500	2500	3075	3075	1600	3075	2000	2800	3075
		in.lb	14161	17702	22127	22127	27216	27216	14161	27216	17702	24782	27216
Permitted average input speed (at T_{2N} and 20 °C ambient temperature) [d)]	n_{1N}	n_{1T}	1600	1900	1900	2100	1900	2100	2100	2100	2100	2100	2100
Max. input speed	n_{1Max}	*rpm*	5000	5000	5000	5000	5000	5000	5000	5000	5000	5000	5000
Mean no load running torque [b)] (at n_1 = 3000 rpm and 20 °C gearbox temperature)	T_{012}	*Nm*	9	6.5	6.5	5.5	6	8	6	8	6	6	6
		in.lb	80	58	58	49	53	71	53	71	53	53	53
Max. backlash	j_t	*arcmin*	Standard ≤ 4 / Reduced ≤ 2										
Torsional rigidity [b)]	C_{t21}	*Nm/arcmin*	253	269	336	346	400	407	274	410	341	404	389
		in.lb/arcmin	2239	2381	2974	3062	3540	3602	2425	3629	3018	3576	3443
Tilting rigidity	C_{2K}	*Nm/arcmin*	1452										
		in.lb/arcmin	12851										
Max. axial force [c)]	F_{2AMax}	*N*	10050										
		lb_f	2261										
Max. tilting moment	M_{2KMax}	*Nm*	3064										
		in.lb	27119										
Efficiency at full load	η	%	94										
Service life	L_h	*h*	> 20000										
Weight (incl. standard adapter plate)	m	*kg*	41										
		lb_m	91										
Operating noise (at reference ratio and reference speed – ratio-specific values available in cymex®)	L_{PA}	*dB(A)*	≤ 70										
Max. permitted housing temperature		*°C*	+90										
		F	194										
Ambient temperature		*°C*	0 to +40										
		F	32 to 104										
Lubrication			Lubricated for life										
Direction of rotation			In- and output opposite direction										
Protection class			IP 65										
Metal bellows coupling (recommended product type – validate sizing with cymex®)			BCT - 01500AAX - 125.000										
Bore diameter of coupling on the application side		*mm*	X = 050.000 - 080.000										
Mass moment of inertia (relates to the drive) K 38 Clamping hub diameter [mm]	J_1	*kgcm²*	24.3	19	18.7	16.1	18.5	15.7	12.8	17.5	12.7	12.7	12.7
		10^{-3} in.lb.s²	21.51	16.82	16.55	14.25	16.37	13.89	11.33	15.49	11.24	11.24	11.24

Please use our sizing software cymex® for a detailed sizing – **www.wittenstein-cymex.com**
Please contact us for optimum sizing at S1 conditions (Continuous operation).

[a)] At max. 10 % M_{2KMax}
[b)] Valid for standard clamping hub diameter
[c)] Refers to center of the output shaft or flange
[d)] Please reduce input speed at higher ambient temperatures

View A

Motor shaft diameter [mm]

2-stage

up to 38 [4] (K)[5] clamping hub diameter

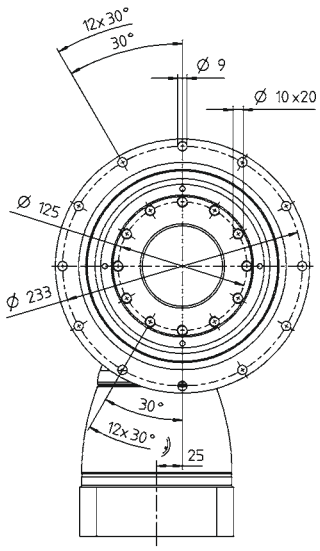

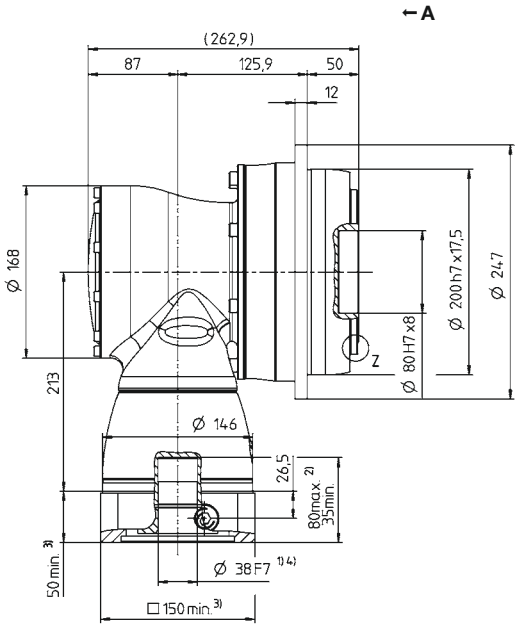

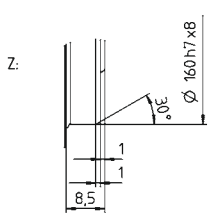

See technical data sheet for available clamping hub diameters (mass moment of inertia). Dimensions available on request.

Non-tolerated dimensions are nominal dimensions
[1] Check motor shaft fit
[2] Min. / Max. permissible motor shaft length. Longer motor shafts are possible, please contact alpha.
[3] The dimensions depend on the motor
[4] Smaller motor shaft diameter is compensated by a bushing with a minimum thickness of 1 mm
[5] Standard clamping hub diameter

TPK+ 110 MF 3-stage

			3-stage													
Ratio	*i*		**64**	**84**	**100**	**125**	**140**	**175**	**200**	**250**	**280**	**350**	**400**	**500**	**700**	**1000**
Max. torque [a) b)]	T_{2a}	*Nm*	1440	1440	1800	1800	1800	1800	1800	1800	2520	2520	1008	1260	1764	2240
		in.lb	12745	12745	15931	15931	15931	15931	15931	15931	22304	22304	8922	11152	15613	19826
Max. acceleration torque [b)] (max. 1000 cycles per hour)	T_{2B}	*Nm*	1200	1200	1500	1500	1500	1500	1500	1500	1920	1920	840	1050	1470	1680
		in.lb	10621	10621	13276	13276	13276	13276	13276	13276	16994	16994	7435	9293	13011	14869
Nominal torque (at n_{1N})	T_{2N}	*Nm*	700	700	950	950	950	950	950	950	1120	1250	640	750	1120	800
		in.lb	6196	6196	8408	8408	8408	8408	8408	8408	9913	11064	5665	6638	9913	7081
Emergency stop torque [a) b)] (permitted 1000 times during the service life of the gearbox)	T_{2Not}	*Nm*	2000	1600	2500	2500	2500	2500	2500	2500	3075	3075	1600	2000	2800	3075
		in.lb	17702	14161	22127	22127	22127	22127	22127	22127	27216	27216	14161	17702	24782	27216
Permitted average input speed (at T_{2N} and 20 °C ambient temperature) [d)]	n_{1N}	n_{1T}	2900	2900	2900	2900	2900	2900	2900	3200	2900	3200	3900	3900	3900	3900
Max. input speed	n_{1Max}	*rpm*	4500	4500	4500	4500	4500	4500	4500	4500	4500	4500	4500	4500	4500	4500
Mean no load running torque [b)] (at n_1 = 3000 rpm and 20 °C gearbox temperature)	T_{012}	*Nm*	1	0.5	0.8	0.6	0.6	0.5	0.5	0.4	0.5	0.4	0.4	0.4	0.4	0.4
		in.lb	9	4	7	5	5	4	4	4	4	4	4	4	4	4
Max. backlash	j_t	*arcmin*	Standard ≤ 4 / Reduced ≤ 2													
Torsional rigidity [b)]	C_{t21}	*Nm/arcmin*	269	252	336	346	336	346	336	346	400	407	274	341	404	389
		in.lb/arcmin	2381	2230	2974	3062	2974	3062	2974	3062	3540	3602	2425	3018	3576	3443
Tilting rigidity	C_{2K}	*Nm/arcmin*	1452													
		in.lb/arcmin	12851													
Max. axial force [c)]	F_{2AMax}	*N*	10050													
		lb_f	2261													
Max. tilting moment	M_{2KMax}	*Nm*	3064													
		in.lb	27119													
Efficiency at full load	η	*%*	92													
Service life	L_h	*h*	> 20000													
Weight (incl. standard adapter plate)	*m*	*kg*	45.4													
		lb_m	100													
Operating noise (at reference ratio and reference speed – ratio-specific values available in cymex®)	L_{PA}	*dB(A)*	≤ 70													
Max. permitted housing temperature		*°C*	+90													
		F	194													
Ambient temperature		*°C*	0 to +40													
		F	32 to 104													
Lubrication			Lubricated for life													
Direction of rotation			In- and output opposite direction													
Protection class			IP 65													
Metal bellows coupling (recommended product type – validate sizing with cymex®)			BCT - 01500AAX - 125.000													
Bore diameter of coupling on the application side		*mm*	X = 050.000 - 080.000													
Mass moment of inertia (relates to the drive) G 24	J_1	$kgcm^2$	3.97	2.82	3.36	3.22	2.82	2.75	2.5	2.47	2.5	2.44	2.42	2.42	2.42	2.42
		10^{-3} $in.lb.s^2$	3.51	2.5	2.97	2.85	2.5	2.43	2.21	2.19	2.21	2.16	2.14	2.14	2.14	2.14
Clamping hub diameter [mm] K 38	J_1	$kgcm^2$	10.9	9.74	10.3	10.1	9.74	9.66	9.41	9.38	9.41	9.38	9.33	9.33	9.33	9.33
		10^{-3} $in.lb.s^2$	9.65	8.62	9.12	8.94	8.62	8.55	8.33	8.3	8.33	8.3	8.26	8.26	8.26	8.26

Please use our sizing software cymex® for a detailed sizing – **www.wittenstein-cymex.com**
Please contact us for optimum sizing at S1 conditions (Continuous operation).

[a)] At max. 10 % M_{2KMax}
[b)] Valid for standard clamping hub diameter
[c)] Refers to center of the output shaft or flange
[d)] Please reduce input speed at higher ambient temperatures

View A

Motor shaft diameter [mm]

3-stage

up to 24/38 [4] (G[5]/K) clamping hub diameter

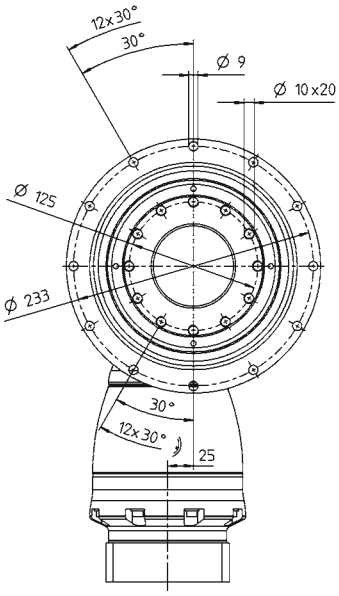

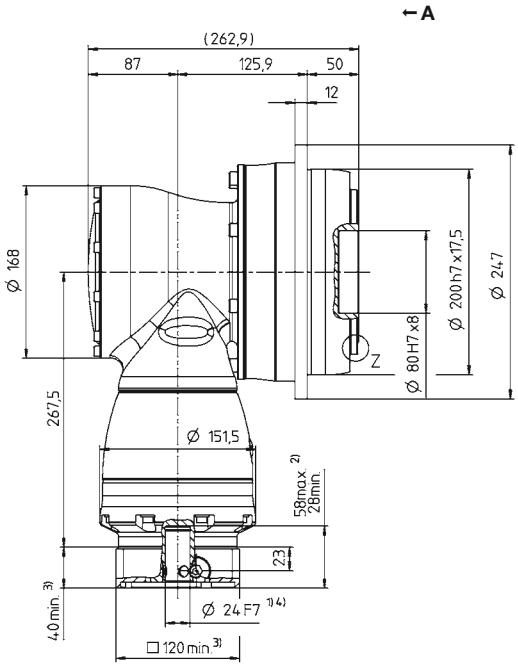

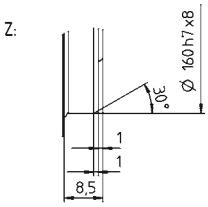

See technical data sheet for available clamping hub diameters (mass moment of inertia). Dimensions available on request.

Non-tolerated dimensions are nominal dimensions

1) Check motor shaft fit
2) Min./Max. permissible motor shaft length. Longer motor shafts are possible, please contact alpha.
3) The dimensions depend on the motor
4) Smaller motor shaft diameter is compensated by a bushing with a minimum thickness of 1 mm
5) Standard clamping hub diameter

TPK+ 300 MF 2-stage

			2-stage							
Ratio	i		**15**	**20**	**25**	**35**	**49**	**50**	**70**	**100**
Max. torque [a) b)]	T_{2a}	*Nm*	3840	3840	3840	5250	3840	2350	3290	2800
		in.lb	33987	33987	33987	46467	33987	20799	29119	24782
Max. acceleration torque [b)] (max. 1000 cycles per hour)	T_{2B}	*Nm*	3200	3200	3200	3960	3850	2350	3290	2280
		in.lb	28323	28323	28323	35049	34076	20799	29119	20180
Nominal torque (at n_{1N})	T_{2N}	*Nm*	2000	2000	2000	1800	1800	1800	1800	1600
		in.lb	17702	17702	17702	15931	15931	15931	15931	14161
Emergency stop torque [a) b)] (permitted 1000 times during the service life of the gearbox)	T_{2Not}	*Nm*	4500	5250	5250	7350	6790	4500	6300	8750
		in.lb	39829	46467	46467	65053	60097	39829	55760	77445
Permitted average input speed (at T_{2N} and 20 °C ambient temperature) [d)]	n_{1N}	n_{1T}	1500	1700	1900	1900	1700	1700	1700	1700
Max. input speed	n_{1Max}	*rpm*	4500	4500	4500	4500	4500	4500	4500	4500
Mean no load running torque [b)] (at n_1 = 3000 rpm and 20 °C gearbox temperature)	T_{012}	*Nm*	18.5	15	13	12	12	15	14	13
		in.lb	164	133	115	106	106	133	124	115
Max. backlash	j_t	*arcmin*	Standard ≤ 4 / Reduced ≤ 2							
Torsional rigidity [b)]	C_{t21}	*Nm/arcmin*	615	640	664	730	728	658	727	642
		in.lb/arcmin	5443	5665	5877	6461	6443	5824	6435	5682
Tilting rigidity	C_{2K}	*Nm/arcmin*	5560							
		in.lb/arcmin	49210							
Max. axial force [c)]	F_{2AMax}	*N*	33000							
		lb_f	7425							
Max. tilting moment	M_{2KMax}	*Nm*	5900							
		in.lb	52220							
Efficiency at full load	η	%	94							
Service life	L_h	*h*	> 20000							
Weight (incl. standard adapter plate)	*m*	*kg*	83							
		lb_m	183							
Operating noise (at reference ratio and reference speed – ratio-specific values available in cymex®)	L_{PA}	*dB(A)*	≤ 71							
Max. permitted housing temperature		*°C*	+90							
		F	194							
Ambient temperature		*°C*	0 to +40							
		F	32 to 104							
Lubrication			Lubricated for life							
Direction of rotation			In- and output opposite direction							
Protection class			IP 65							
Metal bellows coupling (recommended product type – validate sizing with cymex®)			-							
Bore diameter of coupling on the application side		*mm*	-							
Mass moment of inertia (relates to the drive) Clamping hub diameter [mm] M 48	J_1	*kgcm²*	74	52	43	43	35	30	30	30
		10⁻³ in.lb.s²	65.49	46.02	38.06	38.06	30.98	26.55	26.55	26.55

Please use our sizing software cymex® for a detailed sizing – **www.wittenstein-cymex.com**
Please contact us for optimum sizing at S1 conditions (Continuous operation).

[a)] At max. 10 % M_{2KMax}
[b)] Valid for standard clamping hub diameter
[c)] Refers to center of the output shaft or flange
[d)] Please reduce input speed at higher ambient temperatures

View A

Motor shaft diameter [mm]

2-stage

up to 48 [4] (M)[5]
clamping hub
diameter

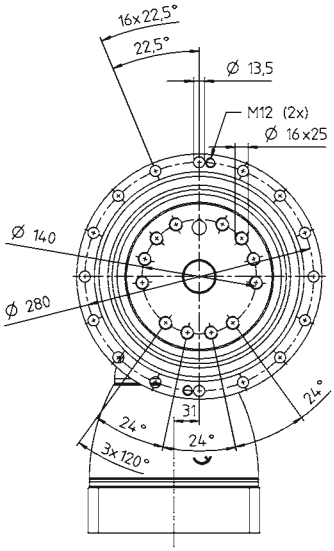

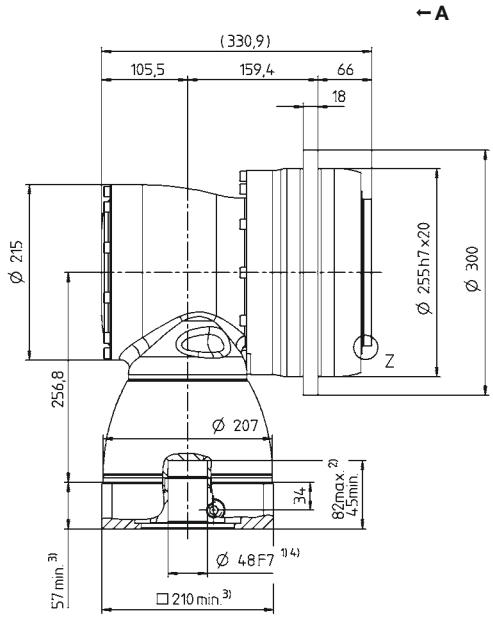

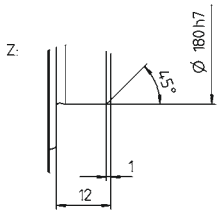

See technical data sheet for available clamping hub diameters (mass moment of inertia). Dimensions available on request.

Non-tolerated dimensions are nominal dimensions
[1] Check motor shaft fit
[2] Min. / Max. permissible motor shaft length. Longer motor shafts are possible, please contact alpha.
[3] The dimensions depend on the motor
[4] Smaller motor shaft diameter is compensated by a bushing with a minimum thickness of 1 mm
[5] Standard clamping hub diameter

TPK+ 300 MF 3-stage

			3-stage											
Ratio	i		**63**	**100**	**125**	**140**	**175**	**200**	**250**	**280**	**350**	**500**	**700**	**1000**
Max. torque [a) b)]	T_{2a}	*Nm*	5250	3840	3840	3840	3840	3840	3840	5250	5250	2820	3948	2800
		in.lb	46467	33987	33987	33987	33987	33987	33987	46467	46467	24959	34943	24782
Max. acceleration torque [b)] (max. 1000 cycles per hour)	T_{2B}	*Nm*	3960	3200	3200	3200	3200	3200	3200	3960	3960	2350	3290	2280
		in.lb	35049	28323	28323	28323	28323	28323	28323	35049	35049	20799	29119	20180
Nominal torque (at n_{1N})	T_{2N}	*Nm*	1800	2000	2000	2000	2000	2000	2000	1800	1800	1800	1800	1600
		in.lb	15931	17702	17702	17702	17702	17702	17702	15931	15931	15931	15931	14161
Emergency stop torque [a) b)] (permitted 1000 times during the service life of the gearbox)	T_{2Not}	*Nm*	6300	5250	5250	5250	5250	5250	5250	7350	7350	4500	6300	8750
		in.lb	55760	46467	46467	46467	46467	46467	46467	65053	65053	39829	55760	77445
Permitted average input speed (at T_{2N} and 20 °C ambient temperature) [d)]	n_{1N}	n_{1T}	2700	2700	2700	2700	2700	2700	2900	2700	2900	3400	3400	3400
Max. input speed	n_{1Max}	*rpm*	4000	4000	4000	4000	4000	4000	4000	4000	4000	4000	4000	4000
Mean no load running torque [b)] (at n_1 = 3000 rpm and 20 °C gearbox temperature)	T_{012}	*Nm*	5.4	3	2.5	2.1	1.9	1.5	1.4	1.3	1.2	1.1	1.1	1
		in.lb	48	27	22	19	17	13	12	12	11	10	10	9
Max. backlash	j_t	*arcmin*	Standard ≤ 4 / Reduced ≤ 2											
Torsional rigidity [b)]	C_{t21}	*Nm/arcmin*	699	640	664	640	664	640	664	715	730	658	727	642
		in.lb/arcmin	6187	5665	5877	5665	5877	5665	5877	6328	6461	5824	6435	5682
Tilting rigidity	C_{2K}	*Nm/arcmin*	5560											
		in.lb/arcmin	49210											
Max. axial force [c)]	F_{2AMax}	*N*	33000											
		lb_f	7425											
Max. tilting moment	M_{2KMax}	*Nm*	5900											
		in.lb	52220											
Efficiency at full load	η	%	92											
Service life	L_h	*h*	> 20000											
Weight (incl. standard adapter plate)	m	*kg*	87											
		lb_m	192											
Operating noise (at reference ratio and reference speed – ratio-specific values available in cymex®)	L_{PA}	*dB(A)*	≤ 71											
Max. permitted housing temperature		°C	+90											
		F	194											
Ambient temperature		°C	0 to +40											
		F	32 to 104											
Lubrication			Lubricated for life											
Direction of rotation			In- and output opposite direction											
Protection class			IP 65											
Metal bellows coupling (recommended product type – validate sizing with cymex®)			-											
Bore diameter of coupling on the application side		*mm*	-											
Mass moment of inertia (relates to the drive) Clamping hub diameter [mm] K 38	J_1	$kgcm^2$	17.8	14.1	12.1	11	10.8	10.2	10.1	10.1	10	9.9	9.9	9.9
		10^{-3} $in.lb.s^2$	15.75	12.48	10.71	9.74	9.56	9.03	8.94	8.94	8.85	8.76	8.76	8.76
M 48	J_1	$kgcm^2$	32.5	28.8	26.8	25.7	25.5	24.9	24.8	24.9	24.8	24.6	24.6	24.6
		10^{-3} $in.lb.s^2$	28.76	25.49	23.72	22.74	22.57	22.04	21.95	22.04	21.95	21.77	21.77	21.77

Please use our sizing software cymex® for a detailed sizing – **www.wittenstein-cymex.com**
Please contact us for optimum sizing at S1 conditions (Continuous operation).

[a)] At max. 10 % M_{2KMax}
[b)] Valid for standard clamping hub diameter
[c)] Refers to center of the output shaft or flange
[d)] Please reduce input speed at higher ambient temperatures

View A

Motor shaft diameter [mm]

3-stage

up to 38/48 [4] (K[5]/M) clamping hub diameter

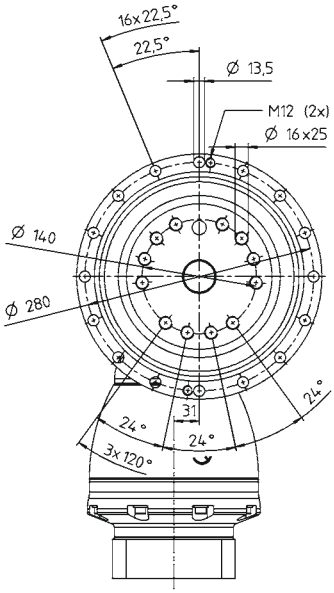

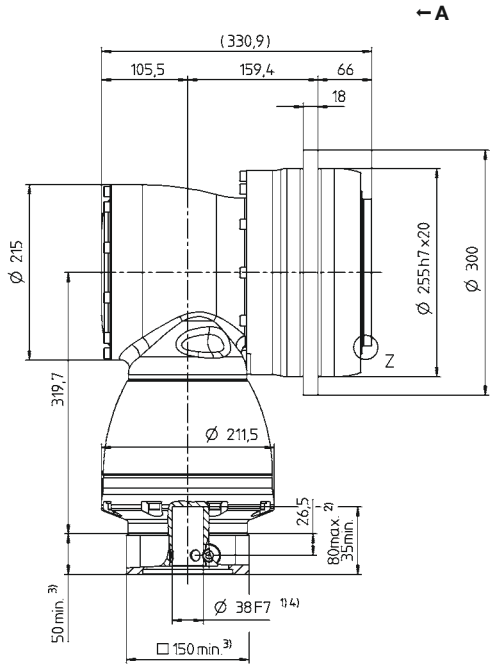

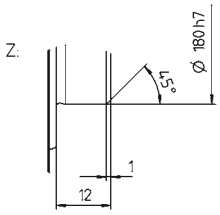

See technical data sheet for available clamping hub diameters (mass moment of inertia). Dimensions available on request.

Non-tolerated dimensions are nominal dimensions
1) Check motor shaft fit
2) Min./Max. permissible motor shaft length. Longer motor shafts are possible, please contact alpha.
3) The dimensions depend on the motor
4) Smaller motor shaft diameter is compensated by a bushing with a minimum thickness of 1 mm
5) Standard clamping hub diameter

TPK+ 500 MF 3-stage

			3-stage									
Ratio	i		**100**	**125**	**140**	**175**	**200**	**250**	**350**	**500**	**700**	**1000**
Max. torque [a) b)]	T_{2a}	*Nm*	5446	6808	5200	6250	4200	5250	6808	4975	5500	4800
		in.lb	48201	60256	46024	55318	37173	46467	60256	44033	48679	42484
Max. acceleration torque [b)] (max. 1000 cycles per hour)	T_{2B}	*Nm*	5446	6808	5000	6250	4200	5250	6808	4975	5500	4800
		in.lb	48201	60256	44254	55318	37173	46467	60256	44033	48679	42484
Nominal torque (at n_{1N})	T_{2N}	*Nm*	3350	3800	3350	3800	3350	3800	3800	2900	2800	2900
		in.lb	29650	33633	29650	33633	29650	33633	33633	25667	24782	25667
Emergency stop torque [a) b)] (permitted 1000 times during the service life of the gearbox)	T_{2Not}	*Nm*	10000	12500	9000	11250	8000	10000	14000	15000	15000	15000
		in.lb	88508	110635	79657	99572	70806	88508	123911	132762	132762	132762
Permitted average input speed (at T_{2N} and 20 °C ambient temperature) [d)]	n_{1N}	n_{1T}	2100	2100	1900	1900	1900	1900	1900	1900	1900	1900
Max. input speed	n_{1Max}	*rpm*	5000	5000	5000	5000	5000	5000	5000	5000	5000	5000
Mean no load running torque [b)] (at n_1 = 3000 rpm and 20 °C gearbox temperature)	T_{012}	*Nm*	5.5	5.5	8.5	8.5	6	6	6	6	6	6
		in.lb	49	49	75	75	53	53	53	53	53	53
Max. backlash	j_t	*arcmin*	Standard ≤ 3.3 / Reduced ≤ 2.3									
Torsional rigidity [b)]	C_{t21}	*Nm/arcmin*	1250	1350	1250	1350	1250	1350	1350	1280	1240	1050
		in.lb/arcmin	11064	11949	11064	11949	11064	11949	11949	11329	10975	9293
Tilting rigidity	C_{2K}	*Nm/arcmin*	9480									
		in.lb/arcmin	83906									
Max. axial force [c)]	F_{2AMax}	*N*	50000									
		lb_f	11250									
Max. tilting moment	M_{2KMax}	*Nm*	8800									
		in.lb	77887									
Efficiency at full load	η	%	92									
Service life	L_h	*h*	> 20000									
Weight (incl. standard adapter plate)	m	*kg*	96									
		lb_m	212									
Operating noise (at reference ratio and reference speed – ratio-specific values available in cymex®)	L_{PA}	*dB(A)*	≤ 71									
Max. permitted housing temperature		°C	+90									
		F	194									
Ambient temperature		°C	0 to +40									
		F	32 to 104									
Lubrication			Lubricated for life									
Direction of rotation			In- and output opposite direction									
Protection class			IP 65									
Metal bellows coupling (recommended product type – validate sizing with cymex®)			-									
Bore diameter of coupling on the application side		*mm*	-									
Mass moment of inertia (relates to the drive) Clamping hub diameter [mm] K 38	J_1	$kgcm^2$	16.7	16.7	15.5	16.5	16.4	16.4	16.4	16.4	16.4	16.4
		10^{-3} *in.lb.s²*	14.78	14.78	13.72	14.6	14.51	14.51	14.51	14.51	14.51	14.51

Please use our sizing software cymex® for a detailed sizing – **www.wittenstein-cymex.com**
Please contact us for optimum sizing at S1 conditions (Continuous operation).

[a)] At max. 10 % M_{2KMax}
[b)] Valid for standard clamping hub diameter
[c)] Refers to center of the output shaft or flange
[d)] Please reduce input speed at higher ambient temperatures

View A

Motor shaft diameter [mm]

3-stage

up to 38 [4] (K)[5] clamping hub diameter

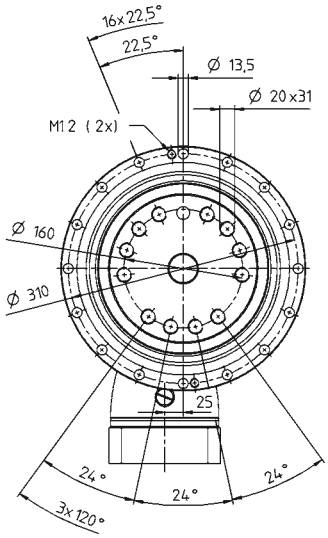

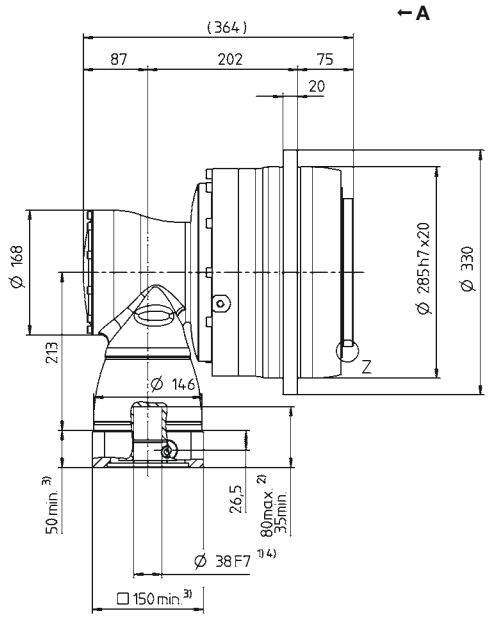

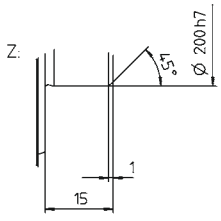

See technical data sheet for available clamping hub diameters (mass moment of inertia). Dimensions available on request.

Non-tolerated dimensions are nominal dimensions
1) Check motor shaft fit
2) Min. / Max. permissible motor shaft length. Longer motor shafts are possible, please contact alpha.
3) The dimensions depend on the motor
4) Smaller motor shaft diameter is compensated by a bushing with a minimum thickness of 1 mm
5) Standard clamping hub diameter

TPK+ 500 MF 4-stage i=180-1000

			4-stage											
Ratio	*i*		**180**	**240**	**300**	**375**	**420**	**500**	**560**	**600**	**700**	**800**	**875**	**1000**
Max. torque [a) b)]	T_{2a}	*Nm*	5446	5446	5446	6808	5446	5446	5446	5446	5446	5446	5446	5446
		in.lb	48201	48201	48201	60256	48201	48201	48201	48201	48201	48201	48201	48201
Max. acceleration torque [b)] (max. 1000 cycles per hour)	T_{2B}	*Nm*	5446	5446	5446	6808	5446	5446	5446	5446	5446	5446	6808	5446
		in.lb	48201	48201	48201	60256	48201	48201	48201	48201	48201	48201	60256	48201
Nominal torque (at n_{1N})	T_{2N}	*Nm*	3350	335	3350	3800	3350	3350	3350	3350	3350	3350	3800	3350
		in.lb	29650	2965	29650	33633	29650	29650	29650	29650	29650	29650	33633	29650
Emergency stop torque [a) b)] (permitted 1000 times during the service life of the gearbox)	T_{2Not}	*Nm*	8000	8000	8000	10000	8000	10000	10000	8000	10000	10000	1250	10000
		in.lb	70806	70806	70806	88508	70806	88508	88508	70806	88508	88508	11064	88508
Permitted average input speed (at T_{2N} and 20 °C ambient temperature) [d)]	n_{1N}	n_{1T}	2700	2900	2900	2900	2900	2900	2900	2900	2900	2900	2900	3200
Max. input speed	n_{1Max}	*rpm*	4500	4500	4500	4500	4500	4500	4500	4500	4500	4500	4500	4500
Mean no load running torque [b)] (at n_1 = 3000 rpm and 20 °C gearbox temperature)	T_{012}	*Nm*	3.4	2.5	1.6	1.4	1.1	1	1	0.8	0.8	0.7	0.7	0.6
		in.lb	30	22	14	12	10	9	9	7	7	6	6	5
Max. backlash	j_t	*arcmin*	Standard ≤ 3.3 / Reduced ≤ 2.3											
Torsional rigidity [b)]	C_{t21}	*Nm/arcmin*	1250	1250	1250	1300	1250	1350	1250	1250	1262	1250	1350	1250
		in.lb/arcmin	11064	11064	11064	11506	11064	11949	11064	11064	11170	11064	11949	11064
Tilting rigidity	C_{2K}	*Nm/arcmin*	9480											
		in.lb/arcmin	83906											
Max. axial force [c)]	F_{2AMax}	*N*	50000											
		lb_f	11250											
Max. tilting moment	M_{2KMax}	*Nm*	8800											
		in.lb	77887											
Efficiency at full load	η	%	90											
Service life	L_h	*h*	> 20000											
Weight (incl. standard adapter plate)	*m*	*kg*	99											
		lb_m	219											
Operating noise (at reference ratio and reference speed – ratio-specific values available in cymex®)	L_{PA}	*dB(A)*	≤ 71											
Max. permitted housing temperature		*°C*	+90											
		F	194											
Ambient temperature		*°C*	0 to +40											
		F	32 to 104											
Lubrication			Lubricated for life											
Direction of rotation			In- and output opposite direction											
Protection class			IP 65											
Metal bellows coupling (recommended product type – validate sizing with cymex®)			-											
Bore diameter of coupling on the application side		*mm*	-											
Mass moment of inertia (relates to the drive) Clamping hub diameter [mm] G 24	J_1	$kgcm^2$	5.93	4.29	3.33	3.32	2.81	3.19	2.8	2.5	2.74	2.49	2.74	2.46
		10^{-3} $in.lb.s^2$	5.25	3.8	2.95	2.94	2.49	2.82	2.48	2.21	2.42	2.2	2.42	2.18
Mass moment of inertia (relates to the drive) Clamping hub diameter [mm] K 38	J_1	$kgcm^2$	12.84	11.18	10.24	10.23	9.72	10.1	9.71	9.41	9.65	9.4	9.65	9.37
		10^{-3} $in.lb.s^2$	11.36	9.89	9.06	9.05	8.6	8.94	8.59	8.33	8.54	8.32	8.54	8.29

Please use our sizing software cymex® for a detailed sizing – **www.wittenstein-cymex.com**
Please contact us for optimum sizing at S1 conditions (Continuous operation).

[a)] At max. 10 % M_{2KMax}
[b)] Valid for standard clamping hub diameter
[c)] Refers to center of the output shaft or flange
[d)] Please reduce input speed at higher ambient temperatures

View A

Motor shaft diameter [mm]

4-stage

up to 24/38 [4] (G[5]/K) clamping hub diameter

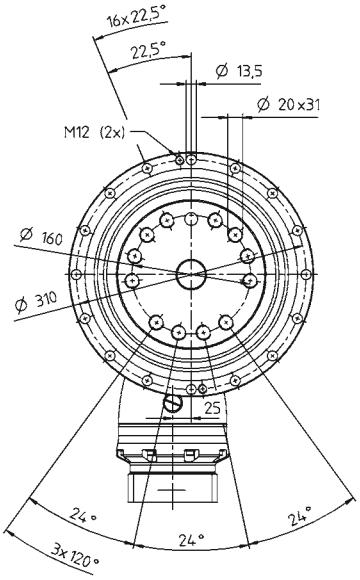

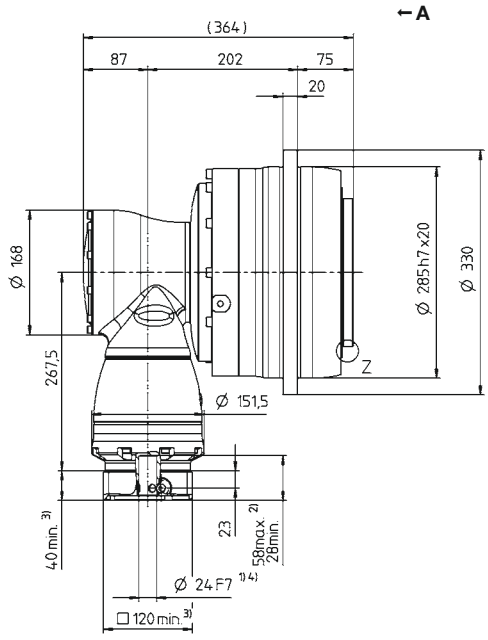

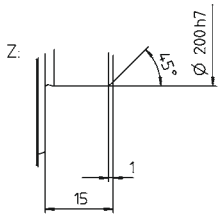

See technical data sheet for available clamping hub diameters (mass moment of inertia). Dimensions available on request.

Non-tolerated dimensions are nominal dimensions
1) Check motor shaft fit
2) Min./Max. permissible motor shaft length. Longer motor shafts are possible, please contact alpha.
3) The dimensions depend on the motor
4) Smaller motor shaft diameter is compensated by a bushing with a minimum thickness of 1 mm
5) Standard clamping hub diameter

TPK+ 500 MF 4-stage i=1125-10000

				4-stage								
Ratio			*i*	**1225**	**1400**	**1750**	**2000**	**2800**	**3500**	**5000**	**7000**	**10000**
Max. torque [a) b)]			T_{2a}	*Nm*	6808	6808	6808	5040	7056	6808	4975	5500	4800
				in.lb	60256	60256	60256	44608	62451	60256	44033	48679	42484
Max. acceleration torque [b)] (max. 1000 cycles per hour)			T_{2B}	*Nm*	6808	6808	6808	4200	5500	6808	4975	5500	4800
				in.lb	60256	60256	60256	37173	48679	60256	44033	48679	42484
Nominal torque (at n_{1N})			T_{2N}	*Nm*	3800	3800	3800	3200	2800	3800	2900	2800	2900
				in.lb	33633	33633	33633	28323	24782	33633	25667	24782	25667
Emergency stop torque [a) b)] (permitted 1000 times during the service life of the gearbox)			T_{2Not}	*Nm*	15000	15000	15000	8000	11200	14000	15000	15000	15000
				in.lb	132762	132762	132762	70806	99129	123911	132762	132762	132762
Permitted average input speed (at T_{2N} and 20 °C ambient temperature) [d)]			n_{1N}	n_{1T}	2900	2900	3200	3900	3900	3900	3900	3900	3900
Max. input speed			n_{1Max}	*rpm*	4500	4500	4500	4500	4500	4500	4500	4500	4500
Mean no load running torque [b)] (at n_1 = 3000 rpm and 20 °C gearbox temperature)			T_{012}	*Nm*	0.6	0.6	0.4	0.4	0.4	0.4	0.4	0.4	0.4
				in.lb	5	5	4	4	4	4	4	4	4
Max. backlash			j_t	*arcmin*	Standard ≤ 3.3 / Reduced ≤ 2.3								
Torsional rigidity [b)]			C_{t21}	*Nm/arcmin*	1350	1350	1350	1250	1250	1350	1250	1250	1050
				in.lb/arcmin	11949	11949	11949	11064	11064	11949	11064	11064	9293
Tilting rigidity			C_{2K}	*Nm/arcmin*	9480								
				in.lb/arcmin	83906								
Max. axial force [c)]			F_{2AMax}	*N*	50000								
				lb_f	11250								
Max. tilting moment			M_{2KMax}	*Nm*	8800								
				in.lb	77887								
Efficiency at full load			η	%	90								
Service life			L_h	*h*	> 20000								
Weight (incl. standard adapter plate)			*m*	*kg*	99								
				lb_m	219								
Operating noise (at reference ratio and reference speed – ratio-specific values available in cymex®)			L_{PA}	*dB(A)*	≤ 71								
Max. permitted housing temperature				*°C*	+90								
				F	194								
Ambient temperature				*°C*	0 to +40								
				F	32 to 104								
Lubrication					Lubricated for life								
Direction of rotation					In- and output opposite direction								
Protection class					IP 65								
Metal bellows coupling (recommended product type – validate sizing with cymex®)					-								
Bore diameter of coupling on the application side				*mm*	-								
Mass moment of inertia (relates to the drive) Clamping hub diameter [mm]	G	24	J_1	$kgcm^2$	2.73	2.49	2.46	2.42	2.42	2.42	2.42	2.42	2.42
				10^{-3} $in.lb.s^2$	2.42	2.2	2.18	2.14	2.14	2.14	2.14	2.14	2.14
	K	38	J_1	$kgcm^2$	9.64	9.4	9.37	9.33	9.33	9.33	9.33	9.33	9.33
				10^{-3} $in.lb.s^2$	8.53	8.32	8.29	8.26	8.26	8.26	8.26	8.26	8.26

Please use our sizing software cymex® for a detailed sizing – **www.wittenstein-cymex.com**
Please contact us for optimum sizing at S1 conditions (Continuous operation).

[a)] At max. 10 % M_{2KMax}
[b)] Valid for standard clamping hub diameter
[c)] Refers to center of the output shaft or flange
[d)] Please reduce input speed at higher ambient temperatures

View A

Motor shaft diameter [mm]

4-stage

up to 24/38 [4] (G[5]/K) clamping hub diameter

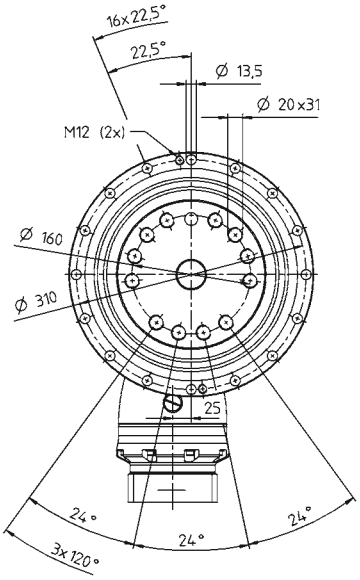

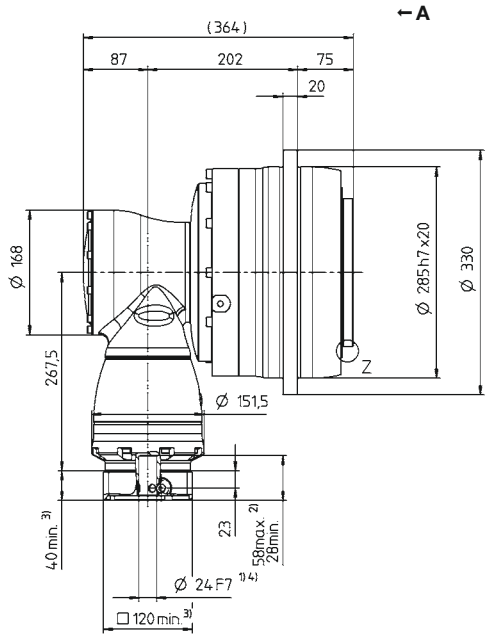

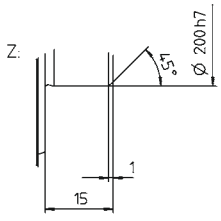

See technical data sheet for available clamping hub diameters (mass moment of inertia). Dimensions available on request.

Non-tolerated dimensions are nominal dimensions
1) Check motor shaft fit
2) Min./Max. permissible motor shaft length. Longer motor shafts are possible, please contact alpha.
3) The dimensions depend on the motor
4) Smaller motor shaft diameter is compensated by a bushing with a minimum thickness of 1 mm
5) Standard clamping hub diameter

TPK+ 025 MA 3-/4-stage

			3-stage							4-stage								
Ratio	i		**66**	**88**	**110**	**137.5**	**154**	**220**	**385**	**330**	**462**	**577.5**	**770**	**1078**	**1540**	**2695**	**3850**	**5500**
Max. torque [a) b)]	T_{2a}	*Nm*	583	583	583	583	550	440	583	583	583	583	583	583	583	583	583	583
		in.lb	5160	5160	5160	5160	4868	3894	5160	5160	5160	5160	5160	5160	5160	5160	5160	5160
Max. acceleration torque [b)] (max. 1000 cycles per hour)	T_{2B}	*Nm*	530	530	530	530	530	440	530	530	530	530	530	530	530	530	530	530
		in.lb	4691	4691	4691	4691	4691	3894	4691	4691	4691	4691	4691	4691	4691	4691	4691	4691
Nominal torque (at n_{1N})	T_{2N}	*Nm*	375	375	375	375	375	330	375	375	375	375	375	375	375	375	375	375
		in.lb	3319	3319	3319	3319	3319	2921	3319	3319	3319	3319	3319	3319	3319	3319	3319	3319
Emergency stop torque [a) b)] (permitted 1000 times during the service life of the gearbox)	T_{2Not}	*Nm*	880	1100	1100	1200	990	880	1200	880	1200	1200	1200	1200	1200	1200	1200	1200
		in.lb	7789	9736	9736	10621	8762	7789	10621	7789	10621	10621	10621	10621	10621	10621	10621	10621
Permitted average input speed (at T_{2N} and 20 °C ambient temperature) [d)]	n_{1N}	n_{1T}	2400	2600	2900	2900	2900	2900	2900	4300	4300	4300	4300	4300	4300	5400	5400	5400
Max. input speed	n_{1Max}	*rpm*	7500	7500	7500	7500	7500	7500	7500	6000	6000	6000	6000	6000	6000	6000	6000	6000
Mean no load running torque [b)] (at n_1 = 3000 rpm and 20 °C gearbox temperature)	T_{012}	*Nm*	1.6	1.4	1.2	1.2	1.4	1.2	1.2	0.3	0.3	0.2	0.2	0.2	0.1	0.1	0.1	0.1
		in.lb	14	12	11	11	12	11	11	3	3	2	2	2	1	1	1	1
Max. backlash	j_t	*arcmin*	Standard ≤ 1.3															
Torsional rigidity [b)]	C_{t21}	*Nm/arcmin*	95	95	96	99	95	94	101	95	101	98	98	102	102	101	101	98
		in.lb/arcmin	841	841	850	876	841	832	894	841	894	867	867	903	903	894	894	867
Tilting rigidity	C_{2K}	*Nm/arcmin*	550															
		in.lb/arcmin	4868															
Max. axial force [c)]	F_{2AMax}	*N*	4800															
		lb_f	1080															
Max. tilting moment	M_{2KMax}	*Nm*	550															
		in.lb	4868															
Efficiency at full load	η	%	92							90								
Service life	L_h	*h*	> 20000															
Weight (incl. standard adapter plate)	m	*kg*	8.4							8.7								
		lb_m	19							19								
Operating noise (at reference ratio and reference speed – ratio-specific values available in cymex®)	L_{PA}	*dB(A)*	≤ 66															
Max. permitted housing temperature		*°C*	+90															
		F	194															
Ambient temperature		*°C*	0 to +40															
		F	32 to 104															
Lubrication			Lubricated for life															
Direction of rotation			In- and output opposite direction															
Protection class			IP 65															
Metal bellows coupling (recommended product type – validate sizing with cymex®)			BCT - 00300AAX - 063.000															
Bore diameter of coupling on the application side		*mm*	X = 030.000 - 056.000															
Mass moment of inertia (relates to the drive) Clamping hub diameter [mm] — B 11	J_1	$kgcm^2$	-	-	-	-	-	-	-	0.08	0.09	0.06	0.06	0.06	0.06	0.06	0.06	0.06
		10^{-3} $in.lb.s^2$	-	-	-	-	-	-	-	0.07	0.08	0.05	0.05	0.05	0.05	0.05	0.05	0.05
C 14	J_1	$kgcm^2$	0.56	0.46	0.41	0.4	0.37	0.35	0.34	0.19	0.2	0.18	0.18	0.18	0.17	0.17	0.17	0.17
		10^{-3} $in.lb.s^2$	0.5	0.41	0.36	0.35	0.33	0.31	0.3	0.17	0.18	0.16	0.16	0.16	0.15	0.15	0.15	0.15
E 19	J_1	$kgcm^2$	0.91	0.81	0.76	0.76	0.72	0.7	0.7	-	-	-	-	-	-	-	-	-
		10^{-3} $in.lb.s^2$	0.81	0.72	0.67	0.67	0.64	0.62	0.62	-	-	-	-	-	-	-	-	-

Please use our sizing software cymex® for a detailed sizing – **www.wittenstein-cymex.com**
Please contact us for optimum sizing at S1 conditions (Continuous operation).

a) At max. 10 % M_{2KMax}
b) Valid for standard clamping hub diameter
c) Refers to center of the output shaft or flange
d) Please reduce input speed at higher ambient temperatures

View A

3-stage

up to 14/19 [4] (C [5]/E) clamping hub diameter

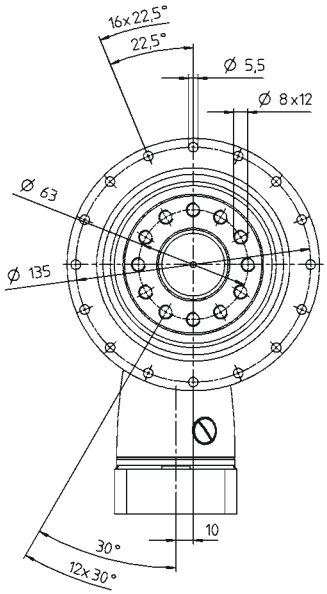

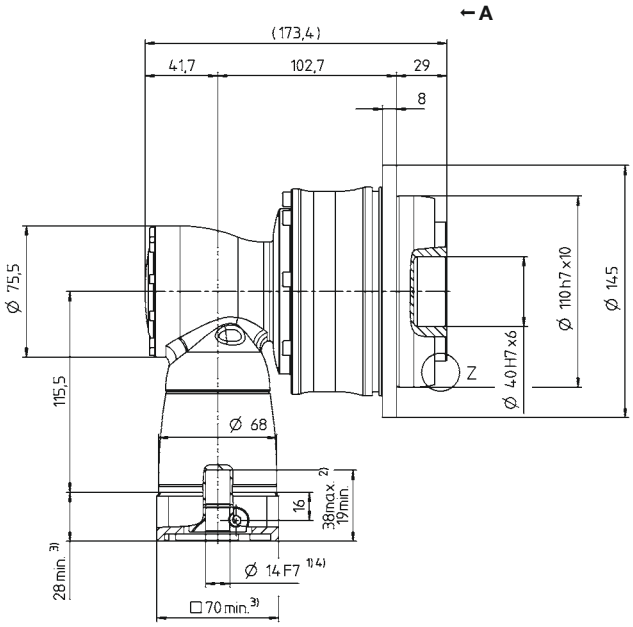

4-stage

up to 11/14 [4] (B [5]/C) clamping hub diameter

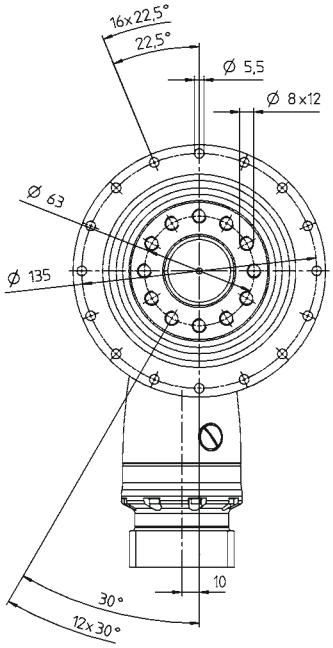

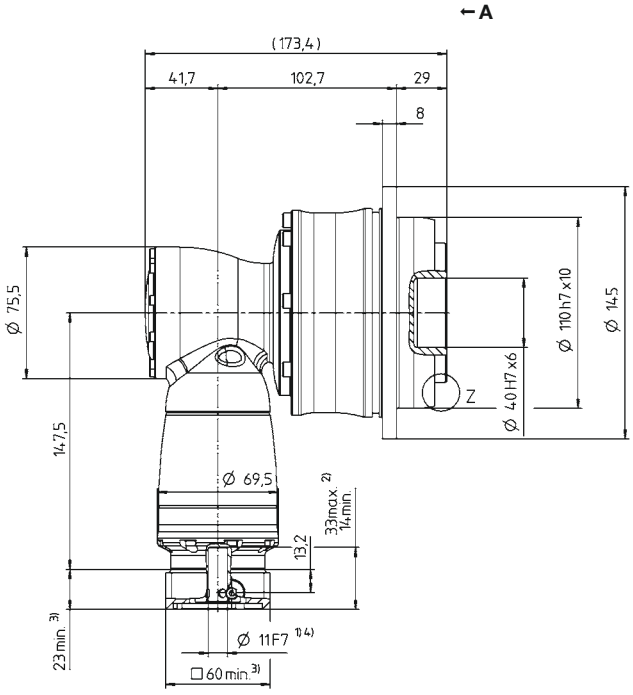

Z:

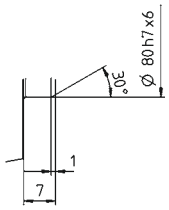

Motor shaft diameter [mm]

See technical data sheet for available clamping hub diameters (mass moment of inertia). Dimensions available on request.

Non-tolerated dimensions are nominal dimensions
1) Check motor shaft fit
2) Min./Max. permissible motor shaft length. Longer motor shafts are possible, please contact alpha.
3) The dimensions depend on the motor
4) Smaller motor shaft diameter is compensated by a bushing with a minimum thickness of 1 mm
5) Standard clamping hub diameter

TPK+ 050 MA 3-/4-stage

			3-stage							4-stage								
Ratio	*i*		**66**	**88**	**110**	**137.5**	**154**	**220**	**385**	**330**	**462**	**577.5**	**770**	**1078**	**1540**	**2695**	**3850**	**5500**
Max. torque [a) b)]	T_{2a}	*Nm*	1402	1402	1402	1402	1320	1100	1402	1402	1402	1402	1402	1402	1402	1402	1402	1402
		in.lb	12409	12409	12409	12409	11683	9736	12409	12409	12409	12409	12409	12409	12409	12409	12409	12409
Max. acceleration torque [b)] (max. 1000 cycles per hour)	T_{2B}	*Nm*	992	992	992	992	992	992	992	992	992	992	992	992	992	992	992	992
		in.lb	8780	8780	8780	8780	8780	8780	8780	8780	8780	8780	8780	8780	8780	8780	8780	8780
Nominal torque (at n_{1N})	T_{2N}	*Nm*	675	675	675	675	675	675	675	675	675	675	675	675	675	675	675	675
		in.lb	5974	5974	5974	5974	5974	5974	5974	5974	5974	5974	5974	5974	5974	5974	5974	5974
Emergency stop torque [a) b)] (permitted 1000 times during the service life of the gearbox)	T_{2Not}	*Nm*	2090	2375	2375	2375	2375	2375	2375	2090	2375	2375	2375	2375	2375	2375	2375	2375
		in.lb	18498	21021	21021	21021	21021	21021	21021	18498	21021	21021	21021	21021	21021	21021	21021	21021
Permitted average input speed (at T_{2N} and 20 °C ambient temperature) [d)]	n_{1N}	n_{1T}	2200	2400	2700	2700	2700	2700	2700	3400	3400	3400	3400	3400	3400	4400	4400	4400
Max. input speed	n_{1Max}	*rpm*	7500	7500	7500	7500	7500	7500	7500	6000	6000	6000	6000	6000	6000	6000	6000	6000
Mean no load running torque [b)] (at n_1 = 3000 rpm and 20 °C gearbox temperature)	T_{012}	*Nm*	2.9	2.4	2	2.1	2.4	2.1	2	0.4	0.5	0.3	0.3	0.3	0.2	0.1	0.1	0.1
		in.lb	26	21	18	19	21	19	18	4	4	3	3	3	2	1	1	1
Max. backlash	j_t	*arcmin*	Standard ≤ 1.3															
Torsional rigidity [b)]	C_{t21}	*Nm/arcmin*	202	203	205	210	205	205	215	202	214	208	209	214	214	215	215	217
		in.lb/arcmin	1788	1797	1814	1859	1814	1814	1903	1788	1894	1841	1850	1894	1894	1903	1903	1921
Tilting rigidity	C_{2K}	*Nm/arcmin*	560															
		in.lb/arcmin	4956															
Max. axial force [c)]	F_{2AMax}	*N*	6130															
		lb_f	1379															
Max. tilting moment	M_{2KMax}	*Nm*	1335															
		in.lb	11816															
Efficiency at full load	η	%	92							90								
Service life	L_h	*h*	> 20000															
Weight (incl. standard adapter plate)	*m*	*kg*	16.9							17.5								
		lb_m	37							39								
Operating noise (at reference ratio and reference speed – ratio-specific values available in cymex®)	L_{PA}	*dB(A)*	≤ 68															
Max. permitted housing temperature		*°C*	+90															
		F	194															
Ambient temperature		*°C*	0 to +40															
		F	32 to 104															
Lubrication			Lubricated for life															
Direction of rotation			In- and output opposite direction															
Protection class			IP 65															
Metal bellows coupling (recommended product type – validate sizing with cymex®)			BCT - 00300AAX - 080.000															
Bore diameter of coupling on the application side		*mm*	X = 045.000 - 056.000															
Mass moment of inertia (relates to the drive) Clamping hub diameter [mm]	C 14 J_1	*kgcm²*	-	-	-	-	-	-	-	0.24	0.29	0.2	0.2	0.2	0.19	0.18	0.18	0.18
		10^{-3} in.lb.s²	-	-	-	-	-	-	-	0.21	0.26	0.18	0.18	0.18	0.17	0.16	0.16	0.16
	E 19 J_1	*kgcm²*	1.65	1.3	1.13	1.11	0.99	0.91	0.9	0.68	0.73	0.63	0.63	0.63	0.63	0.63	0.63	0.63
		10^{-3} in.lb.s²	1.46	1.15	1	0.98	0.88	0.81	0.8	0.6	0.65	0.56	0.56	0.56	0.56	0.56	0.56	0.56
	H 28 J_1	*kgcm²*	3.07	2.71	2.54	2.53	2.4	2.53	2.32	-	-	-	-	-	-	-	-	-
		10^{-3} in.lb.s²	2.72	2.4	2.25	2.24	2.12	2.24	2.05	-	-	-	-	-	-	-	-	-

Please use our sizing software cymex® for a detailed sizing – **www.wittenstein-cymex.com**
Please contact us for optimum sizing at S1 conditions (Continuous operation).

a) At max. 10 % M_{2KMax}
b) Valid for standard clamping hub diameter
c) Refers to center of the output shaft or flange
d) Please reduce input speed at higher ambient temperatures

3-stage

up to 19/28 [4] (E[5]/H) clamping hub diameter

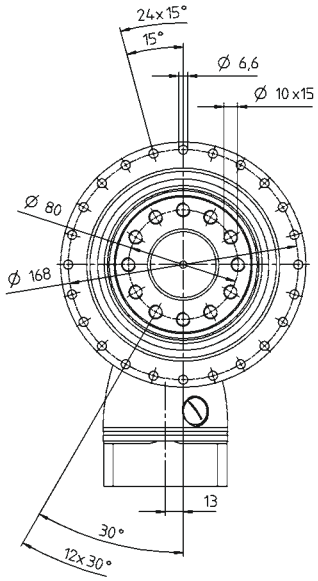

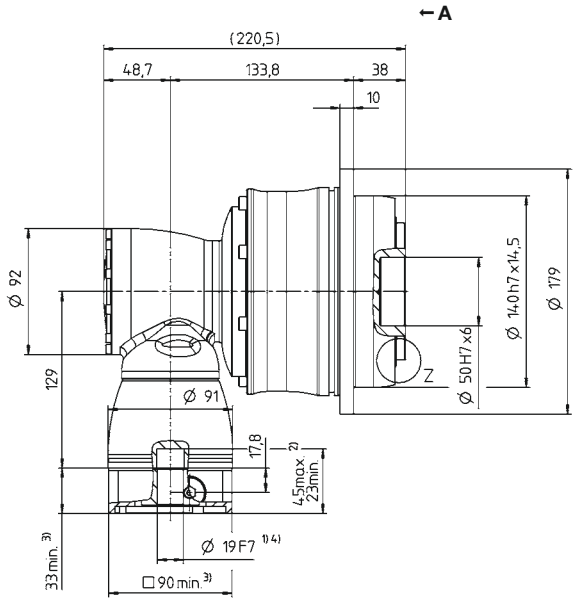

4-stage

up to 14/19 [4] (C[5]/E) clamping hub diameter

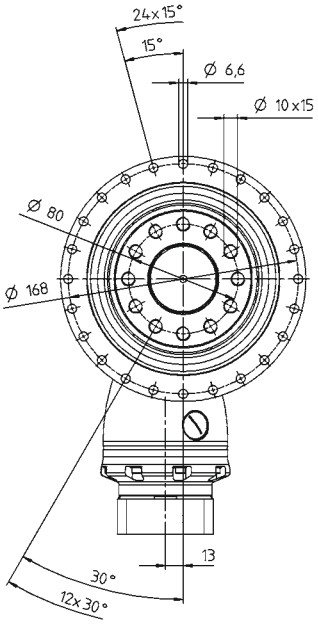

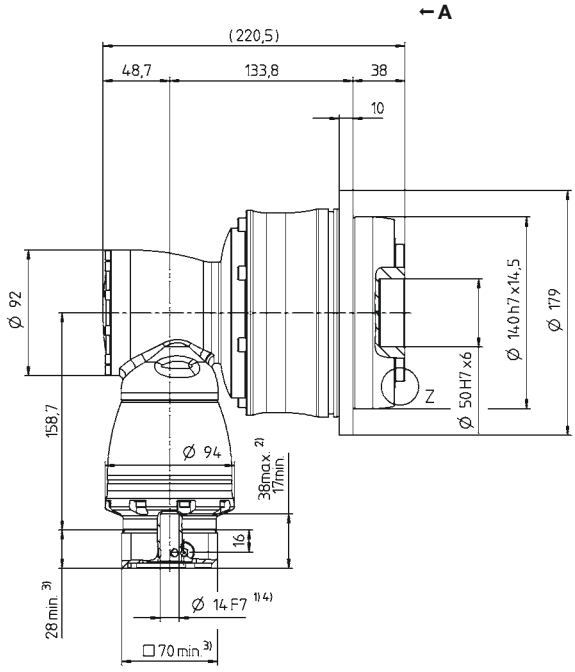

Z:

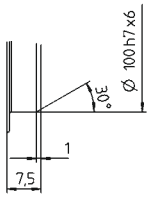

Motor shaft diameter [mm]

See technical data sheet for available clamping hub diameters (mass moment of inertia). Dimensions available on request.

Non-tolerated dimensions are nominal dimensions
1) Check motor shaft fit
2) Min./Max. permissible motor shaft length. Longer motor shafts are possible, please contact alpha.
3) The dimensions depend on the motor
4) Smaller motor shaft diameter is compensated by a bushing with a minimum thickness of 1 mm
5) Standard clamping hub diameter

TPK+ 110 MA 3-/4-stage

			3-stage							4-stage								
Ratio	*i*		**66**	**88**	**110**	**137.5**	**154**	**220**	**385**	**330**	**462**	**577.5**	**770**	**1078**	**1540**	**2695**	**3850**	**5500**
Max. torque [a) b)]	T_{2a}	*Nm*	3822	3822	3822	3822	3190	2750	3822	3822	3822	3822	3822	3822	3822	3822	3822	3200
		in.lb	33828	33828	33828	33828	28234	24340	33828	33828	33828	33828	33828	33828	33828	33828	33828	28323
Max. acceleration torque [b)] (max. 1000 cycles per hour)	T_{2B}	*Nm*	3100	3100	3100	3100	3100	2750	3100	3100	3100	3100	3100	3100	3100	3100	3100	2400
		in.lb	27437	27437	27437	27437	27437	24340	27437	27437	27437	27437	27437	27437	27437	27437	27437	21242
Nominal torque (at n_{1N})	T_{2N}	*Nm*	1650	1650	1650	1650	1650	1650	1650	1650	1650	1650	1650	1650	1650	1650	1650	1400
		in.lb	14604	14604	14604	14604	14604	14604	14604	14604	14604	14604	14604	14604	14604	14604	14604	12391
Emergency stop torque [a) b)] (permitted 1000 times during the service life of the gearbox)	T_{2Not}	*Nm*	4840	5720	5720	6500	5610	5500	6500	4840	6500	6050	6500	6500	6500	6500	6500	6500
		in.lb	42838	50627	50627	57530	49653	48679	57530	42838	57530	53547	57530	57530	57530	57530	57530	57530
Permitted average input speed (at T_{2N} and 20 °C ambient temperature) [d)]	n_{1N}	n_{1T}	2100	2300	2600	2600	2400	2400	2400	3000	3000	3000	3000	3000	3000	4100	4100	4100
Max. input speed	n_{1Max}	*rpm*	5500	5500	5500	5500	5500	5500	5500	4500	4500	4500	4500	4500	4500	4500	4500	4500
Mean no load running torque [b)] (at n_1 = 3000 rpm and 20 °C gearbox temperature)	T_{012}	*Nm*	6	4.6	3.6	3.4	4.4	3.5	3.3	0.9	1	0.7	0.6	0.6	0.3	0.3	0.2	0.2
		in.lb	53	41	32	30	39	31	29	8	9	6	5	5	3	3	2	2
Max. backlash	j_t	*arcmin*	Standard ≤ 1.3															
Torsional rigidity [b)]	C_{t21}	*Nm/arcmin*	634	642	654	675	654	648	687	634	682	662	667	685	685	689	687	658
		in.lb/arcmin	5611	5682	5788	5974	5788	5735	6080	5611	6036	5859	5903	6063	6063	6098	6080	5824
Tilting rigidity	C_{2K}	*Nm/arcmin*	1452															
		in.lb/arcmin	12851															
Max. axial force [c)]	F_{2AMax}	*N*	10050															
		lb_f	2261															
Max. tilting moment	M_{2KMax}	*Nm*	3280															
		in.lb	29031															
Efficiency at full load	η	%	92							90								
Service life	L_h	*h*	> 20000															
Weight (incl. standard adapter plate)	*m*	*kg*	39.9							40.6								
		lb_m	88							90								
Operating noise (at reference ratio and reference speed – ratio-specific values available in cymex®)	L_{PA}	*dB(A)*	≤ 70															
Max. permitted housing temperature		*°C*	+90															
		F	194															
Ambient temperature		*°C*	0 to +40															
		F	32 to 104															
Lubrication			Lubricated for life															
Direction of rotation			In- and output opposite direction															
Protection class			IP 65															
Metal bellows coupling (recommended product type – validate sizing with cymex®)			BCT - 01500AAX - 125.000															
Bore diameter of coupling on the application side		*mm*	X = 055.000 - 070.000															
Mass moment of inertia (relates to the drive) Clamping hub diameter [mm] — E 19	J_1	$kgcm^2$	-	-	-	-	-	-	-	0.89	1.06	0.76	0.76	0.76	0.69	0.68	0.68	0.68
		10^{-3} $in.lb.s^2$	-	-	-	-	-	-	-	0.79	0.94	0.67	0.67	0.67	0.61	0.6	0.6	0.6
G 24	J_1	$kgcm^2$	-	-	-	-	-	-	-	2.46	2.63	2.33	2.32	2.32	2.26	2.25	2.25	2.25
		10^{-3} $in.lb.s^2$	-	-	-	-	-	-	-	2.18	2.33	2.06	2.05	2.05	2	1.99	1.99	1.99
H 28	J_1	$kgcm^2$	5.48	4.27	3.64	3.58	3.14	2.87	2.84	-	-	-	-	-	-	-	-	-
		10^{-3} $in.lb.s^2$	4.85	3.78	3.22	3.17	2.78	2.54	2.51	-	-	-	-	-	-	-	-	-
K 38	J_1	$kgcm^2$	12.72	11.52	10.89	10.83	10.39	10.12	10.09	-	-	-	-	-	-	-	-	-
		10^{-3} $in.lb.s^2$	11.26	10.2	9.64	9.58	9.2	8.96	8.93	-	-	-	-	-	-	-	-	-

Please use our sizing software cymex® for a detailed sizing – **www.wittenstein-cymex.com**
Please contact us for optimum sizing at S1 conditions (Continuous operation).

[a)] At max. 10 % M_{2KMax}
[b)] Valid for standard clamping hub diameter
[c)] Refers to center of the output shaft or flange
[d)] Please reduce input speed at higher ambient temperatures

View A

Motor shaft diameter [mm]

3-stage

up to 28/38 [4] (H[5]/K) clamping hub diameter

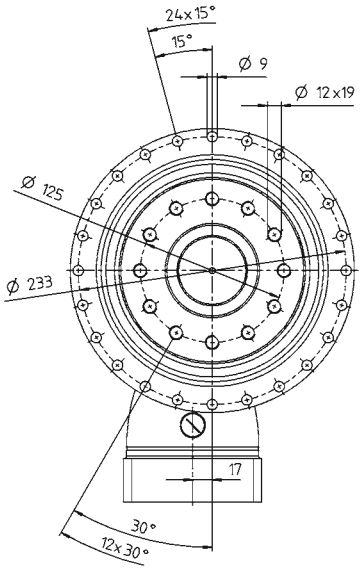

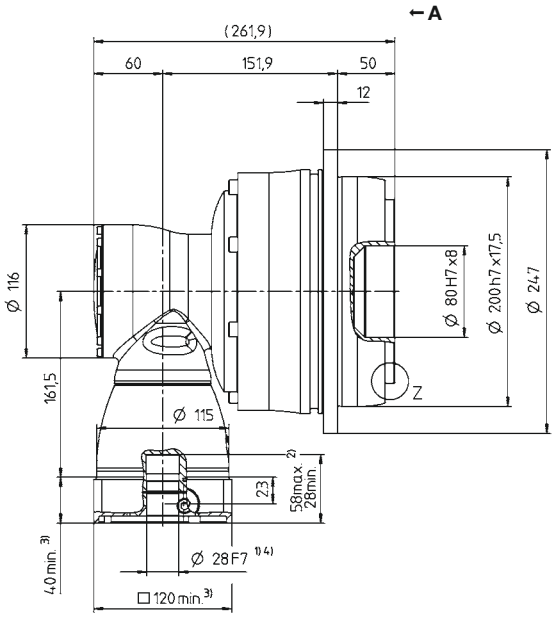

4-stage

up to 19/24 [4] (E[5]/G) clamping hub diameter

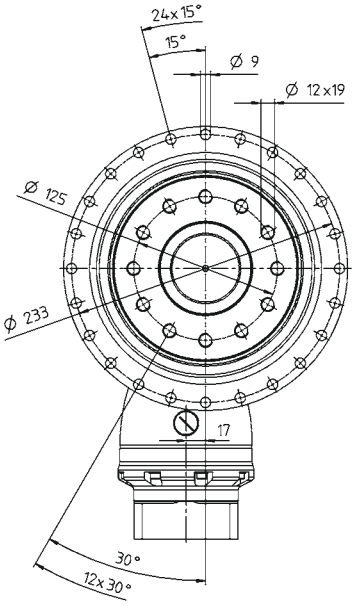

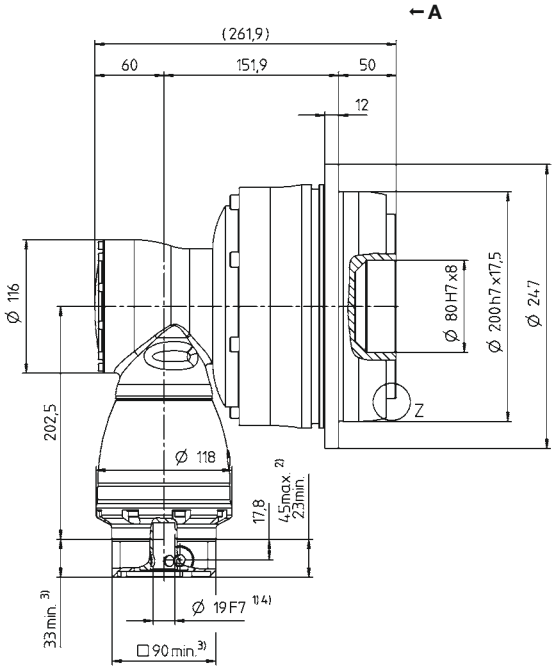

Z:

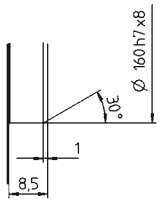

See technical data sheet for available clamping hub diameters (mass moment of inertia). Dimensions available on request.

Non-tolerated dimensions are nominal dimensions
1) Check motor shaft fit
2) Min./Max. permissible motor shaft length. Longer motor shafts are possible, please contact alpha.
3) The dimensions depend on the motor
4) Smaller motor shaft diameter is compensated by a bushing with a minimum thickness of 1 mm
5) Standard clamping hub diameter

TPK+ 300 MA 3-/4-stage

			3-stage							4-stage								
Ratio	*i*		**66**	**88**	**110**	**137.5**	**154**	**220**	**385**	**330**	**462**	**577.5**	**770**	**1078**	**1540**	**2695**	**3850**	**5500**
Max. torque [a) b)]	T_{2a}	*Nm*	7535	7535	7535	7535	5500	4620	7535	7535	7535	7535	7535	7535	7535	7535	7535	5473
		in.lb	66691	66691	66691	66691	48679	40891	66691	66691	66691	66691	66691	66691	66691	66691	66691	48440
Max. acceleration torque [b)] (max. 1000 cycles per hour)	T_{2B}	*Nm*	6600	6600	6600	6600	5500	4620	6600	6600	6600	6600	6600	6600	6600	6600	6600	4680
		in.lb	58415	58415	58415	58415	48679	40891	58415	58415	58415	58415	58415	58415	58415	58415	58415	41422
Nominal torque (at n_{1N})	T_{2N}	*Nm*	3500	3500	3500	3500	3500	3500	3500	3500	3500	3500	3500	3500	3500	3500	3500	3500
		in.lb	30978	30978	30978	30978	30978	30978	30978	30978	30978	30978	30978	30978	30978	30978	30978	30978
Emergency stop torque [a) b)] (permitted 1000 times during the service life of the gearbox)	T_{2Not}	*Nm*	8800	11000	11000	13750	9900	8800	15296	8800	15296	11000	13750	15296	15296	15296	15296	15333
		in.lb	77887	97359	97359	121699	87623	77887	135382	77887	135382	97359	121699	135382	135382	135382	135382	135709
Permitted average input speed (at T_{2N} and 20 °C ambient temperature) [d)]	n_{1N}	n_{1T}	1800	1900	2100	2100	1900	1900	1900	2800	2800	2800	2800	2800	2800	3100	3800	3800
Max. input speed	n_{1Max}	*rpm*	5000	5000	5000	5000	5000	5000	5000	4500	4500	4500	4500	4500	4500	4500	4500	4500
Mean no load running torque [b)] (at n_1 = 3000 rpm and 20 °C gearbox temperature)	T_{012}	*Nm*	11	8.2	6.9	6.5	9.2	6.7	6.4	1.5	2.2	1	0.9	0.8	0.6	0.4	0.4	0.4
		in.lb	97	73	61	58	81	59	57	13	19	9	8	7	5	4	4	4
Max. backlash	j_t	*arcmin*	Standard ≤ 3.3 / Reduced ≤ 1.8															
Torsional rigidity [b)]	C_{t21}	*Nm/arcmin*	1099	1108	1114	960	1114	1111	979	1099	976	953	958	978	978	979	979	989
		in.lb/arcmin	9727	9807	9860	8497	9860	9833	8665	9727	8638	8435	8479	8656	8656	8665	8665	8753
Tilting rigidity	C_{2K}	*Nm/arcmin*	5560															
		in.lb/arcmin	49210															
Max. axial force [c)]	F_{2AMax}	*N*	33000															
		lb_f	7425															
Max. tilting moment	M_{2KMax}	*Nm*	6500															
		in.lb	57530															
Efficiency at full load	η	%	92							90								
Service life	L_h	*h*	> 20000															
Weight (incl. standard adapter plate)	*m*	*kg*	83							87								
		lb_m	183							192								
Operating noise (at reference ratio and reference speed – ratio-specific values available in cymex®)	L_{PA}	*dB(A)*	≤ 71															
Max. permitted housing temperature		*°C*	+90															
		F	194															
Ambient temperature		*°C*	0 to +40															
		F	32 to 104															
Lubrication			Lubricated for life															
Direction of rotation			In- and output opposite direction															
Protection class			IP 65															
Metal bellows coupling (recommended product type – validate sizing with cymex®)			BCT - 04000AAX - 145.000															
Bore diameter of coupling on the application side		*mm*	X = 070.000 - 100.000															
Mass moment of inertia (relates to the drive) Clamping hub diameter [mm] G 24	J_1	$kgcm^2$	-	-	-	-	-	-	-	3.32	4.24	2.8	2.79	2.79	2.49	2.43	2.42	2.42
		10^{-3} $in.lb.s^2$	-	-	-	-	-	-	-	2.94	3.75	2.48	2.47	2.47	2.2	2.15	2.14	2.14
K 38	J_1	$kgcm^2$	26.04	19.71	16.71	16.58	14.26	12.89	12.83	10.23	11.15	9.71	9.7	9.7	9.4	9.34	9.33	9.33
		10^{-3} $in.lb.s^2$	23.05	17.44	14.79	14.67	12.62	11.41	11.35	9.05	9.87	8.59	8.58	8.58	8.32	8.27	8.26	8.26

Please use our sizing software cymex® for a detailed sizing – **www.wittenstein-cymex.com**
Please contact us for optimum sizing at S1 conditions (Continuous operation).

[a)] At max. 10 % M_{2KMax}
[b)] Valid for standard clamping hub diameter
[c)] Refers to center of the output shaft or flange
[d)] Please reduce input speed at higher ambient temperatures

View A

3-stage

up to 38 [4] (K)[5] clamping hub diameter

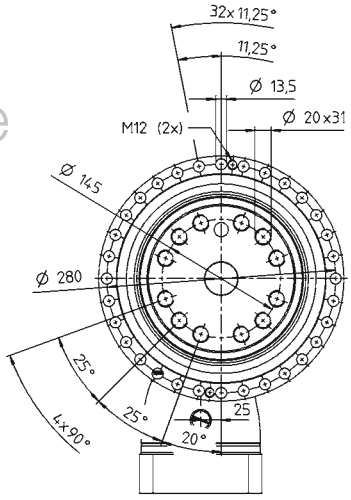

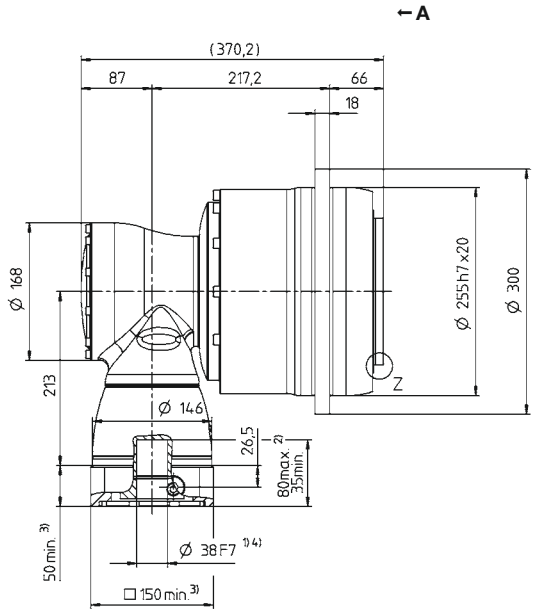

4-stage

up to 24/38 [4] (G[5]/K) clamping hub diameter

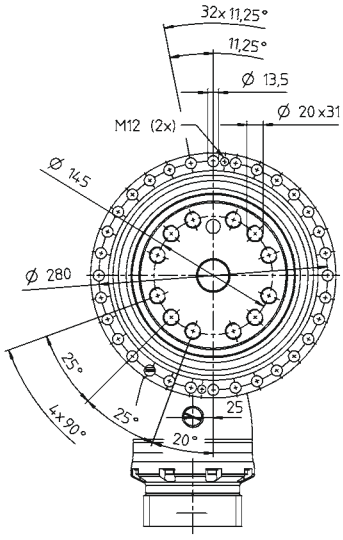

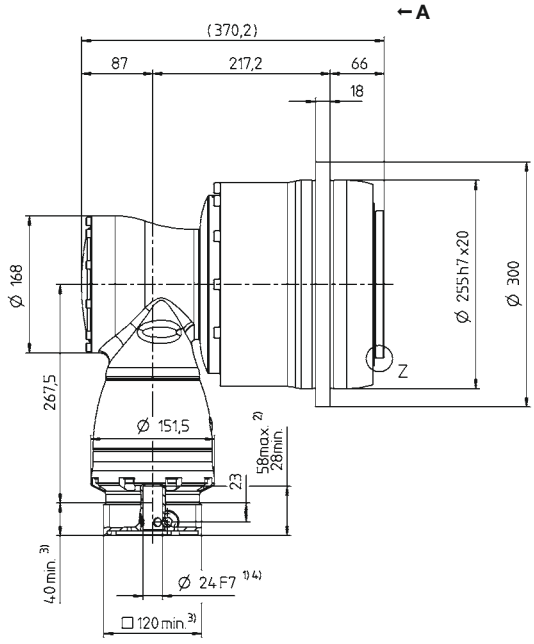

Motor shaft diameter [mm]

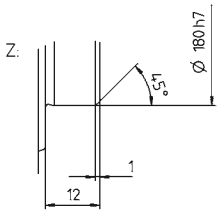

See technical data sheet for available clamping hub diameters (mass moment of inertia). Dimensions available on request.

Non-tolerated dimensions are nominal dimensions

1) Check motor shaft fit
2) Min./Max. permissible motor shaft length. Longer motor shafts are possible, please contact alpha.
3) The dimensions depend on the motor
4) Smaller motor shaft diameter is compensated by a bushing with a minimum thickness of 1 mm
5) Standard clamping hub diameter

TPK+ 500 MA 3-/4-stage

			3-stage							4-stage								
Ratio	*i*		**66**	**88**	**110**	**137.5**	**154**	**220**	**385**	**330**	**462**	**577.5**	**770**	**1078**	**1540**	**2695**	**3850**	**5500**
Max. torque [a) b)]	T_{2a}	*Nm*	10450	10450	10450	10450	10450	10340	10450	10450	10450	10450	10450	10450	10450	10450	10450	10450
		in.lb	92491	92491	92491	92491	92491	91517	92491	92491	92491	92491	92491	92491	92491	92491	92491	92491
Max. acceleration torque [b)] (max. 1000 cycles per hour)	T_{2B}	*Nm*	10450	10450	10450	10450	10450	10340	10450	10450	10450	10450	10450	10450	10450	10450	10450	8640
		in.lb	92491	92491	92491	92491	92491	91517	92491	92491	92491	92491	92491	92491	92491	92491	92491	76471
Nominal torque (at n_{1N})	T_{2N}	*Nm*	5400	5400	5400	5400	5400	5400	5400	5400	5400	5400	5400	5400	5400	5400	5400	5400
		in.lb	47794	47794	47794	47794	47794	47794	47794	47794	47794	47794	47794	47794	47794	47794	47794	47794
Emergency stop torque [a) b)] (permitted 1000 times during the service life of the gearbox)	T_{2Not}	*Nm*	19800	23100	23100	25000	21340	19800	25000	19800	25000	24750	25000	25000	25000	25000	25000	25000
		in.lb	175246	204453	204453	221270	188876	175246	221270	175246	221270	219057	221270	221270	221270	221270	221270	221270
Permitted average input speed (at T_{2N} and 20 °C ambient temperature) [d)]	n_{1N}	n_{1T}	1500	1700	1900	1900	1700	1700	1700	2600	2600	2600	2600	2600	2600	3100	3300	3300
Max. input speed	n_{1Max}	*rpm*	4500	4500	4500	4500	4500	4500	4500	4000	4000	4000	4000	4000	4000	4000	4000	4000
Mean no load running torque [b)] (at n_1 = 3000 rpm and 20 °C gearbox temperature)	T_{012}	*Nm*	18.8	15.3	12.6	12.8	16.9	13.8	13.7	2.7	4	2	1.8	1.7	1.2	1.1	1	1
		in.lb	166	135	112	113	150	122	121	24	35	18	16	15	11	10	9	9
Max. backlash	j_t	*arcmin*	Standard ≤ 3.3 / Reduced ≤ 1.8															
Torsional rigidity [b)]	C_{t21}	*Nm/arcmin*	1879	1890	1901	1747	1899	1898	1772	1879	1766	1735	1742	1770	1770	1772	1772	1786
		in.lb/arcmin	16631	16728	16825	15462	16808	16799	15684	16631	15631	15356	15418	15666	15666	15684	15684	15808
Tilting rigidity	C_{2K}	*Nm/arcmin*	9480															
		in.lb/arcmin	83906															
Max. axial force [c)]	F_{2AMax}	*N*	50000															
		lb_f	11250															
Max. tilting moment	M_{2KMax}	*Nm*	9500															
		in.lb	84083															
Efficiency at full load	η	%	92							90								
Service life	L_h	*h*	> 20000															
Weight (incl. standard adapter plate)	*m*	*kg*	120							124								
		lb_m	265							274								
Operating noise (at reference ratio and reference speed – ratio-specific values available in cymex®)	L_{PA}	*dB(A)*	≤ 71															
Max. permitted housing temperature		*°C*	+90															
		F	194															
Ambient temperature		*°C*	0 to +40															
		F	32 to 104															
Lubrication			Lubricated for life															
Direction of rotation			In- and output opposite direction															
Protection class			IP 65															
Metal bellows coupling (recommended product type – validate sizing with cymex®)			BCT - 10000AAX - 166.000															
Bore diameter of coupling on the application side		*mm*	X = 080.000 - 180.000															
Mass moment of inertia (relates to the drive) Clamping hub diameter [mm] K 38	J_1	$kgcm^2$	-	-	-	-	-	-	-	12.43	15.36	10.93	10.92	10.91	10.13	9.95	9.91	9.91
		10^{-3} $in.lb.s^2$	-	-	-	-	-	-	-	11	13.59	9.67	9.66	9.66	8.97	8.81	8.77	8.77
M 48	J_1	$kgcm^2$	75.54	52.83	42.94	42.67	34.37	29.87	29.73	27.14	30.07	25.64	25.63	25.62	24.84	24.66	24.62	24.62
		10^{-3} $in.lb.s^2$	66.85	46.75	38	37.76	30.42	26.43	26.31	24.02	26.61	22.69	22.68	22.67	21.98	21.82	21.79	21.79

Please use our sizing software cymex® for a detailed sizing – **www.wittenstein-cymex.com**
Please contact us for optimum sizing at S1 conditions (Continuous operation).

[a)] At max. 10 % M_{2KMax}
[b)] Valid for standard clamping hub diameter
[c)] Refers to center of the output shaft or flange
[d)] Please reduce input speed at higher ambient temperatures

View A

Motor shaft diameter [mm]

3-stage

up to 48 [4] (M)[5] clamping hub diameter

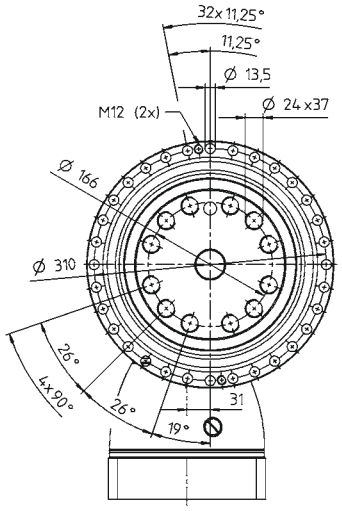

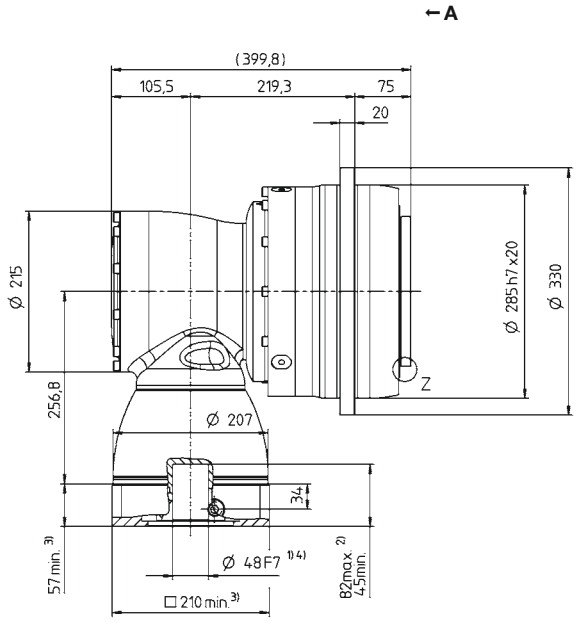

4-stage

up to 38/48 [4] (K[5] / M) clamping hub diameter

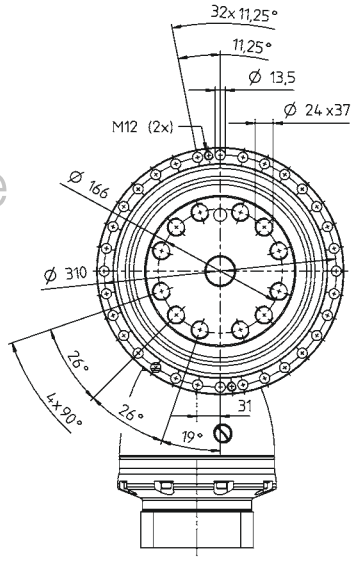

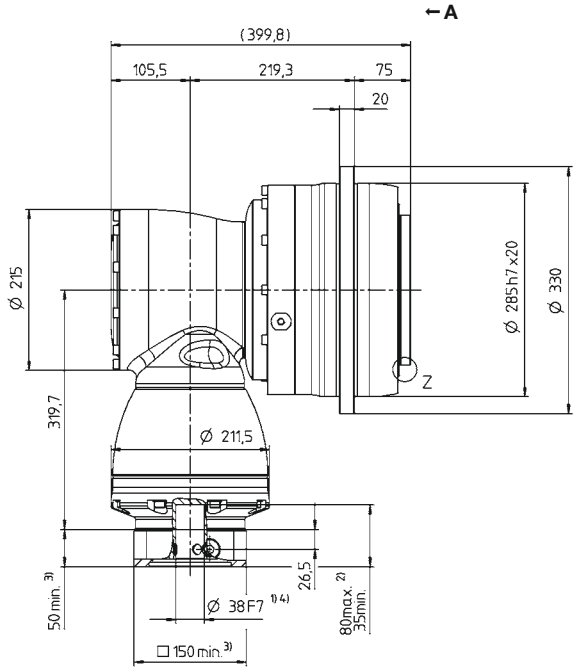

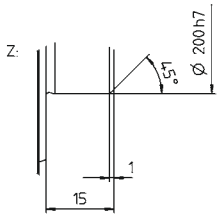

See technical data sheet for available clamping hub diameters (mass moment of inertia). Dimensions available on request.

Non-tolerated dimensions are nominal dimensions
1) Check motor shaft fit
2) Min. / Max. permissible motor shaft length. Longer motor shafts are possible, please contact alpha.
3) The dimensions depend on the motor
4) Smaller motor shaft diameter is compensated by a bushing with a minimum thickness of 1 mm
5) Standard clamping hub diameter

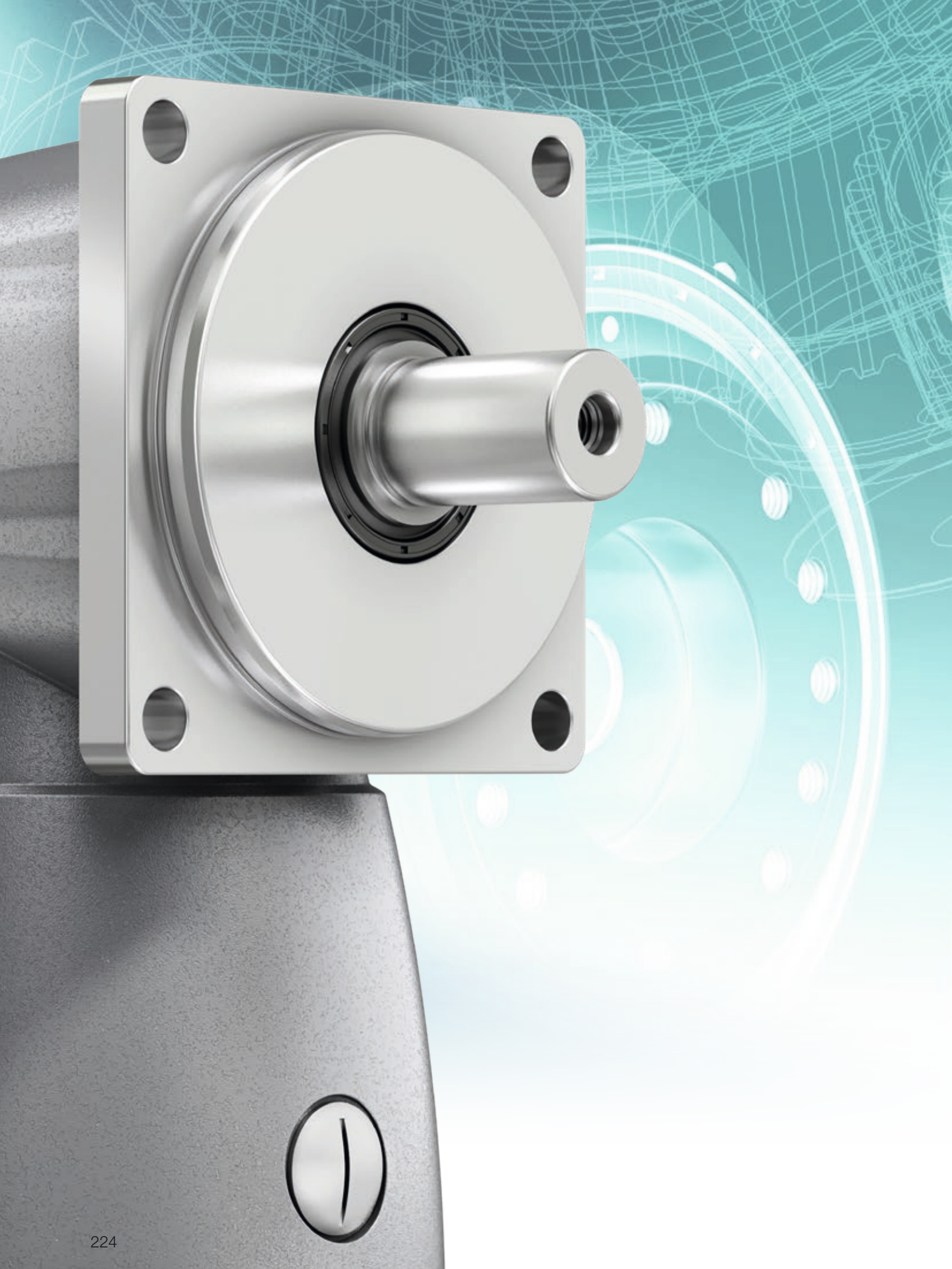

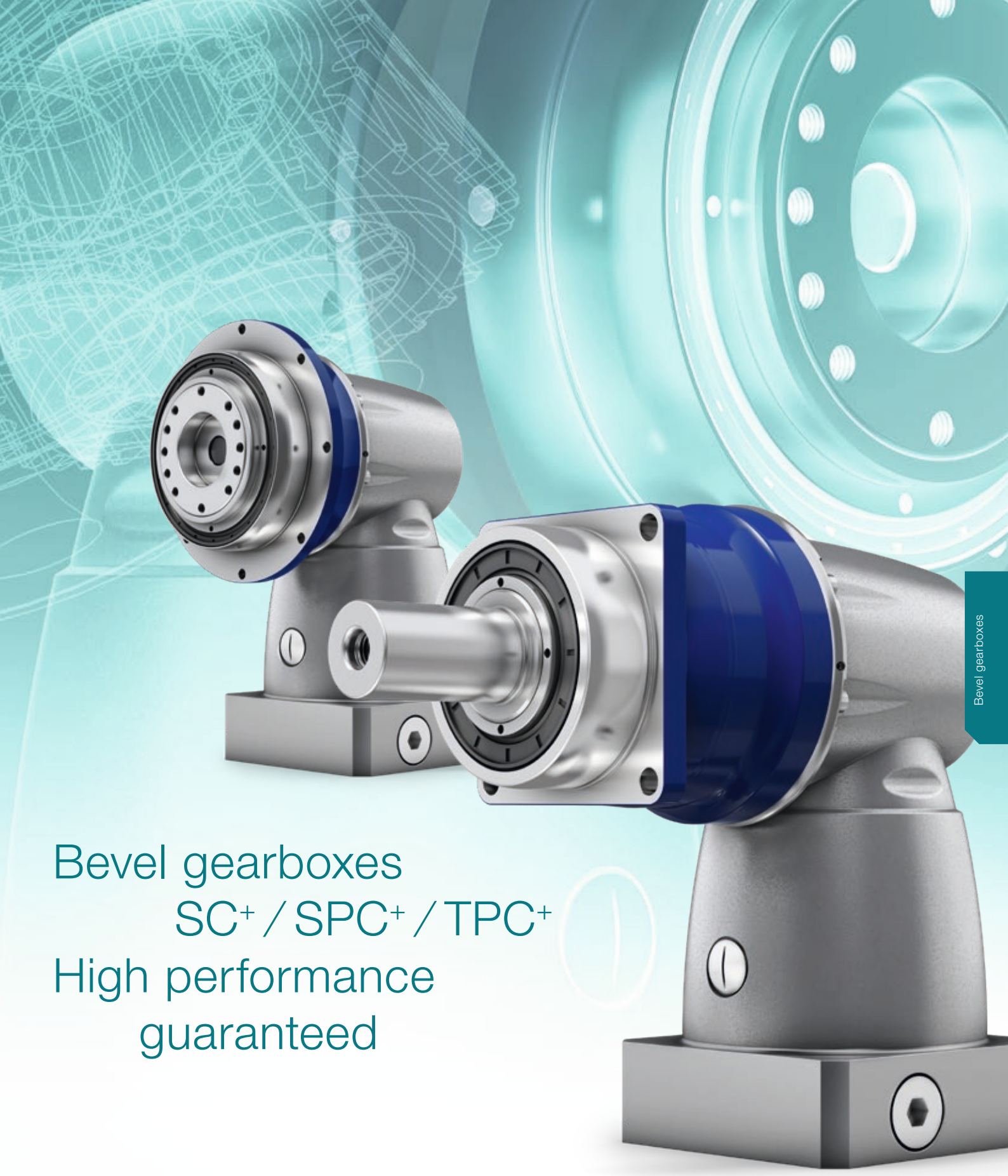

Bevel gearboxes SC+ / SPC+ / TPC+ High performance guaranteed

SC⁺ / SPC⁺ / TPC⁺ – High performance at low ratios

SPC⁺

SC⁺

If the application requires above-average performance at lower ratios: The innovative design of the alpha Advanced Line bevel gearbox SC⁺ / SPC⁺ / TPC⁺ is not only space-saving, elegant and energy-efficient, it also delivers an impressive performance and guarantees smooth operation.

Product highlights

Max. torsional backlash

SC⁺	≤ 4 arcmin (Standard)
SPC⁺ / TPC⁺	≤ 4 arcmin (Standard)
	≤ 2 arcmin (Reduced)

High power density and dynamics

High output speeds
due to gear ratios
1:1 and 2:1 (single-stage)

Efficiency of 97%

SC⁺ / SPC⁺ / TPC⁺ compared to the industry standard

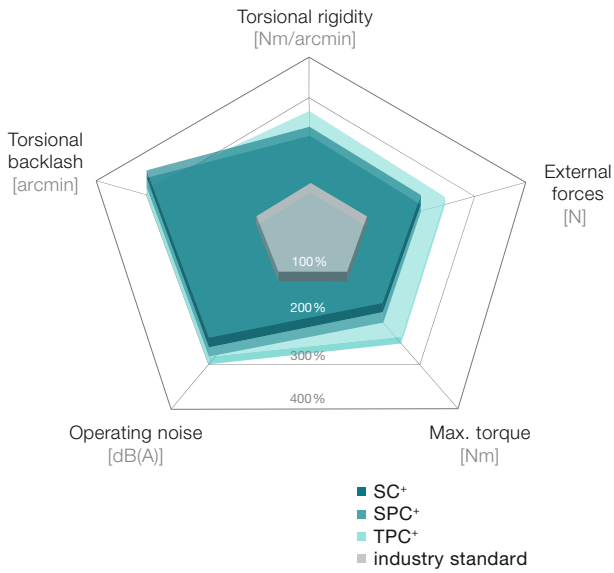

TPC⁺ with pinions

SPC⁺ with rack and pinion

TPC+

SPC+ with metal bellows coupling

				1-stage	
Ratio		i		**1**	**2**
Max. torque [a) b) e)]		T_{2a}	*Nm*	12	12
			in.lb	106	106
Max. acceleration torque [b) e)] (max. 1000 cycles per hour)		T_{2B}	*Nm*	10	10
			in.lb	89	89
Nominal torque (at n_{1N})		T_{2N}	*Nm*	7	7
			in.lb	62	62
Emergency stop torque [a) b) e)] (permitted 1000 times during the service life of the gearbox)		T_{2Not}	*Nm*	25	25
			in.lb	221	221
Permitted average input speed (at T_{2N} and 20 °C ambient temperature) [d)]		n_{1N}	n_{1T}	5000	5500
Max. input speed		n_{1Max}	*rpm*	6000	6000
Mean no load running torque [b)] (at n_1 = 3000 rpm and 20 °C gearbox temperature)		T_{012}	*Nm*	0.5	0.3
			in.lb	4	3
Max. backlash		j_t	*arcmin*	Standard ≤ 5	
Torsional rigidity [b)]		C_{t21}	*Nm/arcmin*	0.4	0.6
			in.lb/arcmin	4	5
Max. axial force [c)]		F_{2AMax}	*N*	500	
			lb_f	113	
Max. lateral force [c)]		F_{2QMax}	*N*	950	
			lb_f	214	
Max. tilting moment		M_{2KMax}	*Nm*	71	
			in.lb	628	
Efficiency at full load		η	%	97	
Service life		L_h	*h*	> 20000	
Weight (incl. standard adapter plate)		m	*kg*	1.9	
			lb_m	4	
Operating noise (at reference ratio and reference speed – ratio-specific values available in cymex®)		L_{PA}	*dB(A)*	≤ 66	
Max. permitted housing temperature			°C	+90	
			F	194	
Ambient temperature			°C	0 to +40	
			F	32 to 104	
Lubrication				Lubricated for life	
Direction of rotation				In- and output same direction	
Protection class				IP 65	
Metal bellows coupling (recommended product type – validate sizing with cymex®)				BC2 - 00015AA - 012.000 - X	
Bore diameter of coupling on the application side			*mm*	X = 008.000 - 028.000	
Mass moment of inertia (relates to the drive) Clamping hub diameter [mm]	C 14	J_1	$kgcm^2$	0.66	0.42
			10^{-3} $in.lb.s^2$	0.58	0.37
	E 19	J_1	$kgcm^2$	0.99	0.75
			10^{-3} $in.lb.s^2$	0.88	0.66

Please use our sizing software cymex® for a detailed sizing – **www.wittenstein-cymex.com**
Please contact us for optimum sizing at S1 conditions (Continuous operation).

[a)] At max. 10 % F_{2QMax}
[b)] Valid for standard clamping hub diameter
[c)] Refers to center of the output shaft or flange
[d)] Please reduce input speed at higher ambient temperatures
[e)] Smooth shaft

View A

Motor shaft diameter [mm]

1-stage

up to 14/19 [4] (C [5]/E) clamping hub diameter

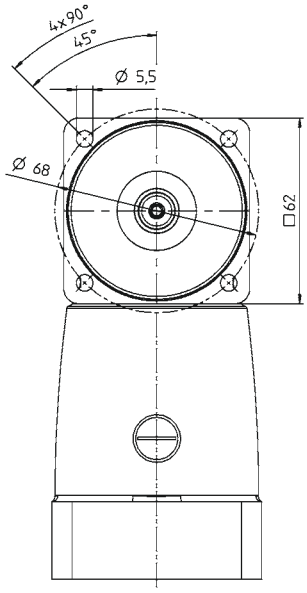

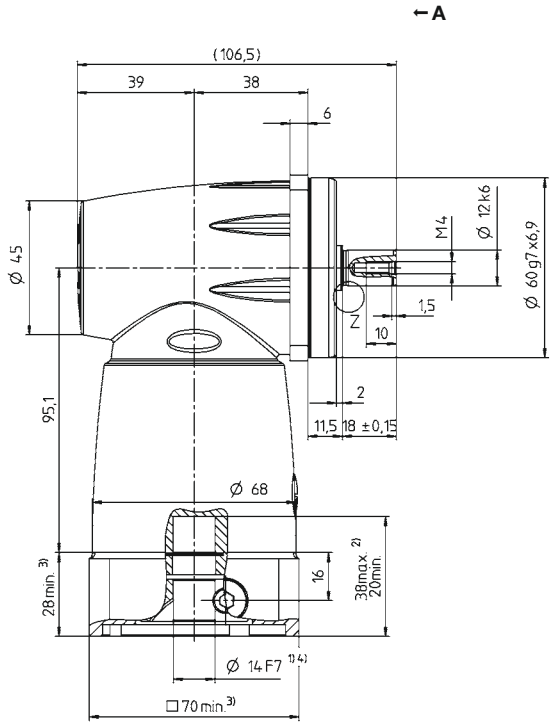

Bevel gearboxes

SC+

Other output variants

Shaft with key

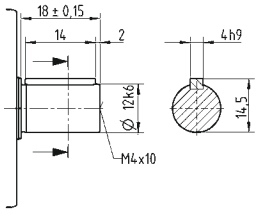

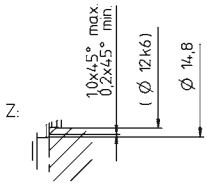

See technical data sheet for available clamping hub diameters (mass moment of inertia). Dimensions available on request.

Non-tolerated dimensions are nominal dimensions
1) Check motor shaft fit
2) Min. / Max. permissible motor shaft length. Longer motor shafts are possible, please contact alpha.
3) The dimensions depend on the motor
4) Smaller motor shaft diameter is compensated by a bushing with a minimum thickness of 1 mm
5) Standard clamping hub diameter

				1-stage	
Ratio		i		**1**	**2**
Max. torque [a) b) e)]		T_{2a}	*Nm*	36	36
			in.lb	319	319
Max. acceleration torque [b) e)] (max. 1000 cycles per hour)		T_{2B}	*Nm*	30	30
			in.lb	266	266
Nominal torque (at n_{1N})		T_{2N}	*Nm*	20	20
			in.lb	177	177
Emergency stop torque [a) b) e)] (permitted 1000 times during the service life of the gearbox)		T_{2Not}	*Nm*	48	62
			in.lb	425	549
Permitted average input speed (at T_{2N} and 20 °C ambient temperature) [d)]		n_{1N}	n_{1T}	2600	4000
Max. input speed		n_{1Max}	*rpm*	6000	6000
Mean no load running torque [b)] (at n_1 = 3000 rpm and 20 °C gearbox temperature)		T_{012}	*Nm*	0.9	0.3
			in.lb	8	3
Max. backlash		j_t	*arcmin*	Standard ≤ 4	
Torsional rigidity [b)]		C_{t21}	*Nm/arcmin*	1	1.5
			in.lb/arcmin	9	13
Max. axial force [c)]		F_{2AMax}	*N*	700	
			lb_f	158	
Max. lateral force [c)]		F_{2QMax}	*N*	1300	
			lb_f	293	
Max. tilting moment		M_{2KMax}	*Nm*	131	
			in.lb	1159	
Efficiency at full load		η	%	97	
Service life		L_h	*h*	> 20000	
Weight (incl. standard adapter plate)		m	*kg*	3.6	
			lb_m	8	
Operating noise (at reference ratio and reference speed – ratio-specific values available in cymex®)		L_{PA}	*dB(A)*	≤ 68	
Max. permitted housing temperature			°C	+90	
			F	194	
Ambient temperature			°C	0 to +40	
			F	32 to 104	
Lubrication				Lubricated for life	
Direction of rotation				In- and output same direction	
Protection class				IP 65	
Metal bellows coupling (recommended product type – validate sizing with cymex®)				BC2 - 00030AA - 016.000 - X	
Bore diameter of coupling on the application side			*mm*	X = 010.000 - 030.000	
Mass moment of inertia (relates to the drive) Clamping hub diameter [mm]	E 19	J_1	$kgcm^2$	1.99	1.19
			10^{-3} $in.lb.s^2$	1.76	1.05
	H 28	J_1	$kgcm^2$	3.43	2.63
			10^{-3} $in.lb.s^2$	3.04	2.33

Please use our sizing software cymex® for a detailed sizing – **www.wittenstein-cymex.com**
Please contact us for optimum sizing at S1 conditions (Continuous operation).

[a)] At max. 10 % F_{2QMax}
[b)] Valid for standard clamping hub diameter
[c)] Refers to center of the output shaft or flange
[d)] Please reduce input speed at higher ambient temperatures
[e)] Smooth shaft

View A

Motor shaft diameter [mm]

1-stage

up to 19/28 [4] (E[5]/H) clamping hub diameter

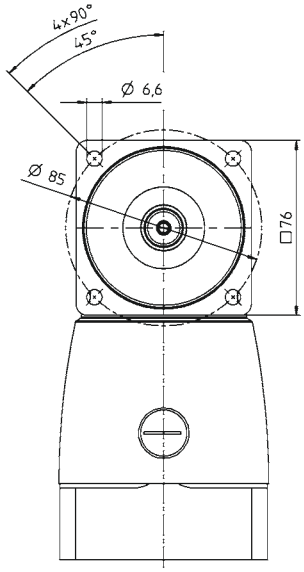

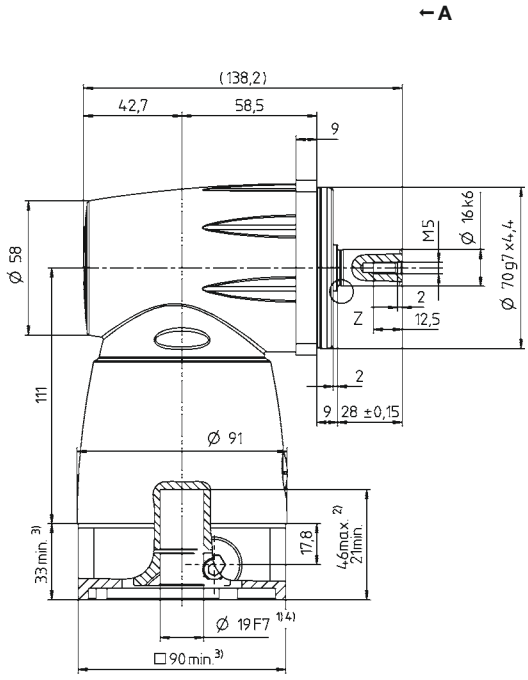

Bevel gearboxes

SC+

Other output variants

Shaft with key

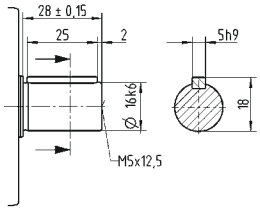

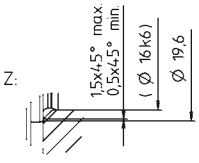

See technical data sheet for available clamping hub diameters (mass moment of inertia). Dimensions available on request.

Non-tolerated dimensions are nominal dimensions

1) Check motor shaft fit
2) Min./Max. permissible motor shaft length. Longer motor shafts are possible, please contact alpha.
3) The dimensions depend on the motor
4) Smaller motor shaft diameter is compensated by a bushing with a minimum thickness of 1 mm
5) Standard clamping hub diameter

				1-stage	
Ratio		i		**1**	**2**
Max. torque [a) b) e)]		T_{2a}	*Nm*	97	97
			in.lb	859	859
Max. acceleration torque [b) e)] (max. 1000 cycles per hour)		T_{2B}	*Nm*	81	81
			in.lb	717	717
Nominal torque (at n_{1N})		T_{2N}	*Nm*	50	50
			in.lb	443	443
Emergency stop torque [a) b) e)] (permitted 1000 times during the service life of the gearbox)		T_{2Not}	*Nm*	135	160
			in.lb	1195	1416
Permitted average input speed (at T_{2N} and 20 °C ambient temperature) [d)]		n_{1N}	n_{1T}	2500	2800
Max. input speed		n_{1Max}	*rpm*	4500	4500
Mean no load running torque [b)] (at n_1 = 3000 rpm and 20 °C gearbox temperature)		T_{012}	*Nm*	2.5	1.5
			in.lb	22	13
Max. backlash		j_t	*arcmin*	Standard ≤ 4	
Torsional rigidity [b)]		C_{t21}	*Nm/arcmin*	2.9	4.6
			in.lb/arcmin	26	41
Max. axial force [c)]		F_{2AMax}	*N*	1900	
			lb_f	428	
Max. lateral force [c)]		F_{2QMax}	*N*	3800	
			lb_f	855	
Max. tilting moment		M_{2KMax}	*Nm*	439	
			in.lb	3886	
Efficiency at full load		η	%	97	
Service life		L_h	*h*	> 20000	
Weight (incl. standard adapter plate)		m	*kg*	7	
			lb_m	15	
Operating noise (at reference ratio and reference speed – ratio-specific values available in cymex®)		L_{PA}	*dB(A)*	≤ 68	
Max. permitted housing temperature			°C	+90	
			F	194	
Ambient temperature			°C	0 to +40	
			F	32 to 104	
Lubrication				Lubricated for life	
Direction of rotation				In- and output same direction	
Protection class				IP 65	
Metal bellows coupling (recommended product type – validate sizing with cymex®)				BC2 - 00080AA - 022.000 - X	
Bore diameter of coupling on the application side			*mm*	X = 014.000 - 042.000	
Mass moment of inertia (relates to the drive) Clamping hub diameter [mm]	H 28	J_1	$kgcm^2$	7.1	4.8
			10^{-3} $in.lb.s^2$	6.28	4.25
	K 38	J_1	$kgcm^2$	14.2	11.9
			10^{-3} $in.lb.s^2$	12.57	10.53

Please use our sizing software cymex® for a detailed sizing – **www.wittenstein-cymex.com**
Please contact us for optimum sizing at S1 conditions (Continuous operation).

[a)] At max. 10 % F_{2QMax}
[b)] Valid for standard clamping hub diameter
[c)] Refers to center of the output shaft or flange
[d)] Please reduce input speed at higher ambient temperatures
[e)] Smooth shaft

View A

Motor shaft diameter [mm]

1-stage

up to 28/38 [4] (H[5]/K) clamping hub diameter

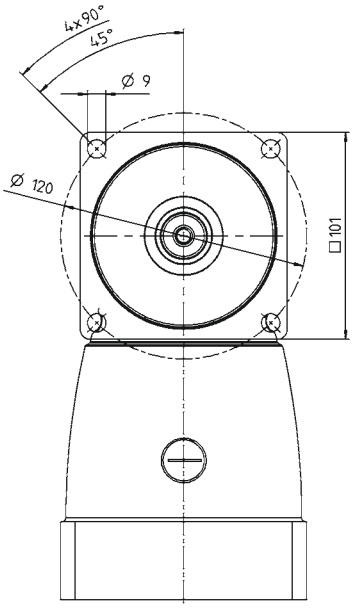

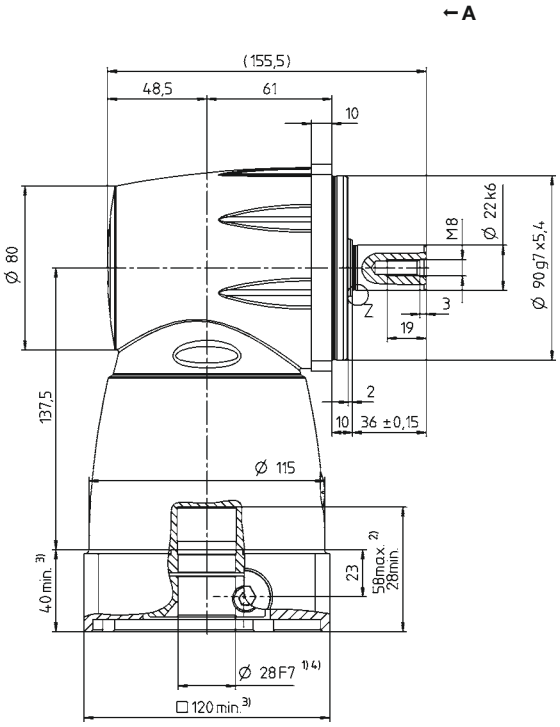

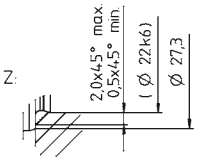

Other output variants

Shaft with key

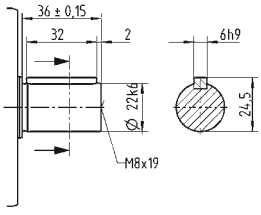

See technical data sheet for available clamping hub diameters (mass moment of inertia). Dimensions available on request.

Non-tolerated dimensions are nominal dimensions

1) Check motor shaft fit
2) Min./Max. permissible motor shaft length. Longer motor shafts are possible, please contact alpha.
3) The dimensions depend on the motor
4) Smaller motor shaft diameter is compensated by a bushing with a minimum thickness of 1 mm
5) Standard clamping hub diameter

				1-stage	
Ratio			i	**1**	**2**
Max. torque [a) b) e)]			T_{2a}	*Nm*	210	210
				in.lb	1859	1859
Max. acceleration torque [b) e)] (max. 1000 cycles per hour)			T_{2B}	*Nm*	175	175
				in.lb	1549	1549
Nominal torque (at n_{1N})			T_{2N}	*Nm*	110	110
				in.lb	974	974
Emergency stop torque [a) b) e)] (permitted 1000 times during the service life of the gearbox)			T_{2Not}	*Nm*	240	310
				in.lb	2124	2744
Permitted average input speed (at T_{2N} and 20 °C ambient temperature) [d)]			n_{1N}	n_{1T}	1600	2100
Max. input speed			n_{1Max}	*rpm*	4500	4500
Mean no load running torque [b)] (at n_1 = 3000 rpm and 20 °C gearbox temperature)			T_{012}	*Nm*	4	1.7
				in.lb	35	15
Max. backlash			j_t	*arcmin*	Standard ≤ 4	
Torsional rigidity [b)]			C_{t21}	*Nm/arcmin*	6.4	9.1
				in.lb/arcmin	57	81
Max. axial force [c)]			F_{2AMax}	*N*	3000	
				lb_f	675	
Max. lateral force [c)]			F_{2QMax}	*N*	6000	
				lb_f	1350	
Max. tilting moment			M_{2KMax}	*Nm*	957	
				in.lb	8470	
Efficiency at full load			η	%	97	
Service life			L_h	*h*	> 20000	
Weight (incl. standard adapter plate)			m	*kg*	14.7	
				lb_m	32	
Operating noise (at reference ratio and reference speed – ratio-specific values available in cymex®)			L_{PA}	*dB(A)*	≤ 70	
Max. permitted housing temperature				°C	+90	
				F	194	
Ambient temperature				°C	0 to +40	
				F	32 to 104	
Lubrication					Lubricated for life	
Direction of rotation					In- and output same direction	
Protection class					IP 65	
Metal bellows coupling (recommended product type – validate sizing with cymex®)					BC2 - 00200AA - 032.000 - X	
Bore diameter of coupling on the application side				*mm*	X = 022.000 - 045.000	
Mass moment of inertia (relates to the drive) Clamping hub diameter [mm]	K	38	J_1	*kgcm²*	41.3	21.3
				10^{-3} *in.lb.s²*	36.55	18.85

Please use our sizing software cymex® for a detailed sizing – **www.wittenstein-cymex.com**
Please contact us for optimum sizing at S1 conditions (Continuous operation).

[a)] At max. 10 % F_{2QMax}
[b)] Valid for standard clamping hub diameter
[c)] Refers to center of the output shaft or flange
[d)] Please reduce input speed at higher ambient temperatures
[e)] Smooth shaft

View A

Motor shaft diameter [mm]

1-stage

up to 38 [4] (K) [5]
clamping hub
diameter

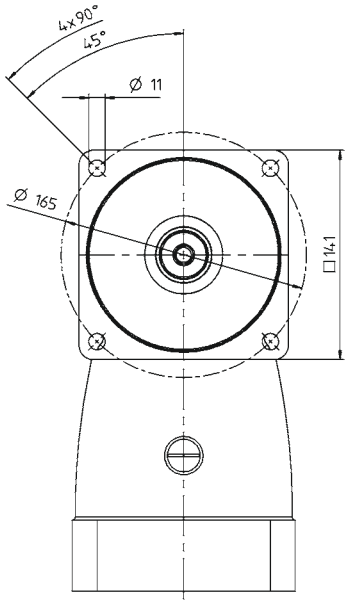

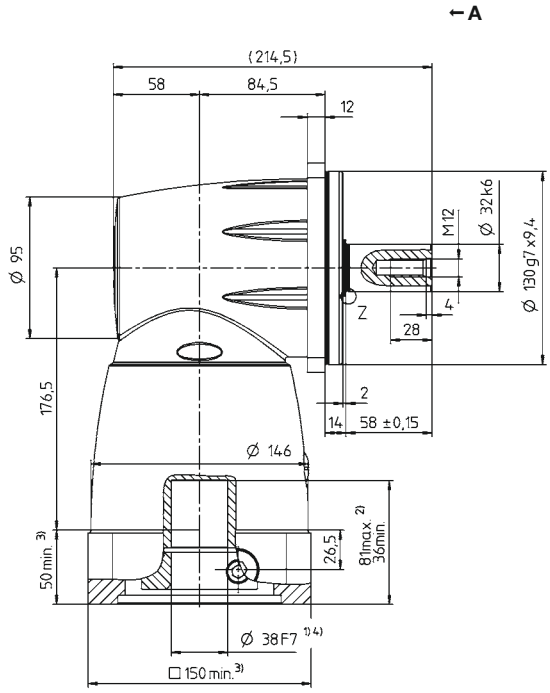

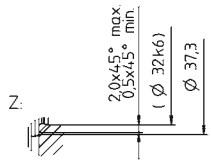

Other output variants

Shaft with key

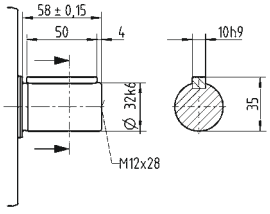

See technical data sheet for available clamping hub diameters (mass moment of inertia). Dimensions available on request.

Non-tolerated dimensions are nominal dimensions

1) Check motor shaft fit
2) Min. / Max. permissible motor shaft length. Longer motor shafts are possible, please contact alpha.
3) The dimensions depend on the motor
4) Smaller motor shaft diameter is compensated by a bushing with a minimum thickness of 1 mm
5) Standard clamping hub diameter

				1-stage	
Ratio			i	**1**	**2**
Max. torque [a) b) e)]			T_{2a}	*Nm*	378	378
				in.lb	3346	3346
Max. acceleration torque [b) e)] (max. 1000 cycles per hour)			T_{2B}	*Nm*	315	315
				in.lb	2788	2788
Nominal torque (at n_{1N})			T_{2N}	*Nm*	200	200
				in.lb	1770	1770
Emergency stop torque [a) b) e)] (permitted 1000 times during the service life of the gearbox)			T_{2Not}	*Nm*	390	685
				in.lb	3452	6063
Permitted average input speed (at T_{2N} and 20 °C ambient temperature) [d)]			n_{1N}	n_{1T}	1200	1500
Max. input speed			n_{1Max}	*rpm*	4000	4000
Mean no load running torque [b)] (at n_1 = 3000 rpm and 20 °C gearbox temperature)			T_{012}	*Nm*	9.5	5.5
				in.lb	84	49
Max. backlash			j_t	*arcmin*	Standard ≤ 3	
Torsional rigidity [b)]			C_{t21}	*Nm/arcmin*	13	22
				in.lb/arcmin	115	195
Max. axial force [c)]			F_{2AMax}	*N*	4500	
				lb_f	1013	
Max. lateral force [c)]			F_{2QMax}	*N*	9000	
				lb_f	2025	
Max. tilting moment			M_{2KMax}	*Nm*	1910	
				in.lb	16905	
Efficiency at full load			η	%	97	
Service life			L_h	*h*	> 20000	
Weight (incl. standard adapter plate)			m	*kg*	31.4	
				lb_m	69	
Operating noise (at reference ratio and reference speed – ratio-specific values available in cymex®)			L_{PA}	*dB(A)*	≤ 70	
Max. permitted housing temperature				*°C*	+90	
				F	194	
Ambient temperature				*°C*	0 to +40	
				F	32 to 104	
Lubrication					Lubricated for life	
Direction of rotation					In- and output same direction	
Protection class					IP 65	
Metal bellows coupling (recommended product type – validate sizing with cymex®)					BC2 - 00300AA - 040.000 - X	
Bore diameter of coupling on the application side				*mm*	X = 024.000 - 060.000	
Mass moment of inertia (relates to the drive) Clamping hub diameter [mm]	M	48	J_1	*kgcm²*	99.5	46.7
				10⁻³ in.lb.s²	88.06	41.33

Please use our sizing software cymex® for a detailed sizing – **www.wittenstein-cymex.com**
Please contact us for optimum sizing at S1 conditions (Continuous operation).

[a)] At max. 10 % F_{2QMax}
[b)] Valid for standard clamping hub diameter
[c)] Refers to center of the output shaft or flange
[d)] Please reduce input speed at higher ambient temperatures
[e)] Smooth shaft

View A

Motor shaft diameter [mm]

1-stage

up to 48 [4] (M)[5] clamping hub diameter

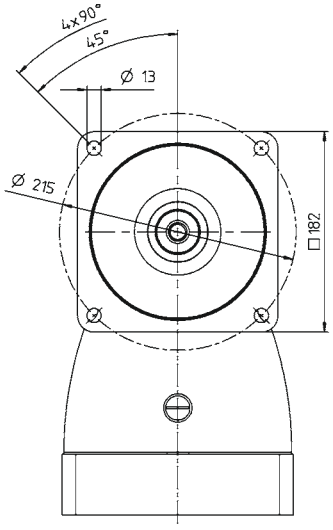

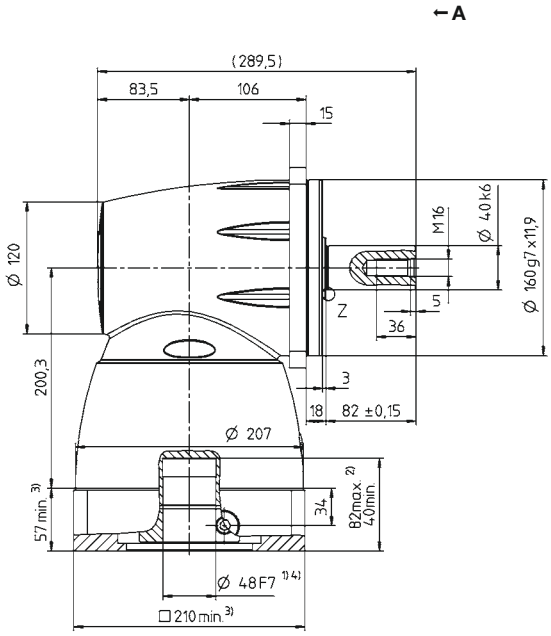

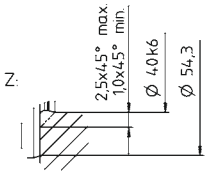

Other output variants

Shaft with key

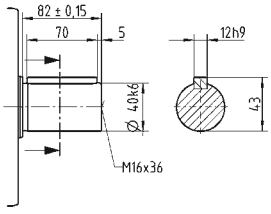

See technical data sheet for available clamping hub diameters (mass moment of inertia). Dimensions available on request.

Non-tolerated dimensions are nominal dimensions
1) Check motor shaft fit
2) Min. / Max. permissible motor shaft length. Longer motor shafts are possible, please contact alpha.
3) The dimensions depend on the motor
4) Smaller motor shaft diameter is compensated by a bushing with a minimum thickness of 1 mm
5) Standard clamping hub diameter

SPC+ 060 MF 2-stage

				2-stage						
Ratio		i		**4**	**5**	**7**	**8**	**10**	**14**	**20**
Max. torque [a) b) e)]		T_{2a}	*Nm*	48	60	67	48	60	67	51
			in.lb	425	531	593	425	531	593	451
Max. acceleration torque [b) e)] (max. 1000 cycles per hour)		T_{2B}	*Nm*	40	50	50	40	50	50	38
			in.lb	354	443	443	354	443	443	336
Nominal torque (at n_{1N})		T_{2N}	*Nm*	26	26	26	26	26	26	17
			in.lb	230	230	230	230	230	230	150
Emergency stop torque [a) b) e)] (permitted 1000 times during the service life of the gearbox)		T_{2Not}	*Nm*	100	109	109	100	109	109	100
			in.lb	885	965	965	885	965	965	885
Permitted average input speed (at T_{2N} and 20 °C ambient temperature) [d)]		n_{1N}	n_{1T}	3000	3000	3200	3400	3400	3600	3600
Max. input speed		n_{1Max}	*rpm*	6000	6000	6000	6000	6000	6000	6000
Mean no load running torque [b)] (at n_1 = 3000 rpm and 20 °C gearbox temperature)		T_{012}	*Nm*	1.2	1	1	0.6	0.6	0.5	0.4
			in.lb	11	9	9	5	5	4	4
Max. backlash		j_t	*arcmin*	Standard ≤ 5 / Reduced ≤ 3						
Torsional rigidity [b)]		C_{t21}	*Nm/arcmin*	2.4	2.7	3.1	2.7	3	3.2	3.3
			in.lb/arcmin	21	24	27	24	27	28	29
Max. axial force [c)]		F_{2AMax}	*N*	2400						
			lb_f	540						
Max. lateral force [c)]		F_{2QMax}	*N*	2800						
			lb_f	630						
Max. tilting moment		M_{2KMax}	*Nm*	152						
			in.lb	1345						
Efficiency at full load		η	%	95						
Service life		L_h	*h*	> 20000						
Weight (incl. standard adapter plate)		m	*kg*	3.1						
			lb_m	7						
Operating noise (at reference ratio and reference speed – ratio-specific values available in cymex®)		L_{PA}	*dB(A)*	≤ 68						
Max. permitted housing temperature			°C	+90						
			F	194						
Ambient temperature			°C	0 to +40						
			F	32 to 104						
Lubrication				Lubricated for life						
Direction of rotation				In- and output same direction						
Protection class				IP 65						
Metal bellows coupling (recommended product type – validate sizing with cymex®)				BC2 - 00060AA - 016.000 - X						
Bore diameter of coupling on the application side			*mm*	X = 012.000 - 035.000						
Mass moment of inertia (relates to the drive) Clamping hub diameter [mm]	C 14	J_1	$kgcm^2$	0.72	0.7	0.66	0.44	0.43	0.43	0.43
			10^{-3} $in.lb.s^2$	0.64	0.62	0.58	0.39	0.38	0.38	0.38
	E 19	J_1	$kgcm^2$	1.05	1.03	0.99	0.77	0.76	0.76	0.75
			10^{-3} $in.lb.s^2$	1	1	1	1	1	1	1

Please use our sizing software cymex® for a detailed sizing – **www.wittenstein-cymex.com**
Please contact us for optimum sizing at S1 conditions (Continuous operation).

a) At max. 10 % F_{2QMax}
b) Valid for standard clamping hub diameter
c) Refers to center of the output shaft or flange
d) Please reduce input speed at higher ambient temperatures
e) Smooth shaft

View A

Motor shaft diameter [mm]

2-stage

up to 14/19 [4]
(C [5]/E) clamping
hub diameter

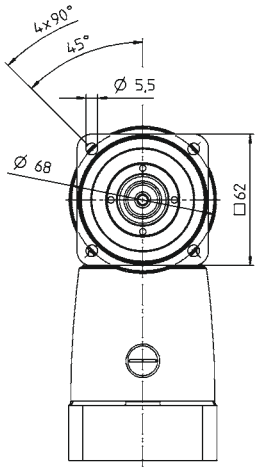

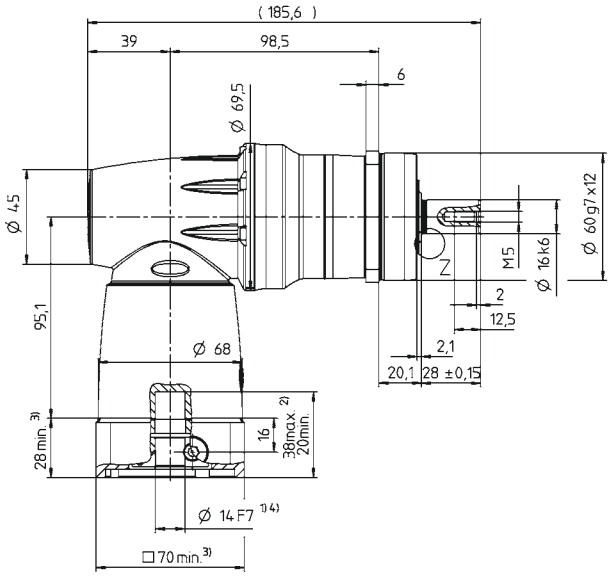

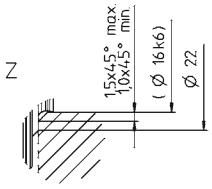

Other output variants

Shaft with key

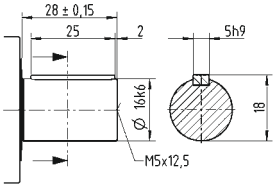

Splined shaft (DIN 5480)

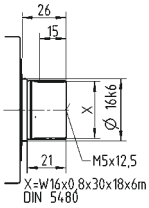

Shaft mounted

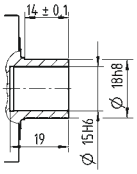

See technical data sheet for available clamping hub diameters (mass moment of inertia). Dimensions available on request.

Non-tolerated dimensions are nominal dimensions
1) Check motor shaft fit
2) Min./Max. permissible motor shaft length. Longer motor shafts are possible, please contact alpha.
3) The dimensions depend on the motor
4) Smaller motor shaft diameter is compensated by a bushing with a minimum thickness of 1 mm
5) Standard clamping hub diameter

SPC+ 075 MF 2-stage

				2-stage						
Ratio		i		**4**	**5**	**7**	**8**	**10**	**14**	**20**
Max. torque [a) b) e)]		T_{2a}	*Nm*	144	176	176	144	176	176	152
			in.lb	1275	1558	1558	1275	1558	1558	1345
Max. acceleration torque [b) e)] (max. 1000 cycles per hour)		T_{2B}	*Nm*	120	132	132	120	132	132	114
			in.lb	1062	1168	1168	1062	1168	1168	1009
Nominal torque (at n_{1N})		T_{2N}	*Nm*	75	75	75	75	75	75	52
			in.lb	664	664	664	664	664	664	460
Emergency stop torque [a) b) e)] (permitted 1000 times during the service life of the gearbox)		T_{2Not}	*Nm*	192	240	250	248	250	250	250
			in.lb	1699	2124	2213	2195	2213	2213	2213
Permitted average input speed (at T_{2N} and 20 °C ambient temperature) [d)]		n_{1N}	n_{1T}	2200	2200	2400	2650	2650	2800	2800
Max. input speed		n_{1Max}	*rpm*	6000	6000	6000	6000	6000	6000	6000
Mean no load running torque [b)] (at n_1 = 3000 rpm and 20 °C gearbox temperature)		T_{012}	*Nm*	2.3	2	1.7	1	0.9	0.7	0.6
			in.lb	20	18	15	9	8	6	5
Max. backlash		j_t	*arcmin*	Standard ≤ 4 / Reduced ≤ 2						
Torsional rigidity [b)]		C_{t21}	*Nm/arcmin*	6.6	7.5	8.6	7.6	8.3	9.1	9.5
			in.lb/arcmin	58	66	76	67	73	81	84
Max. axial force [c)]		F_{2AMax}	*N*	3350						
			lb_f	754						
Max. lateral force [c)]		F_{2QMax}	*N*	4200						
			lb_f	945						
Max. tilting moment		M_{2KMax}	*Nm*	236						
			in.lb	2089						
Efficiency at full load		η	%	95						
Service life		L_h	*h*	> 20000						
Weight (incl. standard adapter plate)		m	*kg*	5.9						
			lb_m	13						
Operating noise (at reference ratio and reference speed – ratio-specific values available in cymex®)		L_{PA}	*dB(A)*	≤ 68						
Max. permitted housing temperature			°C	+90						
			F	194						
Ambient temperature			°C	0 to +40						
			F	32 to 104						
Lubrication				Lubricated for life						
Direction of rotation				In- and output same direction						
Protection class				IP 65						
Metal bellows coupling (recommended product type – validate sizing with cymex®)				BC2 - 00150AA - 022.000 - X						
Bore diameter of coupling on the application side			*mm*	X = 019.000 - 042.000						
Mass moment of inertia (relates to the drive) Clamping hub diameter [mm]	E 19	J_1	$kgcm^2$	2.33	2.15	1.99	1.25	1.23	1.21	1.2
			10^{-3} $in.lb.s^2$	2.06	1.9	1.76	1.11	1.09	1.07	1.06
	H 28	J_1	$kgcm^2$	3.66	3.59	3.43	2.68	2.67	2.65	2.64
			10^{-3} $in.lb.s^2$	3.24	3.18	3.04	2.37	2.36	2.35	2.34

Please use our sizing software cymex® for a detailed sizing – **www.wittenstein-cymex.com**
Please contact us for optimum sizing at S1 conditions (Continuous operation).

a) At max. 10 % F_{2QMax}
b) Valid for standard clamping hub diameter
c) Refers to center of the output shaft or flange
d) Please reduce input speed at higher ambient temperatures
e) Smooth shaft

View A

Motor shaft diameter [mm]

2-stage

up to 19/28 [4] (E[5]/H) clamping hub diameter

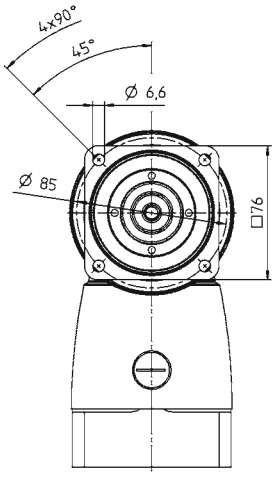

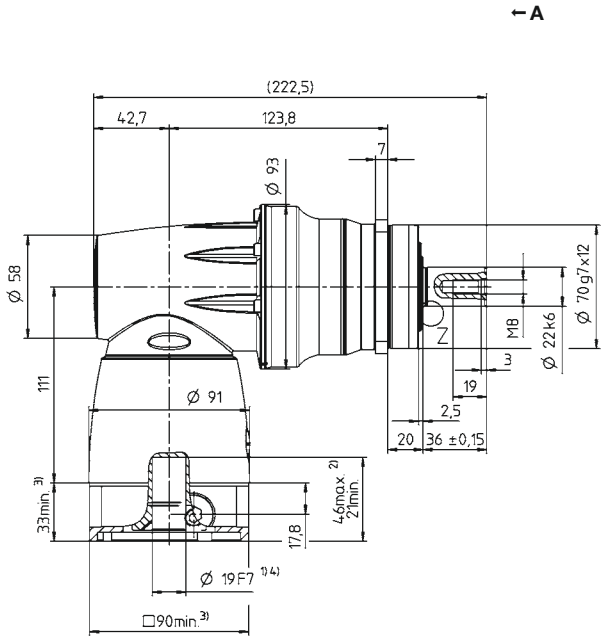

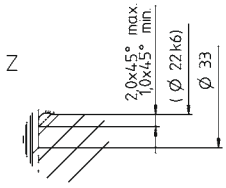

Other output variants

Shaft with key

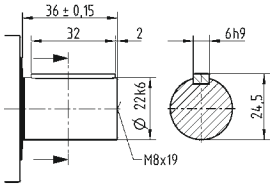

Splined shaft (DIN 5480)

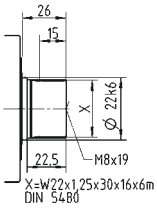

Shaft mounted

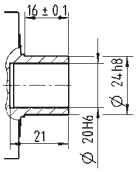

See technical data sheet for available clamping hub diameters (mass moment of inertia). Dimensions available on request.

Non-tolerated dimensions are nominal dimensions

1) Check motor shaft fit
2) Min./Max. permissible motor shaft length. Longer motor shafts are possible, please contact alpha.
3) The dimensions depend on the motor
4) Smaller motor shaft diameter is compensated by a bushing with a minimum thickness of 1 mm
5) Standard clamping hub diameter

				2-stage						
Ratio			*i*	**4**	**5**	**7**	**8**	**10**	**14**	**20**
Max. torque [a) b) e)]			T_{2a}	*Nm*	389	486	428	389	486	428	376
				in.lb	3443	4301	3788	3443	4301	3788	3328
Max. acceleration torque [b) e)] (max. 1000 cycles per hour)			T_{2B}	*Nm*	324	378	378	324	378	378	282
				in.lb	2868	3346	3346	2868	3346	3346	2496
Nominal torque (at n_{1N})			T_{2N}	*Nm*	180	175	170	180	175	170	120
				in.lb	1593	1549	1505	1593	1549	1505	1062
Emergency stop torque [a) b) e)] (permitted 1000 times during the service life of the gearbox)			T_{2Not}	*Nm*	540	625	625	625	625	625	625
				in.lb	4779	5532	5532	5532	5532	5532	5532
Permitted average input speed (at T_{2N} and 20 °C ambient temperature) [d)]			n_{1N}	n_{1T}	2000	2000	2200	2300	2300	2400	2400
Max. input speed			n_{1Max}	*rpm*	4500	4500	4500	4500	4500	4500	4500
Mean no load running torque [b)] (at n_1 = 3000 rpm and 20 °C gearbox temperature)			T_{012}	*Nm*	5.2	4.9	4.1	2.9	2.7	2.3	2.2
				in.lb	46	43	36	26	24	20	19
Max. backlash			j_t	*arcmin*	Standard ≤ 4 / Reduced ≤ 2						
Torsional rigidity [b)]			C_{t21}	*Nm/arcmin*	20	23	26	24	26	28	30
				in.lb/arcmin	177	204	230	212	230	248	266
Max. axial force [c)]			F_{2AMax}	*N*	5650						
				lb_f	1271						
Max. lateral force [c)]			F_{2QMax}	*N*	6600						
				lb_f	1485						
Max. tilting moment			M_{2KMax}	*Nm*	487						
				in.lb	4310						
Efficiency at full load			η	%	95						
Service life			L_h	*h*	> 20000						
Weight (incl. standard adapter plate)			*m*	*kg*	11.7						
				lb_m	26						
Operating noise (at reference ratio and reference speed – ratio-specific values available in cymex®)			L_{PA}	*dB(A)*	≤ 68						
Max. permitted housing temperature				°C	+90						
				F	194						
Ambient temperature				°C	0 to +40						
				F	32 to 104						
Lubrication					Lubricated for life						
Direction of rotation					In- and output same direction						
Protection class					IP 65						
Metal bellows coupling (recommended product type – validate sizing with cymex®)					BC2 - 00300AA - 032.000 - X						
Bore diameter of coupling on the application side				*mm*	X = 024.000 - 060.000						
Mass moment of inertia (relates to the drive) Clamping hub diameter [mm]	H	28	J_1	$kgcm^2$	8	7.6	7	5	4.9	4.9	4.8
				10^{-3} $in.lb.s^2$	7	7	6	4	4	4	4
	K	38	J_1	$kgcm^2$	15	14.7	14.1	12.1	12	11.9	11.9
				10^{-3} $in.lb.s^2$	13	13	12	11	11	11	11

Please use our sizing software cymex® for a detailed sizing – **www.wittenstein-cymex.com**
Please contact us for optimum sizing at S1 conditions (Continuous operation).

[a)] At max. 10 % F_{2QMax}
[b)] Valid for standard clamping hub diameter
[c)] Refers to center of the output shaft or flange
[d)] Please reduce input speed at higher ambient temperatures
[e)] Smooth shaft

View A

Motor shaft diameter [mm]

2-stage

up to 28/38 [4] (H[5]/K) clamping hub diameter

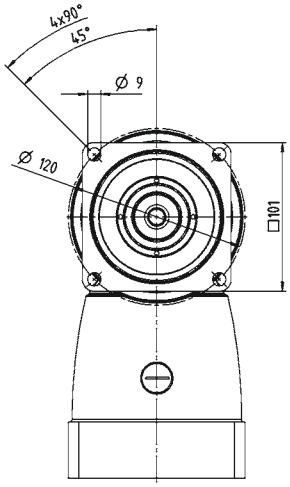

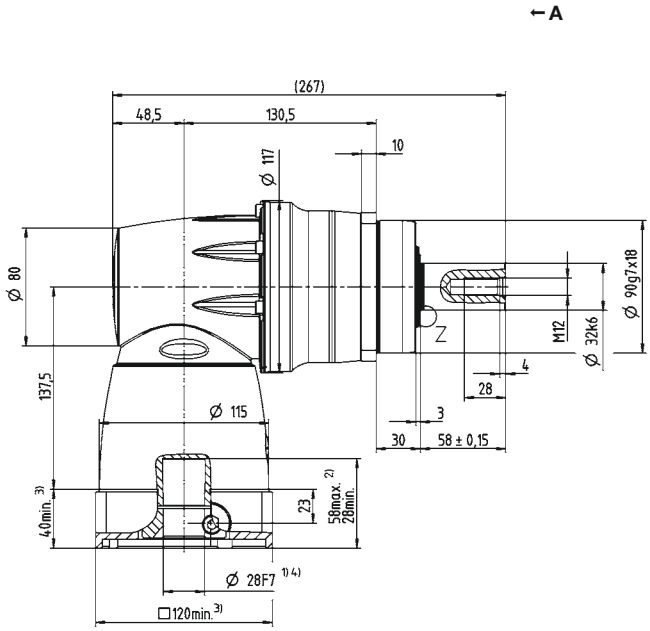

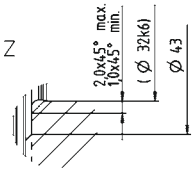

Other output variants

Shaft with key

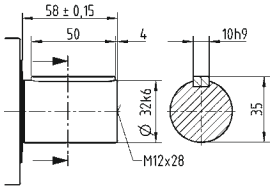

Splined shaft (DIN 5480)

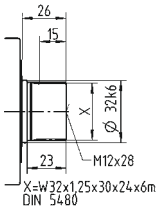

Shaft mounted

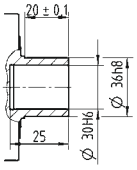

See technical data sheet for available clamping hub diameters (mass moment of inertia). Dimensions available on request.

Non-tolerated dimensions are nominal dimensions

1) Check motor shaft fit
2) Min./Max. permissible motor shaft length. Longer motor shafts are possible, please contact alpha.
3) The dimensions depend on the motor
4) Smaller motor shaft diameter is compensated by a bushing with a minimum thickness of 1 mm
5) Standard clamping hub diameter

				2-stage						
Ratio			*i*	**4**	**5**	**7**	**8**	**10**	**14**	**20**
Max. torque [a) b) e)]			T_{2a}	*Nm*	840	1050	825	840	1050	825	720
				in.lb	7435	9293	7302	7435	9293	7302	6373
Max. acceleration torque [b) e)] (max. 1000 cycles per hour)			T_{2B}	*Nm*	700	792	792	700	792	792	636
				in.lb	6196	7010	7010	6196	7010	7010	5629
Nominal torque (at n_{1N})			T_{2N}	*Nm*	360	360	360	360	360	360	220
				in.lb	3186	3186	3186	3186	3186	3186	1947
Emergency stop torque [a) b) e)] (permitted 1000 times during the service life of the gearbox)			T_{2Not}	*Nm*	960	1200	1350	1240	1350	1350	1250
				in.lb	8497	10621	11949	10975	11949	11949	11064
Permitted average input speed (at T_{2N} and 20 °C ambient temperature) [d)]			n_{1N}	n_{1T}	1300	1300	1400	1500	1500	1600	1600
Max. input speed			n_{1Max}	*rpm*	4500	4500	4500	4500	4500	4500	4500
Mean no load running torque [b)] (at n_1 = 3000 rpm and 20 °C gearbox temperature)			T_{012}	*Nm*	9.8	8.7	7.4	4.6	4	3.4	2.9
				in.lb	87	77	65	41	35	30	26
Max. backlash			j_t	*arcmin*	Standard ≤ 4 / Reduced ≤ 2						
Torsional rigidity [b)]			C_{t21}	*Nm/arcmin*	37	41	46	41	45	48	51
				in.lb/arcmin	327	363	407	363	398	425	451
Max. axial force [c)]			F_{2AMax}	*N*	9870						
				lb_f	2221						
Max. lateral force [c)]			F_{2QMax}	*N*	9900						
				lb_f	2228						
Max. tilting moment			M_{2KMax}	*Nm*	952						
				in.lb	8426						
Efficiency at full load			η	%	95						
Service life			L_h	*h*	> 20000						
Weight (incl. standard adapter plate)			*m*	*kg*	24.7						
				lb_m	55						
Operating noise (at reference ratio and reference speed – ratio-specific values available in cymex®)			L_{PA}	*dB(A)*	≤ 70						
Max. permitted housing temperature				°C	+90						
				F	194						
Ambient temperature				°C	0 to +40						
				F	32 to 104						
Lubrication					Lubricated for life						
Direction of rotation					In- and output same direction						
Protection class					IP 65						
Metal bellows coupling (recommended product type – validate sizing with cymex®)					BC2 - 00800AA - 040.000 - X						
Bore diameter of coupling on the application side				*mm*	X = 040.000 - 075.000						
Mass moment of inertia (relates to the drive) Clamping hub diameter [mm]	K	38	J_1	$kgcm^2$	30.6	29.7	27.9	18.9	18.7	18.5	18.4
				10^{-3} $in.lb.s^2$	27	26	25	17	17	16	16

Please use our sizing software cymex® for a detailed sizing – **www.wittenstein-cymex.com**
Please contact us for optimum sizing at S1 conditions (Continuous operation).

[a)] At max. 10 % F_{2QMax}
[b)] Valid for standard clamping hub diameter
[c)] Refers to center of the output shaft or flange
[d)] Please reduce input speed at higher ambient temperatures
[e)] Smooth shaft

View A

Motor shaft diameter [mm]

2-stage

up to 38 [4] (K)[5] clamping hub diameter

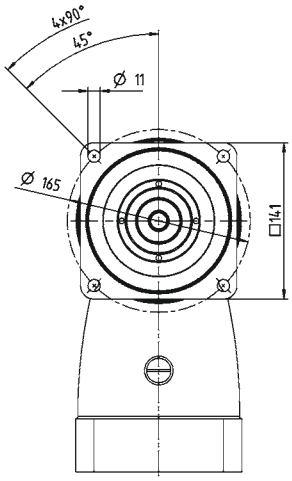

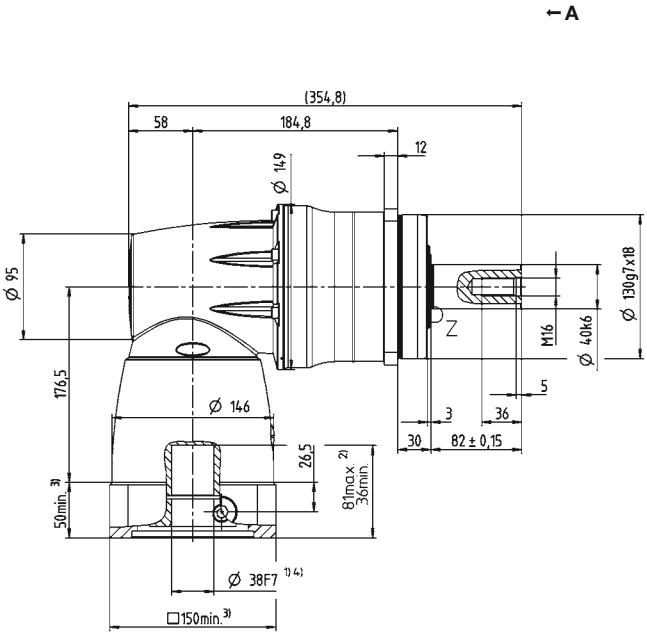

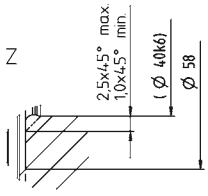

Other output variants

Shaft with key

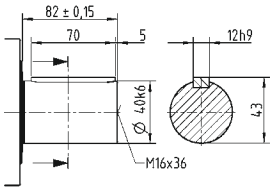

Splined shaft (DIN 5480)

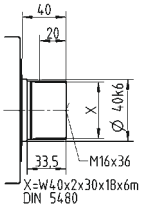

Shaft mounted

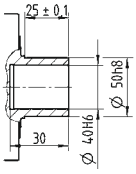

See technical data sheet for available clamping hub diameters (mass moment of inertia). Dimensions available on request.

Non-tolerated dimensions are nominal dimensions

1) Check motor shaft fit
2) Min. / Max. permissible motor shaft length. Longer motor shafts are possible, please contact alpha.
3) The dimensions depend on the motor
4) Smaller motor shaft diameter is compensated by a bushing with a minimum thickness of 1 mm
5) Standard clamping hub diameter

				2-stage						
Ratio			i	**4**	**5**	**7**	**8**	**10**	**14**	**20**
Max. torque [a) b) e)]			T_{2a}	*Nm*	1512	1890	1936	1512	1890	1936	1552
				in.lb	13382	16728	17135	13382	16728	17135	13736
Max. acceleration torque [b) e)] (max. 1000 cycles per hour)			T_{2B}	*Nm*	1260	1452	1452	1260	1452	1452	1164
				in.lb	11152	12851	12851	11152	12851	12851	10302
Nominal torque (at n_{1N})			T_{2N}	*Nm*	750	750	750	750	750	750	750
				in.lb	6638	6638	6638	6638	6638	6638	6638
Emergency stop torque [a) b) e)] (permitted 1000 times during the service life of the gearbox)			T_{2Not}	*Nm*	1560	1950	2730	2740	2750	2750	2750
				in.lb	13807	17259	24163	24251	24340	24340	24340
Permitted average input speed (at T_{2N} and 20 °C ambient temperature) [d)]			n_{1N}	n_{1T}	1000	1000	1100	1200	1200	1300	1300
Max. input speed			n_{1Max}	*rpm*	4000	4000	4000	4000	4000	4000	4000
Mean no load running torque [b)] (at n_1 = 3000 rpm and 20 °C gearbox temperature)			T_{012}	*Nm*	20.5	18.5	16.5	11	10	9	8
				in.lb	181	164	146	97	89	80	71
Max. backlash			j_t	*arcmin*	Standard ≤ 4 / Reduced ≤ 2						
Torsional rigidity [b)]			C_{t21}	*Nm/arcmin*	104	122	143	130	144	157	166
				in.lb/arcmin	920	1080	1266	1151	1275	1390	1469
Max. axial force [c)]			F_{2AMax}	*N*	15570						
				lb_f	3503						
Max. lateral force [c)]			F_{2QMax}	*N*	15400						
				lb_f	3465						
Max. tilting moment			M_{2KMax}	*Nm*	1600						
				in.lb	14161						
Efficiency at full load			η	%	95						
Service life			L_h	*h*	> 20000						
Weight (incl. standard adapter plate)			m	*kg*	54.7						
				lb_m	121						
Operating noise (at reference ratio and reference speed – ratio-specific values available in cymex®)			L_{PA}	*dB(A)*	≤ 70						
Max. permitted housing temperature				°C	+90						
				F	194						
Ambient temperature				°C	0 to +40						
				F	32 to 104						
Lubrication					Lubricated for life						
Direction of rotation					In- and output same direction						
Protection class					IP 65						
Metal bellows coupling (recommended product type – validate sizing with cymex®)					BC2 - 01500AA - 055.000 - X						
Bore diameter of coupling on the application side				*mm*	X = 050.000 - 080.000						
Mass moment of inertia (relates to the drive) Clamping hub diameter [mm]	M	48	J_1	$kgcm^2$	109.5	105	94.7	49.2	48.1	46.9	46.2
				10^{-3} $in.lb.s^2$	97	93	84	44	43	42	41

Please use our sizing software cymex® for a detailed sizing – **www.wittenstein-cymex.com**
Please contact us for optimum sizing at S1 conditions (Continuous operation).

[a)] At max. 10 % F_{2QMax}
[b)] Valid for standard clamping hub diameter
[c)] Refers to center of the output shaft or flange
[d)] Please reduce input speed at higher ambient temperatures
[e)] Smooth shaft

View A

Motor shaft diameter [mm]

2-stage

up to 48 [4] (M)[5] clamping hub diameter

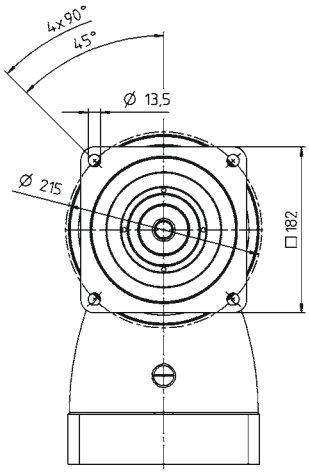

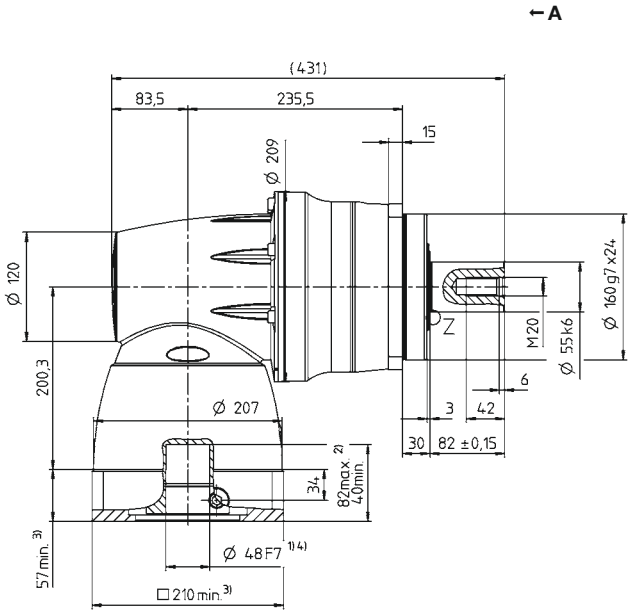

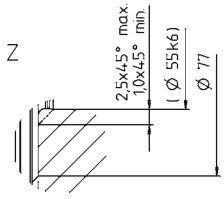

Other output variants

Shaft with key

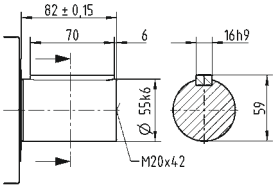

Splined shaft (DIN 5480)

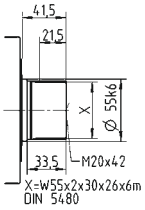

Shaft mounted

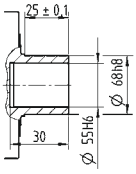

See technical data sheet for available clamping hub diameters (mass moment of inertia). Dimensions available on request.

Non-tolerated dimensions are nominal dimensions

1) Check motor shaft fit
2) Min. / Max. permissible motor shaft length. Longer motor shafts are possible, please contact alpha.
3) The dimensions depend on the motor
4) Smaller motor shaft diameter is compensated by a bushing with a minimum thickness of 1 mm
5) Standard clamping hub diameter

				2-stage						
Ratio			i	**4**	**5**	**7**	**8**	**10**	**14**	**20**
Max. torque [a) b)]			T_{2a}	Nm	48	60	83	48	60	83	56
				in.lb	425	531	735	425	531	735	496
Max. acceleration torque [b)] (max. 1000 cycles per hour)			T_{2B}	Nm	40	50	66	40	50	66	42
				in.lb	354	443	584	354	443	584	372
Nominal torque (at n_{1N})			T_{2N}	Nm	28	28	28	28	28	28	18
				in.lb	248	248	248	248	248	248	159
Emergency stop torque [a) b)] (permitted 1000 times during the service life of the gearbox)			T_{2Not}	Nm	100	100	100	100	100	100	100
				in.lb	885	885	885	885	885	885	885
Permitted average input speed (at T_{2N} and 20 °C ambient temperature) [d)]			n_{1N}	n_{1T}	2900	2900	3100	3400	3400	3600	3600
Max. input speed			n_{1Max}	rpm	6000	6000	6000	6000	6000	6000	6000
Mean no load running torque [b)] (at n_1 = 3000 rpm and 20 °C gearbox temperature)			T_{012}	Nm	1.5	1.3	1.1	0.8	0.7	0.6	0.5
				in.lb	13	12	10	7	6	5	4
Max. backlash			j_t	arcmin	Standard ≤ 5 / Reduced ≤ 3						
Torsional rigidity [b)]			C_{t21}	Nm/arcmin	4.8	6.2	7.6	6.1	7.4	8.5	7.3
				in.lb/arcmin	42	55	67	54	65	75	65
Tilting rigidity			C_{2K}	Nm/arcmin	85						
				in.lb/arcmin	752						
Max. axial force [c)]			F_{2AMax}	N	2119						
				lb_f	477						
Max. tilting moment			M_{2KMax}	Nm	110						
				in.lb	974						
Efficiency at full load			η	%	95						
Service life			L_h	h	> 20000						
Weight (incl. standard adapter plate)			m	kg	2.6						
				lb_m	6						
Operating noise (at reference ratio and reference speed – ratio-specific values available in cymex®)			L_{PA}	dB(A)	≤ 68						
Max. permitted housing temperature				°C	+90						
				F	194						
Ambient temperature				°C	0 to +40						
				F	32 to 104						
Lubrication					Lubricated for life						
Direction of rotation					In- and output same direction						
Protection class					IP 65						
Metal bellows coupling (recommended product type – validate sizing with cymex®)					BCT - 00015AAX - 031.500						
Bore diameter of coupling on the application side				mm	X = 012.000 - 028.000						
Mass moment of inertia (relates to the drive) Clamping hub diameter [mm]	C	14	J_1	$kgcm^2$	0.72	0.7	0.66	0.44	0.43	0.43	0.43
				10^{-3} in.lb.s²	0.64	0.62	0.58	0.39	0.38	0.38	0.38
	E	19	J_1	$kgcm^2$	1.05	1.03	0.99	0.77	0.76	0.76	0.75
				10^{-3} in.lb.s²	1	1	1	1	1	1	1

Please use our sizing software cymex® for a detailed sizing – **www.wittenstein-cymex.com**
Please contact us for optimum sizing at S1 conditions (Continuous operation).

[a)] At max. 10 % M_{2KMax}
[b)] Valid for standard clamping hub diameter
[c)] Refers to center of the output shaft or flange
[d)] Please reduce input speed at higher ambient temperatures

View A

Motor shaft diameter [mm]

2-stage

up to 14/19 [4] (C[5]/E) clamping hub diameter

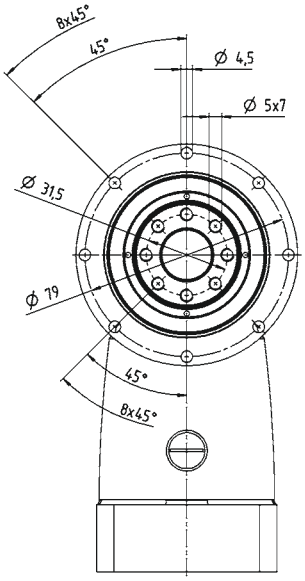

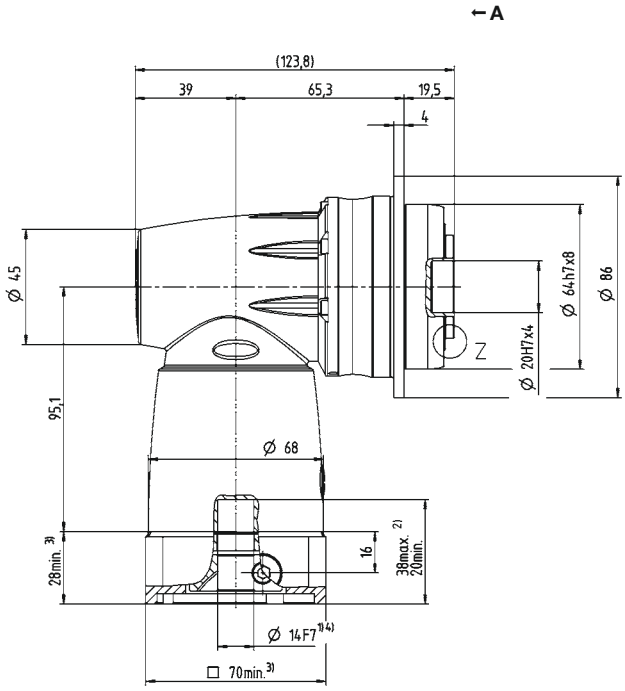

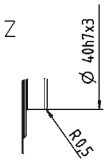

See technical data sheet for available clamping hub diameters (mass moment of inertia). Dimensions available on request.

Non-tolerated dimensions are nominal dimensions
1) Check motor shaft fit
2) Min./Max. permissible motor shaft length. Longer motor shafts are possible, please contact alpha.
3) The dimensions depend on the motor
4) Smaller motor shaft diameter is compensated by a bushing with a minimum thickness of 1 mm
5) Standard clamping hub diameter

TPC+ 010 MF 2-stage

				2-stage						
Ratio		i		**4**	**5**	**7**	**8**	**10**	**14**	**20**
Max. torque [a) b)]		T_{2a}	*Nm*	144	180	210	144	180	210	168
			in.lb	1275	1593	1859	1275	1593	1859	1487
Max. acceleration torque [b)] (max. 1000 cycles per hour)		T_{2B}	*Nm*	120	150	172	120	150	172	126
			in.lb	1062	1328	1522	1062	1328	1522	1115
Nominal torque (at n_{1N})		T_{2N}	*Nm*	75	75	75	75	75	75	60
			in.lb	664	664	664	664	664	664	531
Emergency stop torque [a) b)] (permitted 1000 times during the service life of the gearbox)		T_{2Not}	*Nm*	192	240	251	248	251	251	251
			in.lb	1699	2124	2222	2195	2222	2222	2222
Permitted average input speed (at T_{2N} and 20 °C ambient temperature) [d)]		n_{1N}	n_{1T}	2100	2100	2300	2650	2650	2800	2800
Max. input speed		n_{1Max}	*rpm*	6000	6000	6000	6000	6000	6000	6000
Mean no load running torque [b)] (at n_1 = 3000 rpm and 20 °C gearbox temperature)		T_{012}	*Nm*	2.5	2.2	1.9	1.1	1	0.8	0.7
			in.lb	22	19	17	10	9	7	6
Max. backlash		j_t	*arcmin*	Standard ≤ 4 / Reduced ≤ 2						
Torsional rigidity [b)]		C_{t21}	*Nm/arcmin*	12	16	20	16	20	23	21
			in.lb/arcmin	106	142	177	142	177	204	186
Tilting rigidity		C_{2K}	*Nm/arcmin*	225						
			in.lb/arcmin	1991						
Max. axial force [c)]		F_{2AMax}	*N*	2795						
			lb_f	629						
Max. tilting moment		M_{2KMax}	*Nm*	270						
			in.lb	2390						
Efficiency at full load		η	%	95						
Service life		L_h	*h*	> 20000						
Weight (incl. standard adapter plate)		m	*kg*	5.8						
			lb_m	13						
Operating noise (at reference ratio and reference speed – ratio-specific values available in cymex®)		L_{PA}	*dB(A)*	≤ 68						
Max. permitted housing temperature			*°C*	+90						
			F	194						
Ambient temperature			*°C*	0 to +40						
			F	32 to 104						
Lubrication				Lubricated for life						
Direction of rotation				In- and output same direction						
Protection class				IP 65						
Metal bellows coupling (recommended product type – validate sizing with cymex®)				BCT - 00060AAX - 050.000						
Bore diameter of coupling on the application side			*mm*	X = 014.000 - 035.000						
Mass moment of inertia (relates to the drive) Clamping hub diameter [mm]	E 19	J_1	$kgcm^2$	2.41	2.27	1.99	1.29	1.26	1.22	1.21
			10^{-3} $in.lb.s^2$	2.13	2.01	1.76	1.14	1.12	1.08	1.07
	H 28	J_1	$kgcm^2$	3.85	3.71	3.43	2.73	2.7	2.66	2.64
			10^{-3} $in.lb.s^2$	3.41	3.28	3.04	2.42	2.39	2.35	2.34

Please use our sizing software cymex® for a detailed sizing – **www.wittenstein-cymex.com**
Please contact us for optimum sizing at S1 conditions (Continuous operation).

a) At max. 10 % M_{2KMax}
b) Valid for standard clamping hub diameter
c) Refers to center of the output shaft or flange
d) Please reduce input speed at higher ambient temperatures

Motor shaft diameter [mm]

2-stage

up to 19/28 [4] (E[5]/H) clamping hub diameter

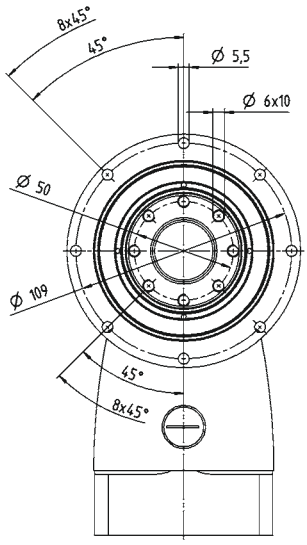

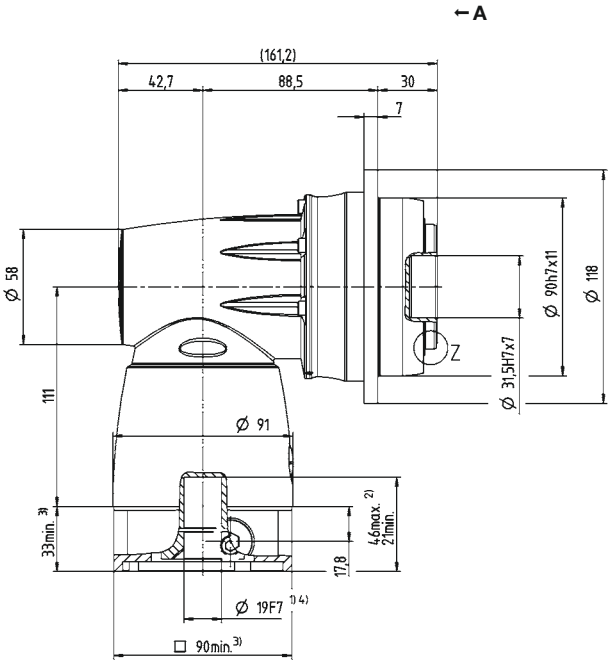

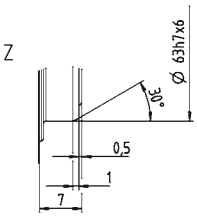

See technical data sheet for available clamping hub diameters (mass moment of inertia). Dimensions available on request.

Non-tolerated dimensions are nominal dimensions
1) Check motor shaft fit
2) Min./Max. permissible motor shaft length. Longer motor shafts are possible, please contact alpha.
3) The dimensions depend on the motor
4) Smaller motor shaft diameter is compensated by a bushing with a minimum thickness of 1 mm
5) Standard clamping hub diameter

TPC+ 025 MF 2-stage

				2-stage						
Ratio		i		**4**	**5**	**7**	**8**	**10**	**14**	**20**
Max. torque [a) b)]		T_{2a}	*Nm*	352	380	352	352	380	352	352
			in.lb	3115	3363	3115	3115	3363	3115	3115
Max. acceleration torque [b)] (max. 1000 cycles per hour)		T_{2B}	*Nm*	324	380	352	324	380	352	318
			in.lb	2868	3363	3115	2868	3363	3115	2815
Nominal torque (at n_{1N})		T_{2N}	*Nm*	170	170	170	180	175	170	120
			in.lb	1505	1505	1505	1593	1549	1505	1062
Emergency stop torque [a) b)] (permitted 1000 times during the service life of the gearbox)		T_{2Not}	*Nm*	540	625	625	625	625	625	625
			in.lb	4779	5532	5532	5532	5532	5532	5532
Permitted average input speed (at T_{2N} and 20 °C ambient temperature) [d)]		n_{1N}	n_{1T}	1900	1900	2100	2300	2300	2400	2400
Max. input speed		n_{1Max}	*rpm*	4500	4500	4500	4500	4500	4500	4500
Mean no load running torque [b)] (at n_1 = 3000 rpm and 20 °C gearbox temperature)		T_{012}	*Nm*	5.8	5.2	4.5	3.2	2.9	2.5	2.2
			in.lb	51	46	40	28	26	22	19
Max. backlash		j_t	*arcmin*	Standard ≤ 4 / Reduced ≤ 2						
Torsional rigidity [b)]		C_{t21}	*Nm/arcmin*	33	43	53	45	56	61	57
			in.lb/arcmin	292	381	469	398	496	540	504
Tilting rigidity		C_{2K}	*Nm/arcmin*	550						
			in.lb/arcmin	4868						
Max. axial force [c)]		F_{2AMax}	*N*	4800						
			lb_f	1080						
Max. tilting moment		M_{2KMax}	*Nm*	440						
			in.lb	3894						
Efficiency at full load		η	%	95						
Service life		L_h	*h*	> 20000						
Weight (incl. standard adapter plate)		m	*kg*	10.5						
			lb_m	23						
Operating noise (at reference ratio and reference speed – ratio-specific values available in cymex®)		L_{PA}	*dB(A)*	≤ 68						
Max. permitted housing temperature			*°C*	+90						
			F	194						
Ambient temperature			*°C*	0 to +40						
			F	32 to 104						
Lubrication				Lubricated for life						
Direction of rotation				In- and output same direction						
Protection class				IP 65						
Metal bellows coupling (recommended product type – validate sizing with cymex®)				BCT - 00150AAX - 063.000						
Bore diameter of coupling on the application side			*mm*	X = 019.000 - 042.000						
Mass moment of inertia (relates to the drive) Clamping hub diameter [mm]	H 28	J_1	$kgcm^2$	8.3	7.9	7	5.1	5	4.9	4.8
			10^{-3} $in.lb.s^2$	7	7	6	5	4	4	4
	K 38	J_1	$kgcm^2$	15.4	14.9	14.1	12.2	12.1	12	11.9
			10^{-3} $in.lb.s^2$	14	13	12	11	11	11	11

Please use our sizing software cymex® for a detailed sizing – **www.wittenstein-cymex.com**
Please contact us for optimum sizing at S1 conditions (Continuous operation).

a) At max. 10 % M_{2KMax}
b) Valid for standard clamping hub diameter
c) Refers to center of the output shaft or flange
d) Please reduce input speed at higher ambient temperatures

View A

Motor shaft diameter [mm]

2-stage

up to 28/38 [4] (H[5]/K) clamping hub diameter

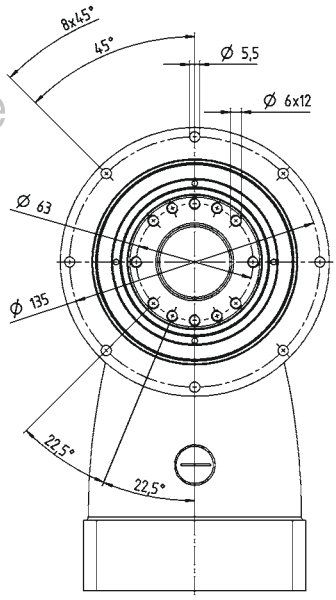

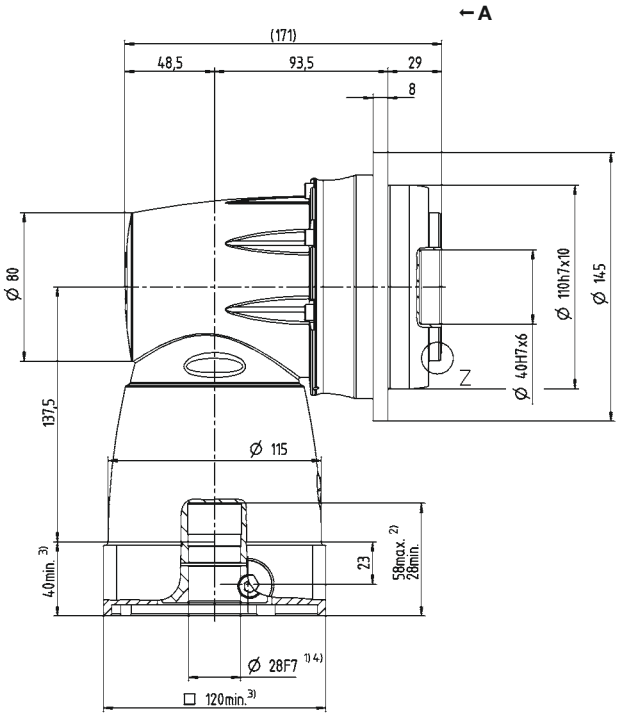

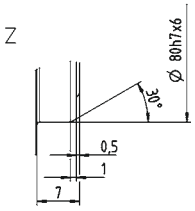

See technical data sheet for available clamping hub diameters (mass moment of inertia). Dimensions available on request.

Non-tolerated dimensions are nominal dimensions
1) Check motor shaft fit
2) Min./Max. permissible motor shaft length. Longer motor shafts are possible, please contact alpha.
3) The dimensions depend on the motor
4) Smaller motor shaft diameter is compensated by a bushing with a minimum thickness of 1 mm
5) Standard clamping hub diameter

TPC+ 050 MF 2-stage

				2-stage						
Ratio			*i*	**4**	**5**	**7**	**8**	**10**	**14**	**20**
Max. torque [a) b)]			T_{2a}	*Nm*	840	992	868	840	992	868	720
				in.lb	7435	8780	7682	7435	8780	7682	6373
Max. acceleration torque [b)] (max. 1000 cycles per hour)			T_{2B}	*Nm*	700	840	840	700	840	840	648
				in.lb	6196	7435	7435	6196	7435	7435	5735
Nominal torque (at n_{1N})			T_{2N}	*Nm*	370	370	370	370	370	370	240
				in.lb	3275	3275	3275	3275	3275	3275	2124
Emergency stop torque [a) b)] (permitted 1000 times during the service life of the gearbox)			T_{2Not}	*Nm*	960	1200	1250	1240	1250	1250	1250
				in.lb	8497	10621	11064	10975	11064	11064	11064
Permitted average input speed (at T_{2N} and 20 °C ambient temperature) [d)]			n_{1N}	n_{1T}	1200	1200	1300	1500	1500	1600	1600
Max. input speed			n_{1Max}	*rpm*	4500	4500	4500	4500	4500	4500	4500
Mean no load running torque [b)] (at n_1 = 3000 rpm and 20 °C gearbox temperature)			T_{012}	*Nm*	12	10.5	8.8	5.7	5	4.1	3.4
				in.lb	106	93	78	50	44	36	30
Max. backlash			j_t	*arcmin*	Standard ≤ 4 / Reduced ≤ 2						
Torsional rigidity [b)]			C_{t21}	*Nm/arcmin*	73	93	111	93	113	124	111
				in.lb/arcmin	646	823	982	823	1000	1097	982
Tilting rigidity			C_{2K}	*Nm/arcmin*	560						
				in.lb/arcmin	4956						
Max. axial force [c)]			F_{2AMax}	*N*	6130						
				lb_f	1379						
Max. tilting moment			M_{2KMax}	*Nm*	1335						
				in.lb	11816						
Efficiency at full load			η	%	95						
Service life			L_h	*h*	> 20000						
Weight (incl. standard adapter plate)			*m*	*kg*	21.5						
				lb_m	48						
Operating noise (at reference ratio and reference speed – ratio-specific values available in cymex®)			L_{PA}	*dB(A)*	≤ 70						
Max. permitted housing temperature				*°C*	+90						
				F	194						
Ambient temperature				*°C*	0 to +40						
				F	32 to 104						
Lubrication					Lubricated for life						
Direction of rotation					In- and output same direction						
Protection class					IP 65						
Metal bellows coupling (recommended product type – validate sizing with cymex®)					BCT - 00300AAX - 080.000						
Bore diameter of coupling on the application side				*mm*	X = 024.000 - 060.000						
Mass moment of inertia (relates to the drive) Clamping hub diameter [mm]	K	38	J_1	$kgcm^2$	32.3	30.8	27.9	19.4	19	18.7	18.5
				10^{-3} $in.lb.s^2$	29	27	25	17	17	17	16

Please use our sizing software cymex® for a detailed sizing – **www.wittenstein-cymex.com**
Please contact us for optimum sizing at S1 conditions (Continuous operation).

[a)] At max. 10 % M_{2KMax}
[b)] Valid for standard clamping hub diameter
[c)] Refers to center of the output shaft or flange
[d)] Please reduce input speed at higher ambient temperatures

View A

Motor shaft diameter [mm]

2-stage

up to 38 [4] (K)[5] clamping hub diameter

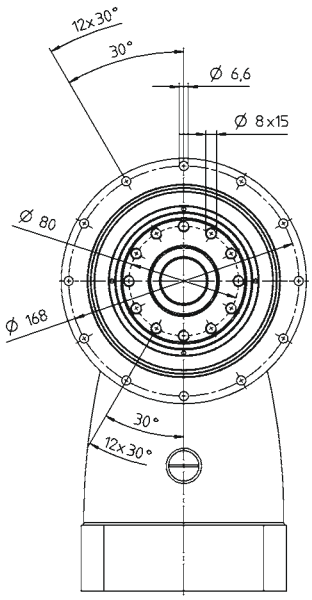

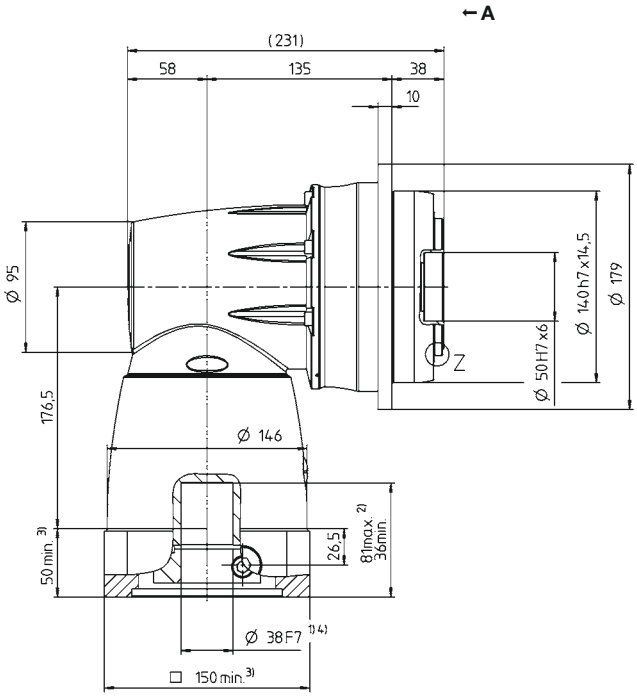

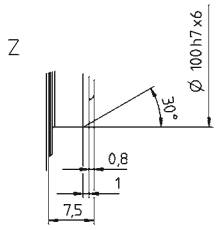

See technical data sheet for available clamping hub diameters (mass moment of inertia). Dimensions available on request.

Non-tolerated dimensions are nominal dimensions
1) Check motor shaft fit
2) Min. / Max. permissible motor shaft length. Longer motor shafts are possible, please contact alpha.
3) The dimensions depend on the motor
4) Smaller motor shaft diameter is compensated by a bushing with a minimum thickness of 1 mm
5) Standard clamping hub diameter

				2-stage						
Ratio			*i*	**4**	**5**	**7**	**8**	**10**	**14**	**20**
Max. torque [a) b)]			T_{2a}	*Nm*	1512	1890	2560	1512	1890	2560	2240
				in.lb	13382	16728	22658	13382	16728	22658	19826
Max. acceleration torque [b)] (max. 1000 cycles per hour)			T_{2B}	*Nm*	1260	1575	1920	1260	1575	1920	1680
				in.lb	11152	13940	16994	11152	13940	16994	14869
Nominal torque (at n_{1N})			T_{2N}	*Nm*	700	750	750	700	750	750	750
				in.lb	6196	6638	6638	6196	6638	6638	6638
Emergency stop torque [a) b)] (permitted 1000 times during the service life of the gearbox)			T_{2Not}	*Nm*	1560	1950	2730	2740	3075	3075	3075
				in.lb	13807	17259	24163	24251	27216	27216	27216
Permitted average input speed (at T_{2N} and 20 °C ambient temperature) [d)]			n_{1N}	n_{1T}	900	900	1000	1200	1200	1300	1300
Max. input speed			n_{1Max}	*rpm*	4000	4000	4000	4000	4000	4000	4000
Mean no load running torque [b)] (at n_1 = 3000 rpm and 20 °C gearbox temperature)			T_{012}	*Nm*	25	22	19	13.5	12	10	9
				in.lb	221	195	168	119	106	89	80
Max. backlash			j_t	*arcmin*	Standard ≤ 4 / Reduced ≤ 2						
Torsional rigidity [b)]			C_{t21}	*Nm/arcmin*	181	242	324	278	345	407	390
				in.lb/arcmin	1602	2142	2868	2461	3054	3602	3452
Tilting rigidity			C_{2K}	*Nm/arcmin*	1452						
				in.lb/arcmin	12851						
Max. axial force [c)]			F_{2AMax}	*N*	10050						
				lb_f	2261						
Max. tilting moment			M_{2KMax}	*Nm*	3280						
				in.lb	29031						
Efficiency at full load			η	%	95						
Service life			L_h	*h*	> 20000						
Weight (incl. standard adapter plate)			*m*	*kg*	50.7						
				lb_m	112						
Operating noise (at reference ratio and reference speed – ratio-specific values available in cymex®)			L_{PA}	*dB(A)*	≤ 70						
Max. permitted housing temperature				*°C*	+90						
				F	194						
Ambient temperature				*°C*	0 to +40						
				F	32 to 104						
Lubrication					Lubricated for life						
Direction of rotation					In- and output same direction						
Protection class					IP 65						
Metal bellows coupling (recommended product type – validate sizing with cymex®)					BCT - 01500AAX - 125.000						
Bore diameter of coupling on the application side				*mm*	X = 050.000 - 080.000						
Mass moment of inertia (relates to the drive) Clamping hub diameter [mm]	M	48	J_1	$kgcm^2$	121.2	112.6	94.7	52.1	50	47.9	46.7
				10^{-3} $in.lb.s^2$	107	100	84	46	44	42	41

Please use our sizing software cymex® for a detailed sizing – **www.wittenstein-cymex.com**
Please contact us for optimum sizing at S1 conditions (Continuous operation).

[a)] At max. 10 % M_{2KMax}
[b)] Valid for standard clamping hub diameter
[c)] Refers to center of the output shaft or flange
[d)] Please reduce input speed at higher ambient temperatures

View A

Motor shaft diameter [mm]

2-stage

up to 48 [4] (M)[5] clamping hub diameter

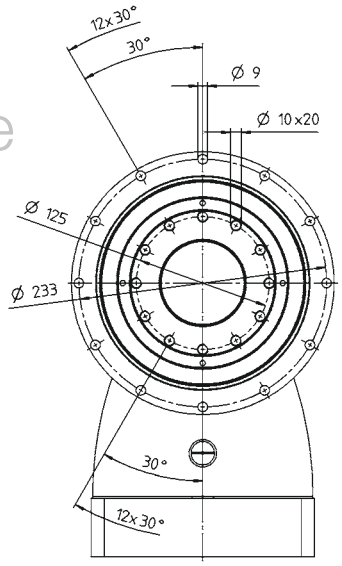

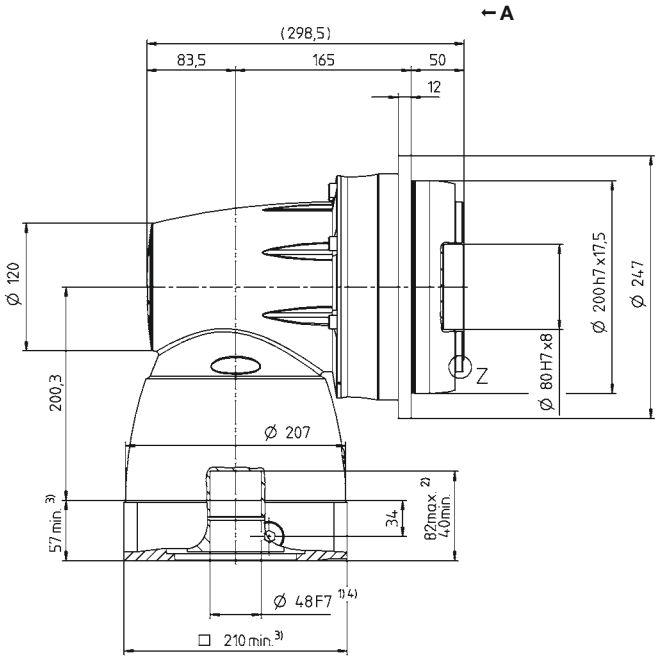

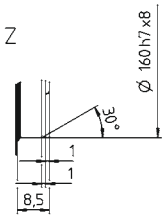

See technical data sheet for available clamping hub diameters (mass moment of inertia). Dimensions available on request.

Non-tolerated dimensions are nominal dimensions
1) Check motor shaft fit
2) Min. / Max. permissible motor shaft length. Longer motor shafts are possible, please contact alpha.
3) The dimensions depend on the motor
4) Smaller motor shaft diameter is compensated by a bushing with a minimum thickness of 1 mm
5) Standard clamping hub diameter

Worm gearboxes VH+ / VS+ / VT+
Flexible powerhouses

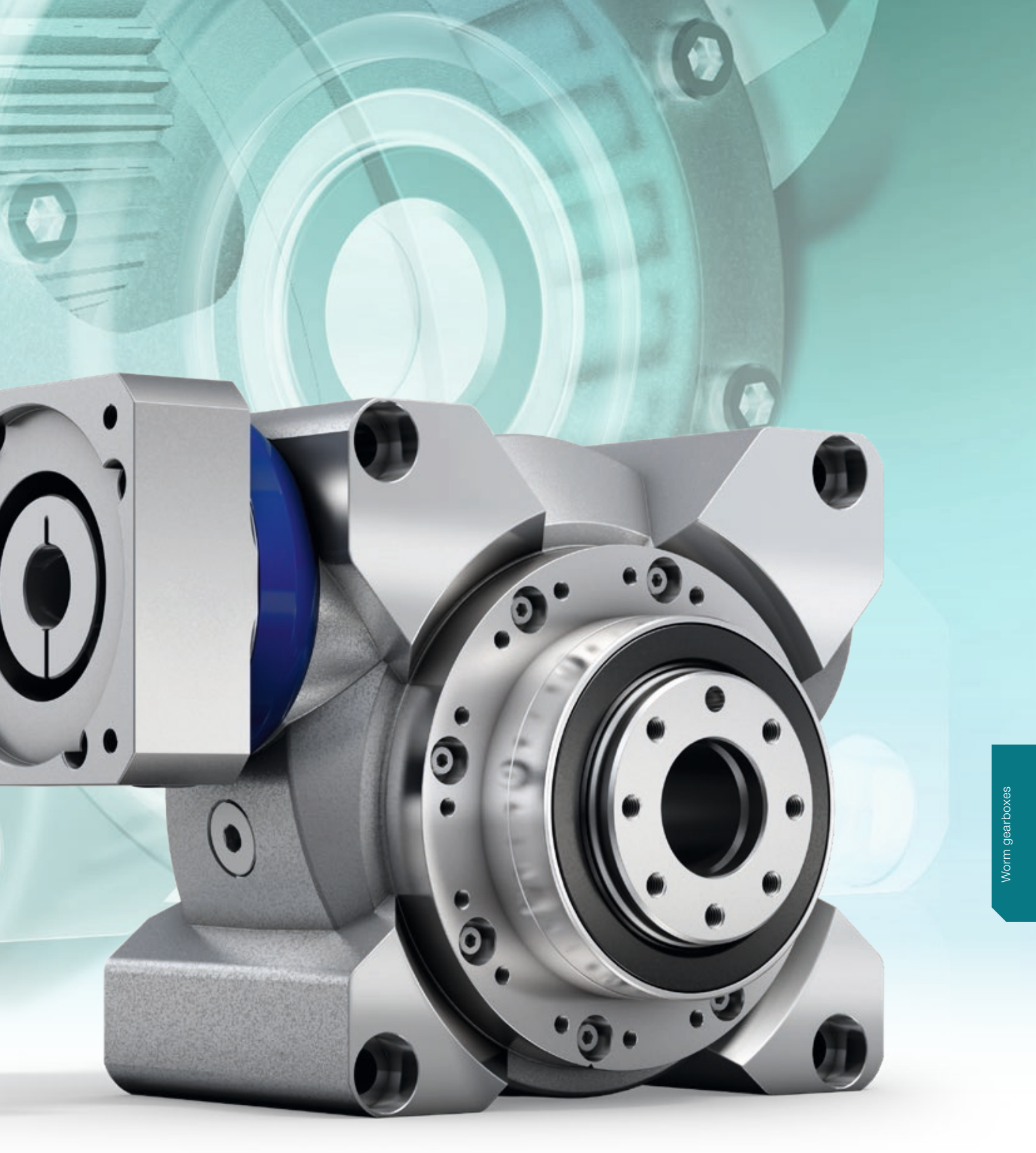

VH⁺ / VS⁺ / VT⁺ – Precision worm gearboxes

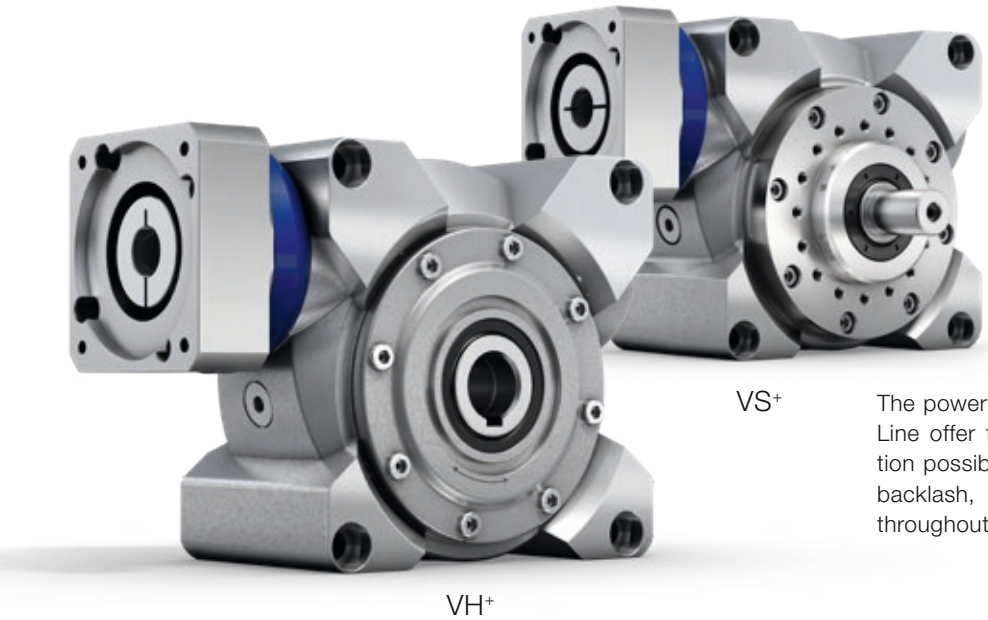

The powerful V-Drive worm gears of the alpha Advanced Line offer flexible output shapes and countless application possibilities. With high-quality toothing and constant backlash, the gearboxes remain exceptionally efficient throughout their entire service life.

V-Drive Advanced compared to the industry standard

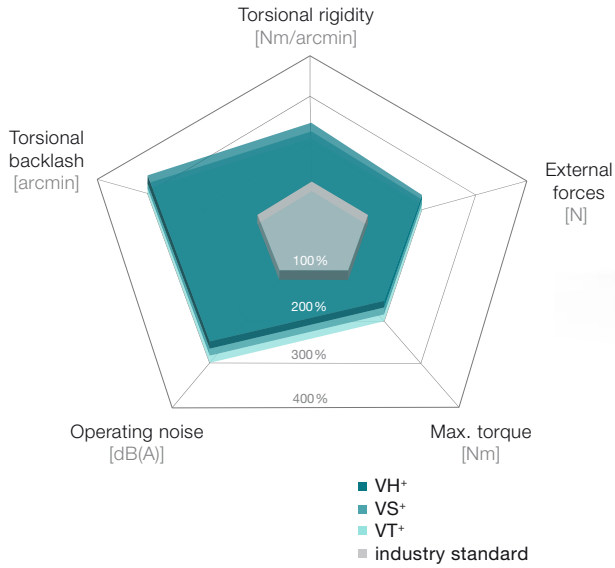

Product highlights

Max. torsional backlash [arcmin] ≤ 3 (Standard)
≤ 2 (Reduced)

Constant, low torsional backlash
consistently high quality and high positioning accuracy guaranteed throughout its lifespan

No stick-slip effect
owing to the enhanced hollow-flank teeth

Optimally sized output bearing for absorbing high axial and radial forces in cyclic or continuous operation

Hollow-flank teeth with high overload capacity owing to the low specific tooth pressure

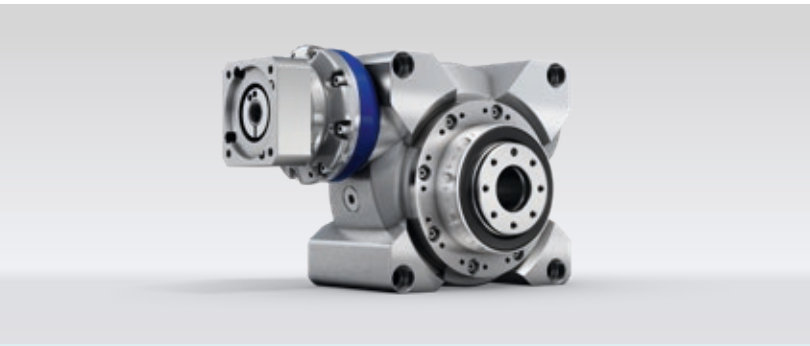

VT⁺ with integrated planetary input stage for higher ratios

VS⁺ in linear system

Hollow-flank toothing:
high accuracy of torsional backlash throughout the entire service life;
High efficiency and extremely high power density

Radial shaft seal:
very long service life;
optimized for continous operation

Input bearing:
bearing package for absorbing axial and radial forces;
very well suited for high input speeds

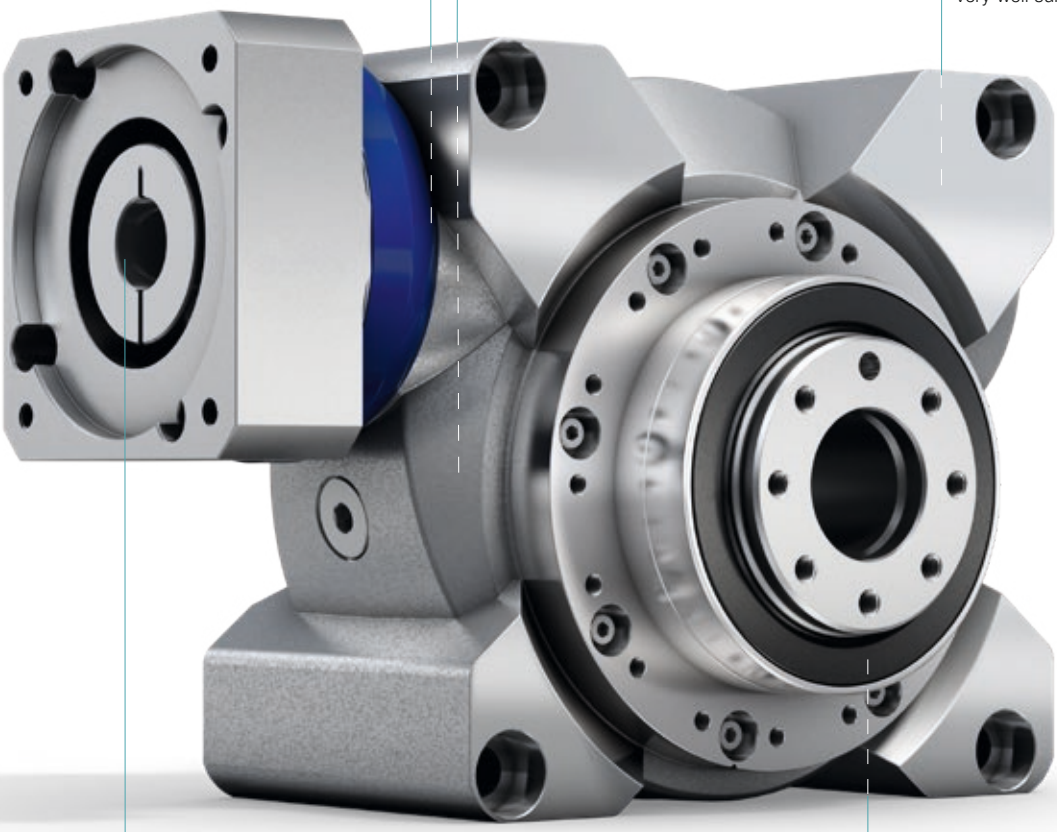

VT+

Output bearing:
high overload capacity for absorbing axial and radial forces

Metal bellows coupling:
completely backlash-free;
fatigue endurable and maintenance-free;
easy to mount;
integrated length compensation feature protects the motor

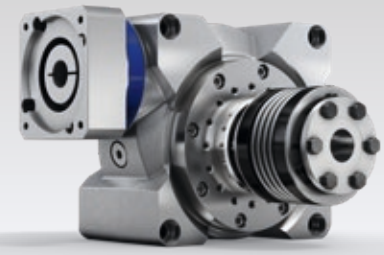

VS+ with metal bellows coupling BC3

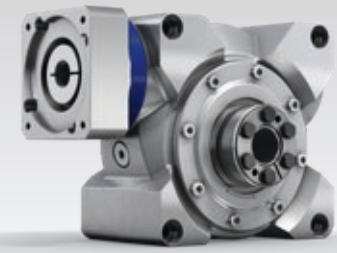

VH+ with shrink disk

VH+ 040 MF 1-/2-stage

			1-stage						2-stage						
Ratio	*i*		**4**	**7**	**10**	**16**	**28**	**40**	**50**	**70**	**100**	**140**	**200**	**280**	**400**
Max. torque [a) b)] (at n_1 = 500 rpm)	T_{2a}	*Nm*	74	82	98	101	106	98	98	82	98	106	98	106	98
		in.lb	655	726	867	894	938	867	867	726	867	938	867	938	867
Torque for constant backlash (over the lifetime)	T_{2Servo}	*Nm*	17	24	25	26	29	25	25	24	25	29	25	29	25
		in.lb	150	212	221	230	257	221	221	212	221	257	221	257	221
Emergency stop torque [a) b)] (permitted 1000 times during the service life of the gearbox)	T_{2Not}	*Nm*	118	126	125	129	134	122	125	126	125	134	122	134	122
		in.lb	1044	1115	1106	1142	1186	1080	1106	1115	1106	1186	1080	1186	1080
Permitted average input speed (at 20 °C ambient temperature) [d)]	n_{1N}	*rpm*	4000						4400						
Max. input speed	n_{1Max}	*rpm*	6000												
Mean no load running torque [b)] (at n_1 = 3000 rpm and 20 °C gearbox temperature)	T_{012}	*Nm*	0.8	0.7	0.6	0.5	0.4	0.4	0.4	0.2	0.2	0.4	0.4	0.3	0.2
		in.lb	7.1	6.2	5.3	4.4	3.5	3.5	3.5	1.8	1.8	3.5	3.5	2.7	1.8
Max. backlash	j_t	*arcmin*	Standard ≤ 3 / Reduced ≤ 2						Standard ≤ 4 / Reduced ≤ 3						
Torsional rigidity [b)]	C_{t21}	*Nm/arcmin*	4.5						5						
		in.lb/arcmin	40						40						
Max. axial force [c)]	F_{2AMax}	*N*	3000												
		lb_f	675												
Max. lateral force [c)]	F_{2QMax}	*N*	2400												
		lb_f	540												
Max. tilting moment	M_{2KMax}	*Nm*	205												
		in.lb	1814												
Efficiency at full load (at n_1 = 500 rpm)	η	%	93	90	88	82	73	67	86	88	86	71	65	71	65
Service life	L_h	*h*	> 20000												
Weight (incl. standard adapter plate)	*m*	*kg*	5.0						5.6						
		lb_m	11.1						12.0						
Operating noise (at reference ratio and reference speed – ratio-specific values available in cymex®)	L_{PA}	*dB(A)*	≤ 54						≤ 58						
Max. permitted housing temperature		*°C*	+90												
		F	194												
Ambient temperature		*°C*	-15 to +40												
		F	5 to 104												
Lubrication			Lubricated for life												
Direction of rotation			In- and output same direction												
Protection class			IP 65												
Shrink disc (Standard version)			SD 024x050 S2												
Max. torque (without axial force)	T_{max}	*Nm*	250												
Mass moment of inertia (relates to the drive) Clamping hub diameter [mm] — C 14	J_1	*kgcm²*	0.52	0.38	0.34	0.32	0.32	0.31	0.25	0.28	0.24	0.23	0.19	0.18	0.18
		10^{-3} *in.lb.s²*	0.46	0.34	0.30	0.28	0.28	0.27	0.22	0.25	0.21	0.20	0.17	0.16	0.16
Mass moment of inertia (relates to the drive) Clamping hub diameter [mm] — E 19	J_1	*kgcm²*	0.54	0.40	0.37	0.35	0.34	0.33	0.36	0.40	0.36	0.34	0.30	0.30	0.30
		10^{-3} *in.lb.s²*	0.48	0.35	0.33	0.31	0.30	0.29	0.32	0.35	0.32	0.30	0.27	0.27	0.27

Please use our sizing software cymex® for a detailed sizing – **www.wittenstein-cymex.com**
Please contact us for optimum sizing at S1 conditions (Continuous operation).

[a)] At max. 10 % F_{2QMax}
[b)] Valid for standard clamping hub diameter
[c)] Refers to center of the output shaft or flange
[d)] Please reduce input speed at higher ambient temperatures

View A

Motor shaft diameter [mm]

1-stage

up to 14/19 [4]
(C[6]/E) clamping
hub diameter

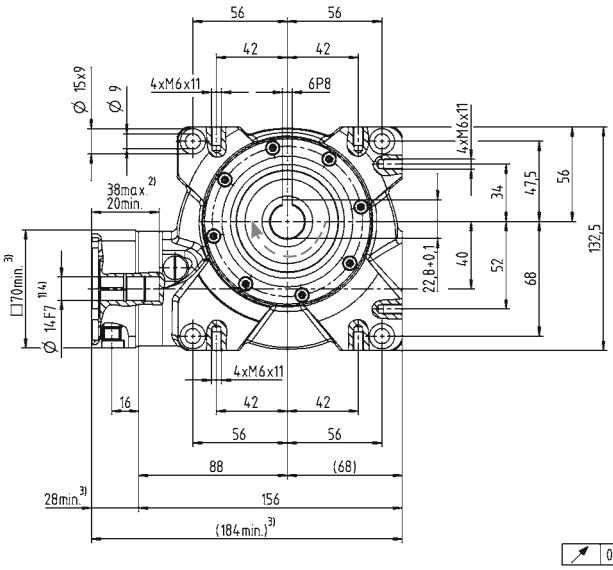

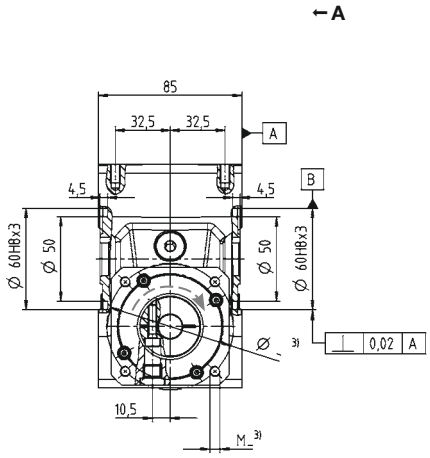

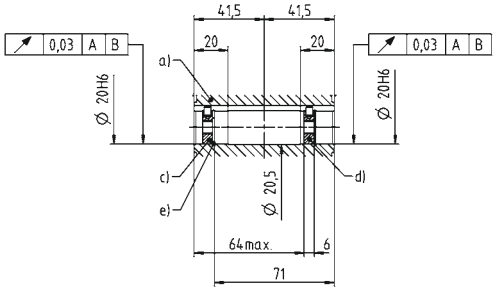

2-stage

up to 14/19 [4]
(C[6]/E) clamping
hub diameter

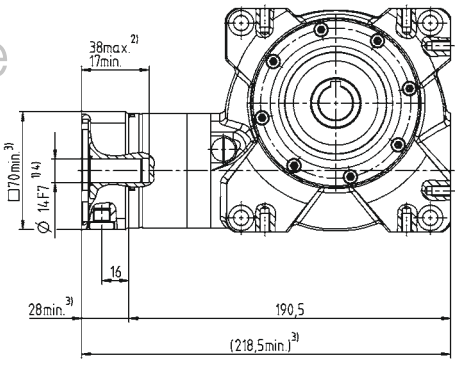

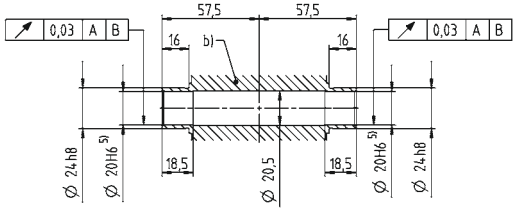

a) Hollow shaft, keywayed
b) Hollow shaft, smooth
c) End disc for screw M6
d) End disc as forcing washer for screw M8
e) Locking ring – DIN 472

See technical data sheet for available clamping hub diameters (mass moment of inertia). Dimensions available on request.

Non-tolerated dimensions are nominal dimensions
1) Check motor shaft fit.
2) Min./Max. permissible motor shaft length.
Longer motor shafts are adaptable, please contact us.
3) The dimensions depend on the motor.
4) Smaller motor shaft diameter is compensated by a bushing with a minimum thickness of 1 mm.
5) Tolerance h6 for mounted shaft.
6) Standard clamping hub diameter

VH+ 050 MF 1-/2-stage

			1-stage						2-stage						
Ratio	*i*		**4**	**7**	**10**	**16**	**28**	**40**	**50**	**70**	**100**	**140**	**200**	**280**	**400**
Max. torque [a) b)] (at n_1 = 500 rpm)	T_{2a}	*Nm*	165	180	182	193	204	183	182	180	182	204	183	204	183
		in.lb	1460	1593	1611	1708	1805	1620	1611	1593	1611	1805	1620	1805	1620
Torque for constant backlash (over the lifetime)	T_{2Servo}	*Nm*	54	71	74	81	90	74	74	71	74	90	74	90	74
		in.lb	478	628	655	717	797	655	655	628	655	797	655	797	655
Emergency stop torque [a) b)] (permitted 1000 times during the service life of the gearbox)	T_{2Not}	*Nm*	230	242	242	250	262	236	242	242	242	262	236	262	236
		in.lb	2036	2142	2142	2213	2319	2089	2142	2142	2142	2319	2089	2319	2089
Permitted average input speed (at 20 °C ambient temperature) [d)]	n_{1N}	*rpm*	4000						3500						
Max. input speed	n_{1Max}	*rpm*	6000												
Mean no load running torque [b)] (at n_1 = 3000 rpm and 20 °C gearbox temperature)	T_{012}	*Nm*	2.3	2.2	1.6	1.5	1.2	1.1	0.7	0.5	0.4	0.6	0.6	0.4	0.4
		in.lb	20.4	19.5	14.2	13.3	10.6	9.7	6.2	4.4	3.5	5.3	5.3	3.5	3.5
Max. backlash	j_t	*arcmin*	Standard ≤ 3 / Reduced ≤ 2						Standard ≤ 4 / Reduced ≤ 3						
Torsional rigidity [b)]	C_{t21}	*Nm/arcmin*	8												
		in.lb/arcmin	71												
Max. axial force [c)]	F_{2AMax}	*N*	5000												
		lb_f	1125												
Max. lateral force [c)]	F_{2QMax}	*N*	3800												
		lb_f	855												
Max. tilting moment	M_{2KMax}	*Nm*	409												
		in.lb	3620												
Efficiency at full load (at n_1 = 500 rpm)	η	%	92	89	86	82	72	64	84	87	84	70	62	70	62
Service life	L_h	*h*	> 20000												
Weight (incl. standard adapter plate)	*m*	*kg*	8.0						8.7						
		lb_m	17.7						19.0						
Operating noise (at reference ratio and reference speed – ratio-specific values available in cymex®)	L_{PA}	*dB(A)*	≤ 62												
Max. permitted housing temperature		*°C*	+90												
		F	194												
Ambient temperature		*°C*	-15 to +40												
		F	5 to 104												
Lubrication			Lubricated for life												
Direction of rotation			In- and output same direction												
Protection class			IP 65												
Shrink disc (Standard version)			SD 030x060 S2V												
Max. torque (without axial force)	T_{max}	*Nm*	550												
Mass moment of inertia (relates to the drive) Clamping hub diameter [mm] — C 14	J_1	*kgcm²*	-	-	-	-	-	-	0.80	0.80	0.80	0.70	0.70	0.70	0.70
		10^{-3} *in.lb.s²*	-	-	-	-	-	-	0.71	0.71	0.71	0.62	0.62	0.62	0.62
Mass moment of inertia (relates to the drive) Clamping hub diameter [mm] — E 19	J_1	*kgcm²*	1.50	1.21	1.12	1.03	1.00	1.05	1.20	1.30	1.20	1.10	1.10	1.10	1.10
		10^{-3} *in.lb.s²*	1.33	1.07	0.99	0.91	0.89	0.93	1.06	1.15	1.06	0.97	0.97	0.97	0.97

Please use our sizing software cymex® for a detailed sizing – **www.wittenstein-cymex.com**
Please contact us for optimum sizing at S1 conditions (Continuous operation).

a) At max. 10 % F_{2QMax}
b) Valid for standard clamping hub diameter
c) Refers to center of the output shaft or flange
d) Please reduce input speed at higher ambient temperatures

View A

Motor shaft diameter [mm]

1-stage

up to 19 [4] (E) [6] clamping hub diameter

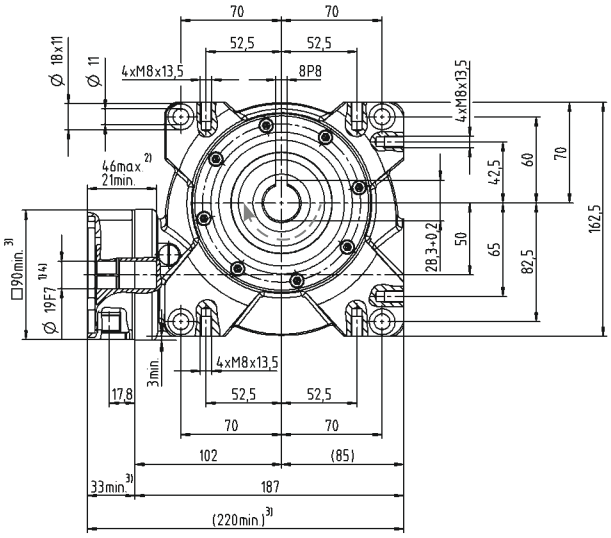

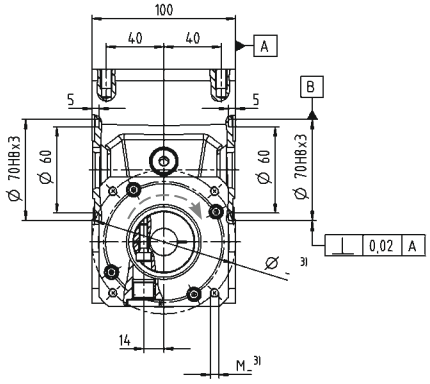

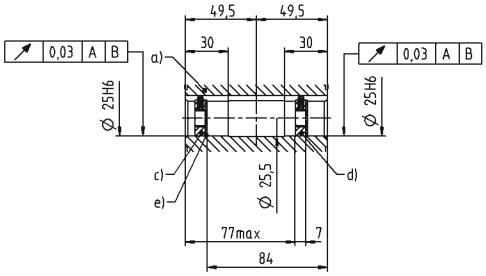

2-stage

up to 14/19 [4] (C [6]/E) clamping hub diameter

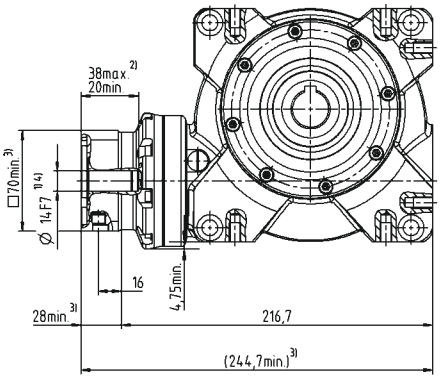

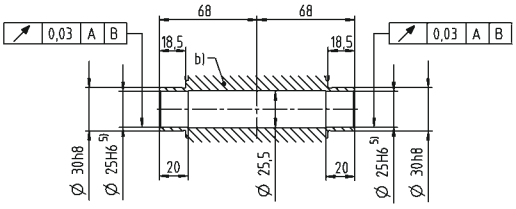

a) Hollow shaft, keywayed
b) Hollow shaft, smooth
c) End disc for screw M10
d) End disc as forcing washer for screw M12
e) Locking ring – DIN 472

See technical data sheet for available clamping hub diameters (mass moment of inertia). Dimensions available on request.

Non-tolerated dimensions are nominal dimensions
[1] Check motor shaft fit.
[2] Min./Max. permissible motor shaft length. Longer motor shafts are adaptable, please contact us.
[3] The dimensions depend on the motor.
[4] Smaller motor shaft diameter is compensated by a bushing with a minimum thickness of 1 mm.
[5] Tolerance h6 for mounted shaft.
[6] Standard clamping hub diameter

VH⁺ 063 MF 1-/2-stage

			1-stage						2-stage						
Ratio	*i*		**4**	**7**	**10**	**16**	**28**	**40**	**50**	**70**	**100**	**140**	**200**	**280**	**400**
Max. torque [a) b)] (at n_1 = 500 rpm)	T_{2a}	*Nm*	319	353	364	372	392	363	364	353	364	392	363	392	363
		in.lb	2823	3124	3221	3292	3469	3213	3221	3124	3221	3469	3213	3469	3213
Torque for constant backlash (over the lifetime)	T_{2Servo}	*Nm*	198	210	225	221	229	226	225	210	225	229	226	229	226
		in.lb	1752	1859	1991	1956	2027	2000	1991	1859	1991	2027	2000	2027	2000
Emergency stop torque [a) b)] (permitted 1000 times during the service life of the gearbox)	T_{2Not}	*Nm*	460	484	491	494	518	447	491	484	494	518	447	518	447
		in.lb	4071	4283	4345	4372	4584	3956	4345	4283	4372	4584	3956	4584	3956
Permitted average input speed (at 20 °C ambient temperature) [d)]	n_{1N}	*rpm*	4000						3100						
Max. input speed	n_{1Max}	*rpm*	4500												
Mean no load running torque [b)] (at n_1 = 3000 rpm and 20 °C gearbox temperature)	T_{012}	*Nm*	4.2	3.1	3	2.4	2.3	2.2	1.2	0.7	0.7	1.1	1.1	0.8	0.6
		in.lb	37.2	27.4	26.6	21.2	20.4	19.5	10.6	6.2	6.2	9.7	9.7	7.1	5.3
Max. backlash	j_t	*arcmin*	Standard ≤ 3 / Reduced ≤ 2						Standard ≤ 4 / Reduced ≤ 3						
Torsional rigidity [b)]	C_{t21}	*Nm/arcmin*	28												
		in.lb/arcmin	248												
Max. axial force [c)]	F_{2AMax}	*N*	8250												
		lb_f	1856												
Max. lateral force [c)]	F_{2QMax}	*N*	6000												
		lb_f	1350												
Max. tilting moment	M_{2KMax}	*Nm*	843												
		in.lb	7461												
Efficiency at full load (at n_1 = 500 rpm)	η	%	93	91	88	83	74	68	86	89	86	72	66	72	66
Service life	L_h	*h*	> 20000												
Weight (incl. standard adapter plate)	*m*	*kg*	13.0						13.7						
		lb_m	28.7						30.0						
Operating noise (at reference ratio and reference speed – ratio-specific values available in cymex®)	L_{PA}	*dB(A)*	≤ 64												
Max. permitted housing temperature		*°C*	+90												
		F	194												
Ambient temperature		*°C*	-15 to +40												
		F	5 to 104												
Lubrication			Lubricated for life												
Direction of rotation			In- and output same direction												
Protection class			IP 65												
Shrink disc (Standard version)			SD 036x072 S2V												
Max. torque (without axial force)	T_{max}	*Nm*	640												
Mass moment of inertia (relates to the drive) Clamping hub diameter [mm] — E 19	J_1	*kgcm²*	-	-	-	-	-	-	2.60	2.80	2.50	2.40	2.40	2.40	2.30
		10^{-3} *in.lb.s²*	-	-	-	-	-	-	2.30	2.48	2.21	2.12	2.12	2.12	2.04
G 24	J_1	*kgcm²*	-	-	-	-	-	-	4.10	4.30	4.10	4.00	4.00	3.90	3.90
		10^{-3} *in.lb.s²*	-	-	-	-	-	-	3.63	3.81	3.63	3.54	3.54	3.45	3.45
H 28	J_1	*kgcm²*	4.80	3.89	3.65	3.56	3.52	3.47	-	-	-	-	-	-	-
		10^{-3} *in.lb.s²*	4.25	3.44	3.23	3.15	3.12	3.07	-	-	-	-	-	-	-

Please use our sizing software cymex® for a detailed sizing – **www.wittenstein-cymex.com**
Please contact us for optimum sizing at S1 conditions (Continuous operation).

[a)] At max. 10 % F_{2QMax}
[b)] Valid for standard clamping hub diameter
[c)] Refers to center of the output shaft or flange
[d)] Please reduce input speed at higher ambient temperatures

View A

Motor shaft diameter [mm]

1-stage

up to 28 [4] (H) [6] clamping hub diameter

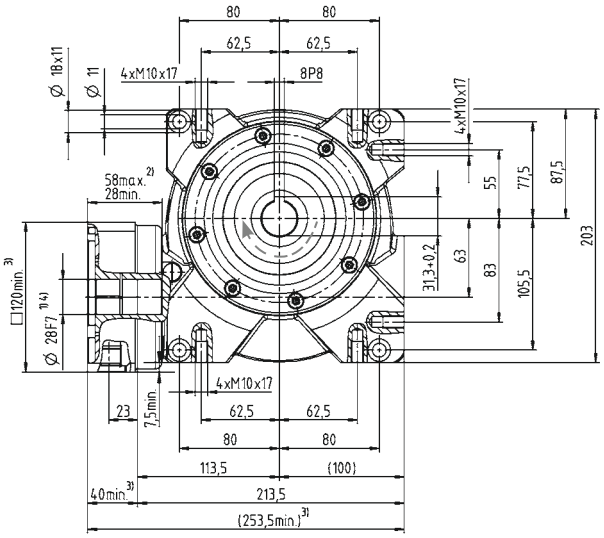

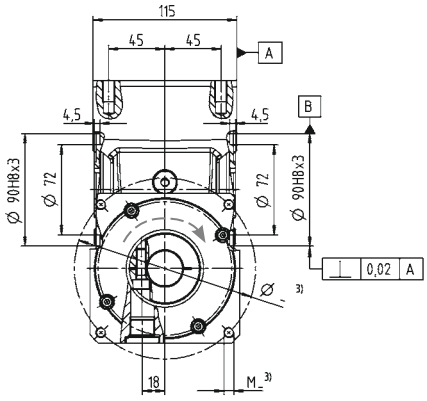

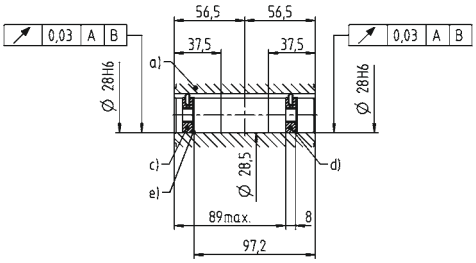

2-stage

up to 19/24 [4] (E [6]/G) clamping hub diameter

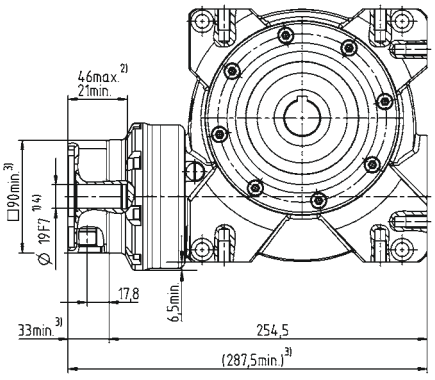

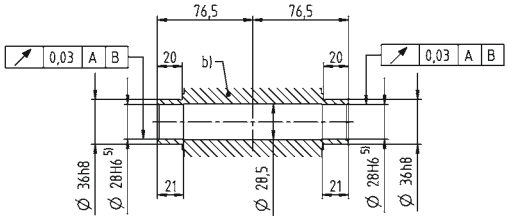

a) Hollow shaft, keywayed
b) Hollow shaft, smooth
c) End disc for screw M10
d) End disc as forcing washer for screw M12
e) Locking ring – DIN 472

See technical data sheet for available clamping hub diameters (mass moment of inertia). Dimensions available on request.

Non-tolerated dimensions are nominal dimensions
[1] Check motor shaft fit.
[2] Min./Max. permissible motor shaft length. Longer motor shafts are adaptable, please contact us.
[3] The dimensions depend on the motor.
[4] Smaller motor shaft diameter is compensated by a bushing with a minimum thickness of 1 mm.
[5] Tolerance h6 for mounted shaft.
[6] Standard clamping hub diameter

VH+ 080 MF 1-/2-stage

			1-stage						2-stage						
Ratio	*i*		**4**	**7**	**10**	**16**	**28**	**40**	**50**	**70**	**100**	**140**	**200**	**280**	**400**
Max. torque [a) b)] (at n_1 = 500 rpm)	T_{2a}	*Nm*	578	646	672	702	785	676	672	646	672	785	676	785	676
		in.lb	5115	5717	5947	6213	6947	5983	5947	5717	5947	6947	5983	6947	5983
Torque for constant backlash (over the lifetime)	T_{2Servo}	*Nm*	469	601	613	677	764	631	613	601	613	764	631	764	631
		in.lb	4151	5319	5425	5991	6761	5584	5425	5319	5425	6761	5584	6761	5584
Emergency stop torque [a) b)] (permitted 1000 times during the service life of the gearbox)	T_{2Not}	*Nm*	938	993	963	1005	1064	941	963	993	963	1064	941	1064	941
		in.lb	8301	8788	8523	8894	9416	8328	8523	8788	8523	9416	8328	9416	8328
Permitted average input speed (at 20 °C ambient temperature) [d)]	n_{1N}	*rpm*	3500						2900						
Max. input speed	n_{1Max}	*rpm*	4000						4500						
Mean no load running torque [b)] (at n_1 = 3000 rpm and 20 °C gearbox temperature)	T_{012}	*Nm*	7.2	7.1	6.5	5	4.8	4.5	2.8	1.6	1.5	2.4	2.4	1.8	1.3
		in.lb	63.7	62.8	57.5	44.3	42.5	39.8	24.8	14.2	13.3	21.2	21.2	15.9	11.5
Max. backlash	j_t	*arcmin*	Standard ≤ 3 / Reduced ≤ 2						Standard ≤ 4 / Reduced ≤ 3						
Torsional rigidity [b)]	C_{t21}	*Nm/arcmin*	78												
		in.lb/arcmin	690												
Max. axial force [c)]	F_{2AMax}	*N*	13900												
		lb_f	3128												
Max. lateral force [c)]	F_{2QMax}	*N*	9000												
		lb_f	2025												
Max. tilting moment	M_{2KMax}	*Nm*	1544												
		in.lb	13664												
Efficiency at full load (at n_1 = 500 rpm)	η	%	94	92	89	86	77	70	87	90	87	75	68	75	68
Service life	L_h	*h*	> 20000												
Weight (incl. standard adapter plate)	*m*	*kg*	27.0						29.5						
		lb_m	59.7						68.0						
Operating noise (at reference ratio and reference speed – ratio-specific values available in cymex®)	L_{PA}	*dB(A)*	≤ 66						≤ 68						
Max. permitted housing temperature		*°C*	+90												
		F	194												
Ambient temperature		*°C*	-15 to +40												
		F	5 to 104												
Lubrication			Lubricated for life												
Direction of rotation			In- and output same direction												
Protection class			IP 65												
Shrink disc (Standard version)			SD 050x090 S2V												
Max. torque (without axial force)	T_{max}	*Nm*	1400												
Mass moment of inertia (relates to the drive) G 24	J_1	*kgcm²*	-	-	-	-	-	-	10.40	10.10	10.10	8.80	9.50	9.40	9.30
		10^{-3} *in.lb.s²*	-	-	-	-	-	-	9.20	8.94	8.94	7.79	8.41	8.32	8.23
Clamping hub diameter [mm] K 38	J_1	*kgcm²*	20.30	16.75	16.79	15.37	15.26	15.90	17.30	17.00	17.10	15.80	16.40	16.30	16.20
		10^{-3} *in.lb.s²*	17.97	14.82	14.86	13.60	13.51	14.07	15.31	15.05	15.13	13.98	14.51	14.43	14.34

Please use our sizing software cymex® for a detailed sizing – **www.wittenstein-cymex.com**
Please contact us for optimum sizing at S1 conditions (Continuous operation).

[a)] At max. 10 % F_{2QMax}
[b)] Valid for standard clamping hub diameter
[c)] Refers to center of the output shaft or flange
[d)] Please reduce input speed at higher ambient temperatures

View A

Motor shaft diameter [mm]

1-stage

up to 38 [4] (K) [6] clamping hub diameter

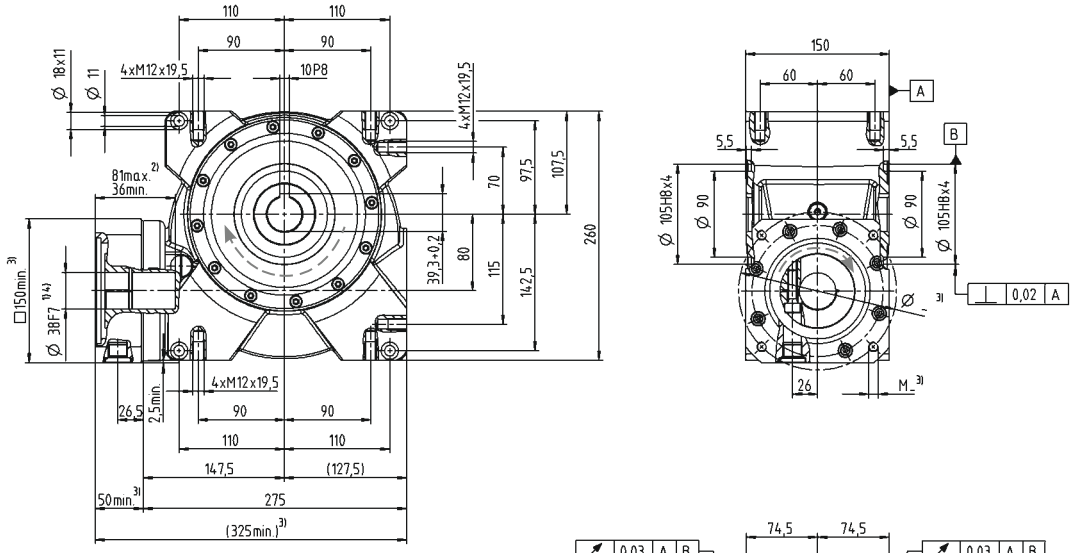

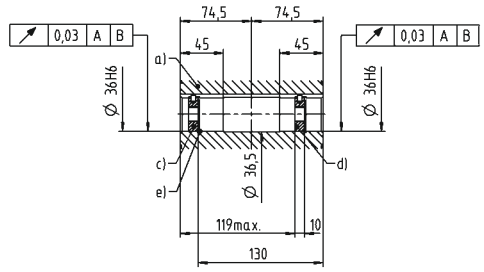

2-stage

up to 24/38 [4] (G [6]/K) clamping hub diameter

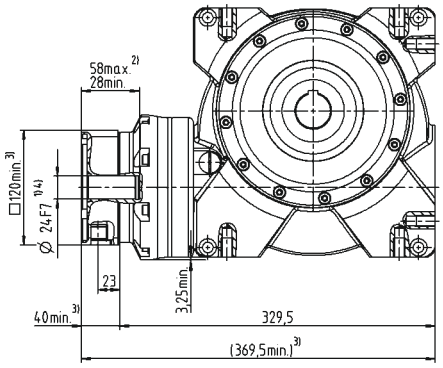

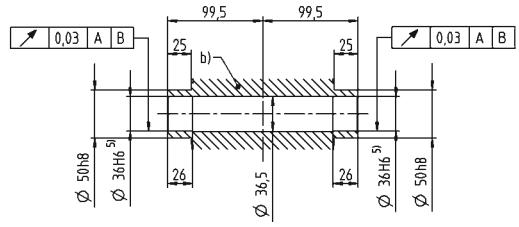

a) Hollow shaft, keywayed
b) Hollow shaft, smooth
c) End disc for screw M12
d) End disc as forcing washer for screw M16
e) Locking ring – DIN 472

See technical data sheet for available clamping hub diameters (mass moment of inertia). Dimensions available on request.

Non-tolerated dimensions are nominal dimensions
1) Check motor shaft fit.
2) Min. / Max. permissible motor shaft length. Longer motor shafts are adaptable, please contact us.
3) The dimensions depend on the motor.
4) Smaller motor shaft diameter is compensated by a bushing with a minimum thickness of 1 mm.
5) Tolerance h6 for mounted shaft.
6) Standard clamping hub diameter

VH+ 100 MF 1-/2-stage

			1-stage						2-stage						
Ratio	*i*		**4**	**7**	**10**	**16**	**28**	**40**	**50**	**70**	**100**	**140**	**200**	**280**	**400**
Max. torque [a) b)] (at n_1 = 500 rpm)	T_{2a}	*Nm*	1184	1336	1377	1392	1505	1376	1377	1377	1377	1505	1376	1505	1376
		in.lb	10478	11824	12186	12319	13319	12178	12186	12186	12186	13319	12178	13319	12178
Torque for constant backlash (over the lifetime)	T_{2Servo}	*Nm*	1155	1304	1343	1359	1469	1343	1343	1343	1343	1469	1343	1469	1343
		in.lb	10222	11540	11886	12027	13001	11886	11886	11886	11886	13001	11886	13001	11886
Emergency stop torque [a) b)] (permitted 1000 times during the service life of the gearbox)	T_{2Not}	*Nm*	1819	1932	1940	1955	2073	1856	1940	1940	1940	2073	1856	2073	1856
		in.lb	16098	17098	17169	17302	18346	16426	17169	17169	17169	18346	16426	18346	16426
Permitted average input speed (at 20 °C ambient temperature) [d)]	n_{1N}	*rpm*	3000						2700						
Max. input speed	n_{1Max}	*rpm*	3500						4000						
Mean no load running torque [b)] (at n_1 = 3000 rpm and 20 °C gearbox temperature)	T_{012}	*Nm*	12.2	10.5	9.8	9.1	8.2	7.2	4.1	2.3	2.2	3.8	3.6	2.6	2
		in.lb	108.0	92.9	86.7	80.5	72.6	63.7	36.3	20.4	19.5	33.6	31.9	23.0	17.7
Max. backlash	j_t	*arcmin*	Standard ≤ 3 / Reduced ≤ 2						Standard ≤ 4 / Reduced ≤ 3						
Torsional rigidity [b)]	C_{t21}	*Nm/arcmin*	153												
		in.lb/arcmin	1354												
Max. axial force [c)]	F_{2AMax}	*N*	19500												
		lb_f	4388												
Max. lateral force [c)]	F_{2QMax}	*N*	14000												
		lb_f	3150												
Max. tilting moment	M_{2KMax}	*Nm*	3059												
		in.lb	27072												
Efficiency at full load (at n_1 = 500 rpm)	η	%	95	93	91	87	80	76	89	89	89	78	74	78	74
Service life	L_h	*h*	> 20000												
Weight (incl. standard adapter plate)	*m*	*kg*	51.0						53.6						
		lb_m	112.7						118.0						
Operating noise (at reference ratio and reference speed – ratio-specific values available in cymex®)	L_{PA}	*dB(A)*	≤ 70												
Max. permitted housing temperature		*°C*	+90												
		F	194												
Ambient temperature		*°C*	-15 to +40												
		F	5 to 104												
Lubrication			Lubricated for life												
Direction of rotation			In- and output same direction												
Protection class			IP 65												
Shrink disc (Standard version)			SD 062x110 S2V												
Max. torque (without axial force)	T_{max}	*Nm*	2300												
Mass moment of inertia (relates to the drive) — Clamping hub diameter [mm]: K 38	J_1	*kgcm²*	-	-	-	-	-	-	31.70	33.00	31.10	30.10	30.40	30.00	29.80
		10^{-3} *in.lb.s²*	-	-	-	-	-	-	28.05	29.21	27.52	26.64	26.90	26.55	26.37
Mass moment of inertia (relates to the drive) — Clamping hub diameter [mm]: M 48	J_1	*kgcm²*	50.25	40.70	38.77	39.62	37.15	37.47	46.40	47.70	45.80	44.80	45.10	44.70	44.50
		10^{-3} *in.lb.s²*	44.47	36.02	34.31	35.06	32.88	33.16	41.06	42.21	40.53	39.65	39.91	39.56	39.38

Please use our sizing software cymex® for a detailed sizing – **www.wittenstein-cymex.com**
Please contact us for optimum sizing at S1 conditions (Continuous operation).

a) At max. 10 % F_{2QMax}
b) Valid for standard clamping hub diameter
c) Refers to center of the output shaft or flange
d) Please reduce input speed at higher ambient temperatures

View A

Motor shaft diameter [mm]

1-stage

up to 48 [4] (M)[6] clamping hub diameter

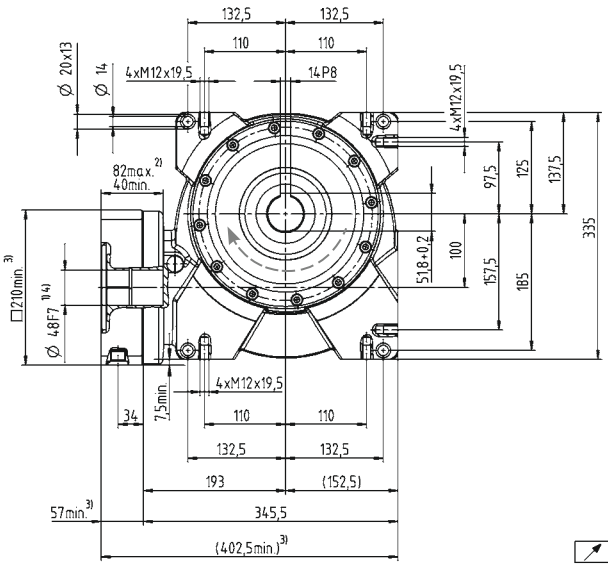

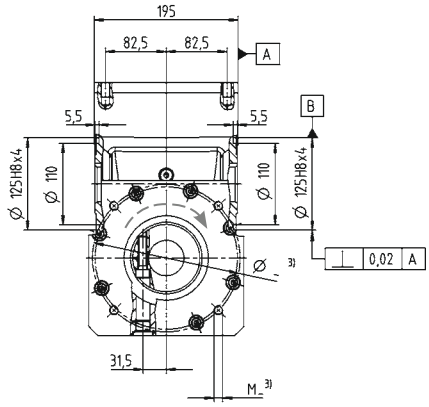

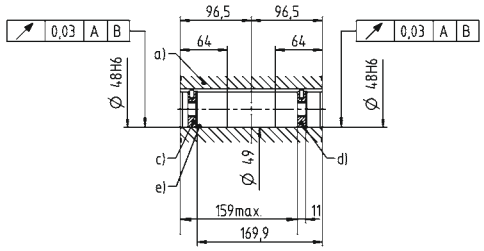

2-stage

up to 38/48 [4] (K[6]/M) clamping hub diameter

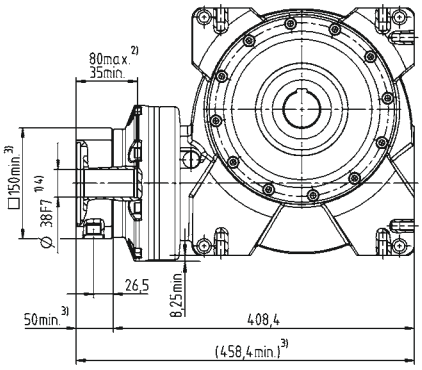

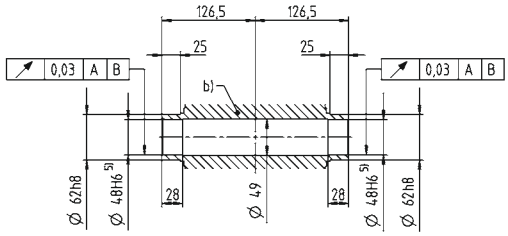

a) Hollow shaft, keywayed
b) Hollow shaft, smooth
c) End disc for screw M16
d) End disc as forcing washer for screw M20
e) Locking ring – DIN 472

See technical data sheet for available clamping hub diameters (mass moment of inertia). Dimensions available on request.

Non-tolerated dimensions are nominal dimensions
1) Check motor shaft fit.
2) Min./Max. permissible motor shaft length. Longer motor shafts are adaptable, please contact us.
3) The dimensions depend on the motor.
4) Smaller motor shaft diameter is compensated by a bushing with a minimum thickness of 1 mm.
5) Tolerance h6 for mounted shaft.
6) Standard clamping hub diameter

VS+ 050 MF 1-/2-stage

			1-stage						2-stage						
Ratio	*i*		**4**	**7**	**10**	**16**	**28**	**40**	**50**	**70**	**100**	**140**	**200**	**280**	**400**
Max. torque [a) b) e)] (at n_1 = 500 rpm)	T_{2a}	*Nm*	165	180	182	193	204	183	182	180	182	204	183	204	183
		in.lb	1460	1593	1611	1708	1805	1620	1611	1593	1611	1805	1620	1805	1620
Torque for constant backlash (over the lifetime)	T_{2Servo}	*Nm*	54	71	74	81	90	74	74	71	74	90	74	90	74
		in.lb	478	628	655	717	797	655	655	628	655	797	655	797	655
Emergency stop torque [a) b) e)] (permitted 1000 times during the service life of the gearbox)	T_{2Not}	*Nm*	230	242	242	250	262	236	242	242	242	262	236	262	236
		in.lb	2036	2142	2142	2213	2319	2089	2142	2142	2142	2319	2089	2319	2089
Permitted average input speed (at 20 °C ambient temperature) [d)]	n_{1N}	*rpm*	4000						3500						
Max. input speed	n_{1Max}	*rpm*	6000												
Mean no load running torque [b)] (at n_1 = 3000 rpm and 20 °C gearbox temperature)	T_{012}	*Nm*	2.3	2.2	1.6	1.5	1.2	1.1	0.7	0.5	0.4	0.6	0.6	0.4	0.4
		in.lb	20.4	19.5	14.2	13.3	10.6	9.7	6.2	4.4	3.5	5.3	5.3	3.5	3.5
Max. backlash	j_t	*arcmin*	Standard ≤ 3 / Reduced ≤ 2						Standard ≤ 4 / Reduced ≤ 3						
Torsional rigidity [b)]	C_{t21}	*Nm/arcmin*	8												
		in.lb/arcmin	71												
Max. axial force [c)]	F_{2AMax}	*N*	5000												
		lb_f	1125												
Max. lateral force [c)]	F_{2QMax}	*N*	3800												
		lb_f	855												
Max. tilting moment	M_{2KMax}	*Nm*	409												
		in.lb	3620												
Efficiency at full load (at n_1 = 500 rpm)	η	%	92	89	86	82	72	64	84	87	84	70	62	70	62
Service life	L_h	*h*	> 20000												
Weight (incl. standard adapter plate)	*m*	*kg*	9.0						9.7						
		lb_m	19.9						21.0						
Operating noise (at reference ratio and reference speed – ratio-specific values available in cymex®)	L_{PA}	*dB(A)*	≤ 62												
Max. permitted housing temperature		*°C*	+90												
		F	194												
Ambient temperature		*°C*	-15 to +40												
		F	5 to 104												
Lubrication			Lubricated for life												
Direction of rotation			In- and output same direction												
Protection class			IP 65												
Metal bellows coupling (recommended product type – validate sizing with cymex®)			BC3 - 00200A - 022.000 - X												
Bore diameter of coupling on the application side		*mm*	X = 015.000 - 044.000												
Mass moment of inertia (relates to the drive) Clamping hub diameter [mm] — C 14	J_1	*kgcm²*	-	-	-	-	-	-	0.80	0.80	0.80	0.70	0.70	0.70	0.70
		10^{-3} *in.lb.s²*	-	-	-	-	-	-	0.71	0.71	0.71	0.62	0.62	0.62	0.62
E 19	J_1	*kgcm²*	1.50	1.21	1.12	1.03	1.00	1.05	1.20	1.30	1.20	1.10	1.10	1.10	1.10
		10^{-3} *in.lb.s²*	1.33	1.07	0.99	0.91	0.89	0.93	1.06	1.15	1.06	0.97	0.97	0.97	0.97

Please use our sizing software cymex® for a detailed sizing – **www.wittenstein-cymex.com**
Please contact us for optimum sizing at S1 conditions (Continuous operation).

a) At max. 10 % F_{2QMax}
b) Valid for standard clamping hub diameter
c) Refers to center of the output shaft or flange
d) Please reduce input speed at higher ambient temperatures
e) Smooth shaft

View A

Motor shaft diameter [mm]

1-stage

up to 19 [4] (E) [6] clamping hub diameter

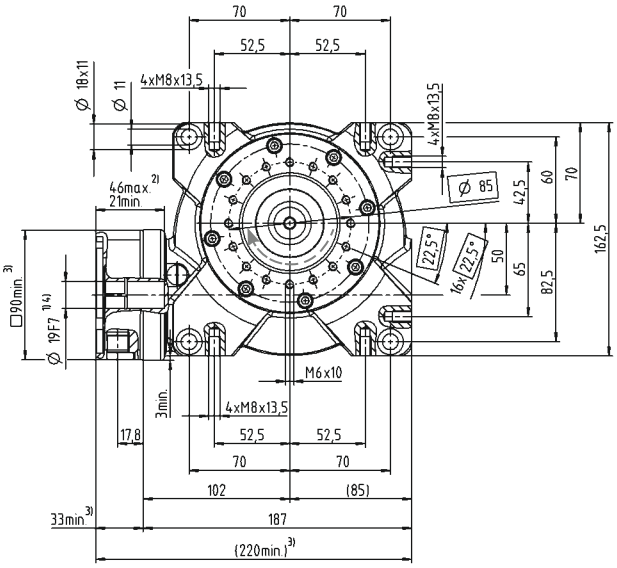

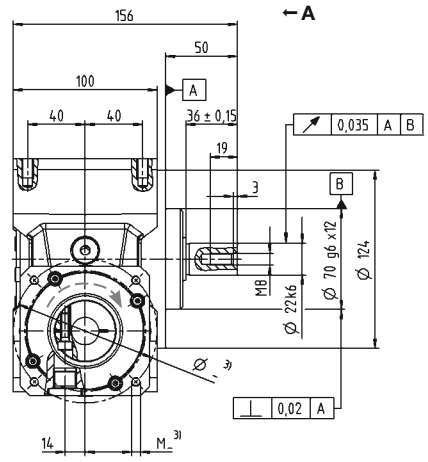

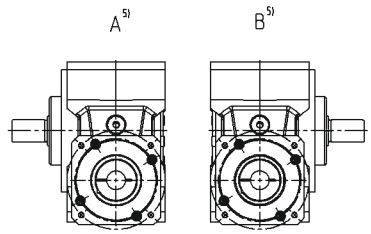

2-stage

up to 14/19 [4] (C [6]/E) clamping hub diameter

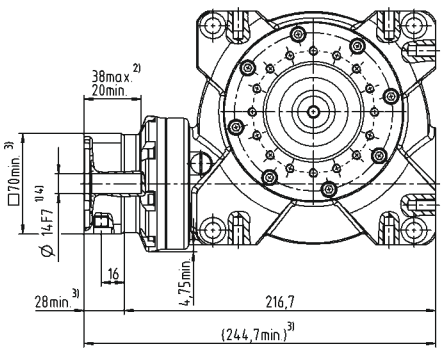

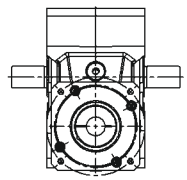

Optional dual-shaft output. Drawings available upon request.
Involute gearing is not possible.

Other output variants

Shaft with key

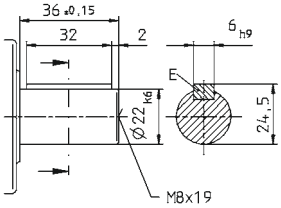

Splined shaft (DIN 5480)

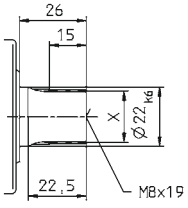

See technical data sheet for available clamping hub diameters (mass moment of inertia). Dimensions available on request.

Non-tolerated dimensions are nominal dimensions
1) Check motor shaft fit.
2) Min./Max. permissible motor shaft length. Longer motor shafts are adaptable, please contact us.
3) The dimensions depend on the motor.
4) Smaller motor shaft diameter is compensated by a bushing with a minimum thickness of 1 mm.
5) Output side
6) Standard clamping hub diameter

VS+ 063 MF 1-/2-stage

			1-stage						2-stage						
Ratio	*i*		**4**	**7**	**10**	**16**	**28**	**40**	**50**	**70**	**100**	**140**	**200**	**280**	**400**
Max. torque [a) b) e)] (at n_1 = 500 rpm)	T_{2a}	*Nm*	319	353	364	372	392	363	364	353	364	392	363	392	363
		in.lb	2823	3124	3221	3292	3469	3213	3221	3124	3221	3469	3213	3469	3213
Torque for constant backlash (over the lifetime)	T_{2Servo}	*Nm*	198	210	225	221	229	226	225	210	225	229	226	229	226
		in.lb	1752	1859	1991	1956	2027	2000	1991	1859	1991	2027	2000	2027	2000
Emergency stop torque [a) b) e)] (permitted 1000 times during the service life of the gearbox)	T_{2Not}	*Nm*	460	484	491	494	518	447	491	484	494	518	447	518	447
		in.lb	4071	4283	4345	4372	4584	3956	4345	4283	4372	4584	3956	4584	3956
Permitted average input speed (at 20 °C ambient temperature) [d)]	n_{1N}	*rpm*	4000						3100						
Max. input speed	n_{1Max}	*rpm*	4500												
Mean no load running torque [b)] (at n_1 = 3000 rpm and 20 °C gearbox temperature)	T_{012}	*Nm*	4.2	3.1	3	2.4	2.3	2.2	1.2	0.7	0.7	1.1	1.1	0.8	0.6
		in.lb	37.2	27.4	26.6	21.2	20.4	19.5	10.6	6.2	6.2	9.7	9.7	7.1	5.3
Max. backlash	j_t	*arcmin*	Standard ≤ 3 / Reduced ≤ 2						Standard ≤ 4 / Reduced ≤ 3						
Torsional rigidity [b)]	C_{t21}	*Nm/arcmin*	28												
		in.lb/arcmin	248												
Max. axial force [c)]	F_{2AMax}	*N*	8250												
		lb_f	1856												
Max. lateral force [c)]	F_{2QMax}	*N*	6000												
		lb_f	1350												
Max. tilting moment	M_{2KMax}	*Nm*	843												
		in.lb	7461												
Efficiency at full load (at n_1 = 500 rpm)	η	%	93	91	88	83	74	68	86	89	86	72	66	72	66
Service life	L_h	*h*	> 20000												
Weight (incl. standard adapter plate)	*m*	*kg*	16.0						16.7						
		lb_m	35.4						37.0						
Operating noise (at reference ratio and reference speed – ratio-specific values available in cymex®)	L_{PA}	*dB(A)*	≤ 64												
Max. permitted housing temperature		*°C*	+90												
		F	194												
Ambient temperature		*°C*	-15 to +40												
		F	5 to 104												
Lubrication			Lubricated for life												
Direction of rotation			In- and output same direction												
Protection class			IP 65												
Metal bellows coupling (recommended product type – validate sizing with cymex®)			BC3 - 00500A - 032.000 - X												
Bore diameter of coupling on the application side		*mm*	X = 024.000 - 056.000												
Mass moment of inertia (relates to the drive) Clamping hub diameter [mm] — E 19	J_1	*kgcm²*	-	-	-	-	-	-	2.60	2.80	2.50	2.40	2.40	2.40	2.30
		10^{-3} *in.lb.s²*	-	-	-	-	-	-	2.30	2.48	2.21	2.12	2.12	2.12	2.04
G 24	J_1	*kgcm²*	-	-	-	-	-	-	4.10	4.30	4.10	4.00	4.00	3.90	3.90
		10^{-3} *in.lb.s²*	-	-	-	-	-	-	3.63	3.81	3.63	3.54	3.54	3.45	3.45
H 28	J_1	*kgcm²*	4.80	3.89	3.65	3.56	3.52	3.47	-	-	-	-	-	-	-
		10^{-3} *in.lb.s²*	4.25	3.44	3.23	3.15	3.12	3.07	-	-	-	-	-	-	-

Please use our sizing software cymex® for a detailed sizing – **www.wittenstein-cymex.com**
Please contact us for optimum sizing at S1 conditions (Continuous operation).

[a)] At max. 10 % F_{2QMax}
[b)] Valid for standard clamping hub diameter
[c)] Refers to center of the output shaft or flange
[d)] Please reduce input speed at higher ambient temperatures
[e)] Smooth shaft

View A

Motor shaft diameter [mm]

1-stage

up to 28 [4] (H) [6] clamping hub diameter

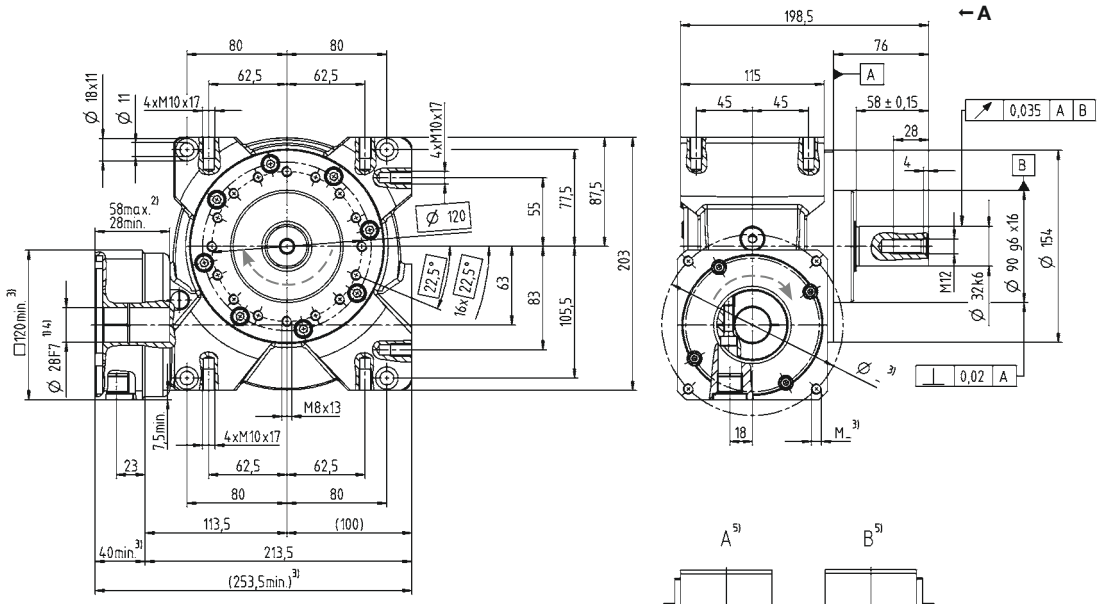

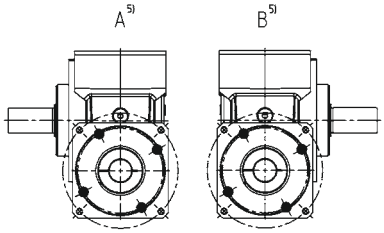

2-stage

up to 19/24 [4] (E [6]/G) clamping hub diameter

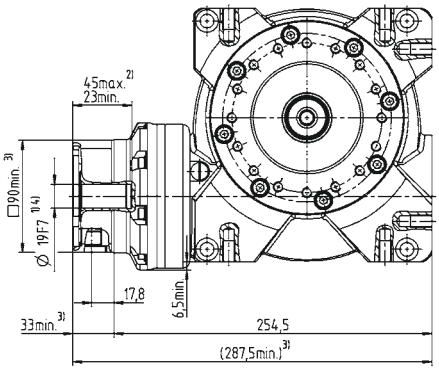

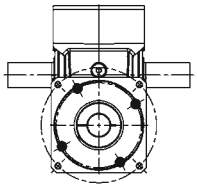

Optional dual-shaft output. Drawings available upon request.
Involute gearing is not possible.

Worm gearboxes

VS+

Other output variants

Shaft with key

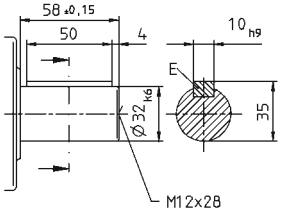

Splined shaft (DIN 5480)

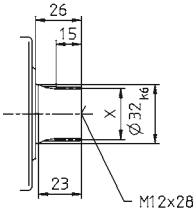

See technical data sheet for available clamping hub diameters (mass moment of inertia). Dimensions available on request.

Non-tolerated dimensions are nominal dimensions

1) Check motor shaft fit.
2) Min./Max. permissible motor shaft length. Longer motor shafts are adaptable, please contact us.
3) The dimensions depend on the motor.
4) Smaller motor shaft diameter is compensated by a bushing with a minimum thickness of 1 mm.
5) Output side
6) Standard clamping hub diameter

VS+ 080 MF 1-/2-stage

			1-stage						2-stage						
Ratio	*i*		**4**	**7**	**10**	**16**	**28**	**40**	**50**	**70**	**100**	**140**	**200**	**280**	**400**
Max. torque [a) b) e)] (at n_1 = 500 rpm)	T_{2a}	*Nm*	578	646	672	702	785	676	672	646	672	785	676	785	676
		in.lb	5115	5717	5947	6213	6947	5983	5947	5717	5947	6947	5983	6947	5983
Torque for constant backlash (over the lifetime)	T_{2Servo}	*Nm*	469	601	613	677	764	631	613	601	613	764	631	764	631
		in.lb	4151	5319	5425	5991	6761	5584	5425	5319	5425	6761	5584	6761	5584
Emergency stop torque [a) b) e)] (permitted 1000 times during the service life of the gearbox)	T_{2Not}	*Nm*	938	993	963	1005	1064	941	963	993	963	1064	941	1064	941
		in.lb	8301	8788	8523	8894	9416	8328	8523	8788	8523	9416	8328	9416	8328
Permitted average input speed (at 20 °C ambient temperature) [d)]	n_{1N}	*rpm*	3500						2900						
Max. input speed	n_{1Max}	*rpm*	4000						4500						
Mean no load running torque [b)] (at n_1 = 3000 rpm and 20 °C gearbox temperature)	T_{012}	*Nm*	7.2	7.1	6.5	5	4.8	4.5	2.8	1.6	1.5	2.4	2.4	1.8	1.3
		in.lb	63.7	62.8	57.5	44.3	42.5	39.8	24.8	14.2	13.3	21.2	21.2	15.9	11.5
Max. backlash	j_t	*arcmin*	Standard ≤ 3 / Reduced ≤ 2						Standard ≤ 4 / Reduced ≤ 3						
Torsional rigidity [b)]	C_{t21}	*Nm/arcmin*	78												
		in.lb/arcmin	690												
Max. axial force [c)]	F_{2AMax}	*N*	13900												
		lb_f	3128												
Max. lateral force [c)]	F_{2QMax}	*N*	9000												
		lb_f	2025												
Max. tilting moment	M_{2KMax}	*Nm*	1544												
		in.lb	13664												
Efficiency at full load (at n_1 = 500 rpm)	η	%	94	92	89	86	77	70	87	90	87	75	68	75	68
Service life	L_h	*h*	> 20000												
Weight (incl. standard adapter plate)	*m*	*kg*	33.0						35.5						
		lb_m	72.9						78.0						
Operating noise (at reference ratio and reference speed – ratio-specific values available in cymex®)	L_{PA}	*dB(A)*	≤ 66						≤ 68						
Max. permitted housing temperature		*°C*	+90												
		F	194												
Ambient temperature		*°C*	-15 to +40												
		F	5 to 104												
Lubrication			Lubricated for life												
Direction of rotation			In- and output same direction												
Protection class			IP 65												
Metal bellows coupling (recommended product type – validate sizing with cymex®)			BC3 - 00800A - 040.000 - X												
Bore diameter of coupling on the application side		*mm*	X = 030.000 - 060.000												
Mass moment of inertia (relates to the drive) G 24	J_1	*kgcm²*	-	-	-	-	-	-	10.40	10.10	10.10	8.80	9.50	9.40	9.30
		10^{-3} *in.lb.s²*	-	-	-	-	-	-	9.20	8.94	8.94	7.79	8.41	8.32	8.23
Clamping hub diameter [mm] K 38	J_1	*kgcm²*	20.30	16.56	16.69	15.33	15.24	15.90	17.30	17.00	17.10	15.80	16.40	16.30	16.20
		10^{-3} *in.lb.s²*	17.97	14.66	14.77	13.57	13.49	14.07	15.31	15.05	15.13	13.98	14.51	14.43	14.34

Please use our sizing software cymex® for a detailed sizing – **www.wittenstein-cymex.com**
Please contact us for optimum sizing at S1 conditions (Continuous operation).

[a)] At max. 10 % F_{2QMax}
[b)] Valid for standard clamping hub diameter
[c)] Refers to center of the output shaft or flange
[d)] Please reduce input speed at higher ambient temperatures
[e)] Smooth shaft

View A

Motor shaft diameter [mm]

1-stage

up to 38 [4] (K) [6] clamping hub diameter

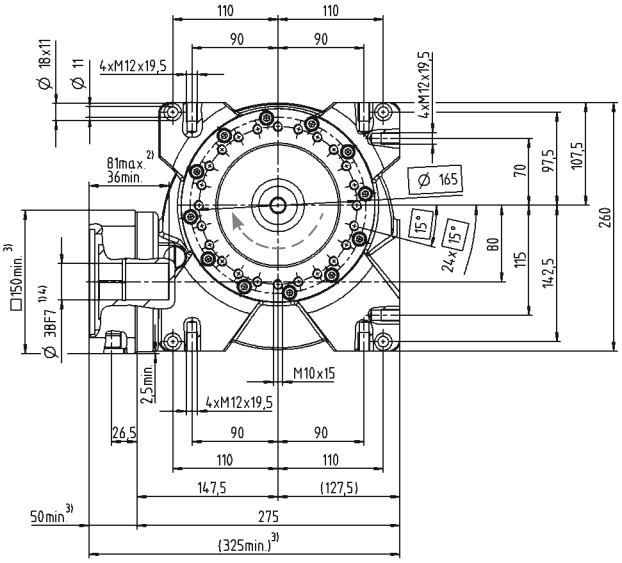

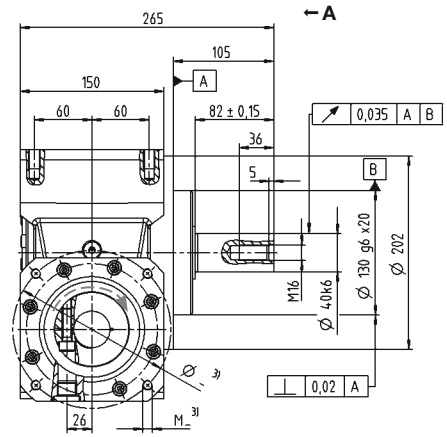

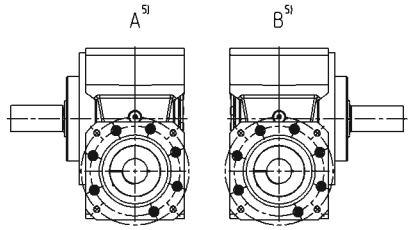

2-stage

up to 24/38 [4] (G [6]/K) clamping hub diameter

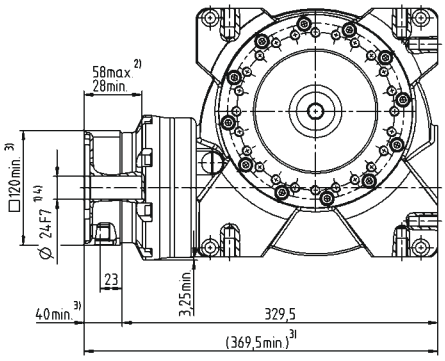

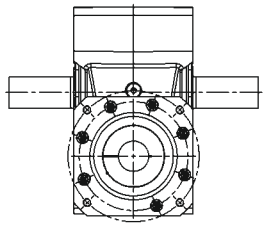

Optional dual-shaft output. Drawings available upon request.
Involute gearing is not possible.

Worm gearboxes

VS+

Other output variants

Shaft with key

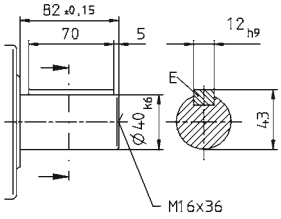

Splined shaft (DIN 5480)

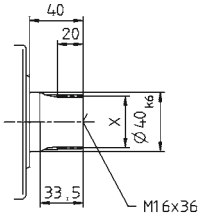

See technical data sheet for available clamping hub diameters (mass moment of inertia). Dimensions available on request.

Non-tolerated dimensions are nominal dimensions
1) Check motor shaft fit.
2) Min./Max. permissible motor shaft length. Longer motor shafts are adaptable, please contact us.
3) The dimensions depend on the motor.
4) Smaller motor shaft diameter is compensated by a bushing with a minimum thickness of 1 mm.
5) Output side
6) Standard clamping hub diameter

VS+ 100 MF 1-/2-stage

				1-stage						2-stage						
Ratio			*i*	**4**	**7**	**10**	**16**	**28**	**40**	**50**	**70**	**100**	**140**	**200**	**280**	**400**
Max. torque [a) b) e)] (at n_1 = 500 rpm)			T_{2a} *Nm*	1184	1336	1377	1392	1505	1376	1377	1377	1377	1505	1376	1505	1376
			T_{2a} *in.lb*	10478	11824	12186	12319	13319	12178	12186	12186	12186	13319	12178	13319	12178
Torque for constant backlash (over the lifetime)			T_{2Servo} *Nm*	1155	1304	1343	1359	1469	1343	1343	1343	1343	1469	1343	1469	1343
			T_{2Servo} *in.lb*	10222	11540	11886	12027	13001	11886	11886	11886	11886	13001	11886	13001	11886
Emergency stop torque [a) b) e)] (permitted 1000 times during the service life of the gearbox)			T_{2Not} *Nm*	1819	1932	1940	1955	2073	1856	1940	1940	1940	2073	1856	2073	1856
			T_{2Not} *in.lb*	16098	17098	17169	17302	18346	16426	17169	17169	17169	18346	16426	18346	16426
Permitted average input speed (at 20 °C ambient temperature) [d)]			n_{1N} *rpm*	3000						2700						
Max. input speed			n_{1Max} *rpm*	3500						4000						
Mean no load running torque [b)] (at n_1 = 3000 rpm and 20 °C gearbox temperature)			T_{012} *Nm*	12.2	10.5	9.8	9.1	8.2	7.2	4.1	2.3	2.2	3.8	3.6	2.6	2
			T_{012} *in.lb*	108.0	92.9	86.7	80.5	72.6	63.7	36.3	20.4	19.5	33.6	31.9	23.0	17.7
Max. backlash			j_t *arcmin*	Standard ≤ 3 / Reduced ≤ 2						Standard ≤ 4 / Reduced ≤ 3						
Torsional rigidity [b)]			C_{t21} *Nm/arcmin*	153												
			C_{t21} *in.lb/arcmin*	1354												
Max. axial force [c)]			F_{2AMax} *N*	19500												
			F_{2AMax} lb_f	4388												
Max. lateral force [c)]			F_{2QMax} *N*	14000												
			F_{2QMax} lb_f	3150												
Max. tilting moment			M_{2KMax} *Nm*	3059												
			M_{2KMax} *in.lb*	27072												
Efficiency at full load (at n_1 = 500 rpm)			η %	95	93	91	87	80	76	89	89	89	78	74	78	74
Service life			L_h *h*	> 20000												
Weight (incl. standard adapter plate)			*m* *kg*	62.0						64.6						
			m lb_m	137.0						143.0						
Operating noise (at reference ratio and reference speed – ratio-specific values available in cymex®)			L_{PA} *dB(A)*	≤ 70												
Max. permitted housing temperature			*°C*	+90												
			F	194												
Ambient temperature			*°C*	-15 to +40												
			F	5 to 104												
Lubrication				Lubricated for life												
Direction of rotation				In- and output same direction												
Protection class				IP 65												
Metal bellows coupling (recommended product type – validate sizing with cymex®)				BC3 - 01500A - 055.000 - X												
Bore diameter of coupling on the application side			*mm*	X = 035.000 - 070.000												
Mass moment of inertia (relates to the drive) Clamping hub diameter [mm]	K	38	J_1 *kgcm²*	-	-	-	-	-	-	31.70	33.00	31.10	30.10	30.40	30.00	29.80
			J_1 10^{-3} *in.lb.s²*	-	-	-	-	-	-	28.05	29.21	27.52	26.64	26.90	26.55	26.37
	M	48	J_1 *kgcm²*	50.02	40.63	38.73	39.60	37.14	37.47	46.40	47.70	45.80	44.80	45.10	44.70	44.50
			J_1 10^{-3} *in.lb.s²*	44.27	35.96	34.28	35.05	32.87	33.16	41.06	42.21	40.53	39.65	39.91	39.56	39.38

Please use our sizing software cymex® for a detailed sizing – **www.wittenstein-cymex.com**
Please contact us for optimum sizing at S1 conditions (Continuous operation).

a) At max. 10 % F_{2QMax}
b) Valid for standard clamping hub diameter
c) Refers to center of the output shaft or flange
d) Please reduce input speed at higher ambient temperatures
e) Smooth shaft

View A

Motor shaft diameter [mm]

1-stage

up to 48 [4] (M) [6] clamping hub diameter

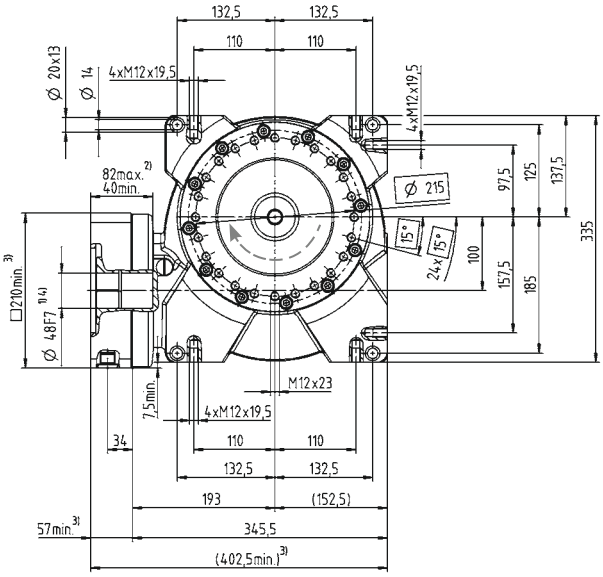

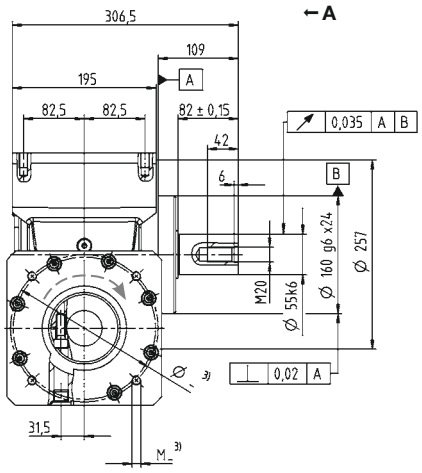

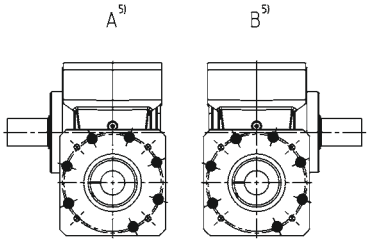

2-stage

up to 38/48 [4] (K [6]/M) clamping hub diameter

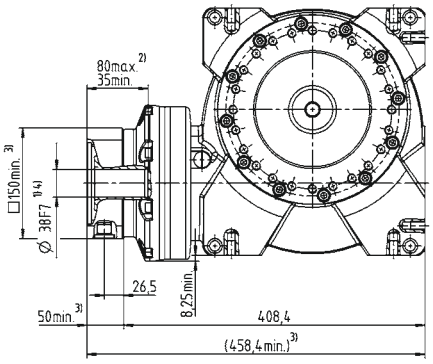

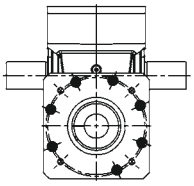

Optional dual-shaft output. Drawings available upon request.
Involute gearing is not possible.

Other output variants

Shaft with key

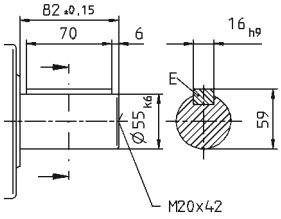

Splined shaft (DIN 5480)

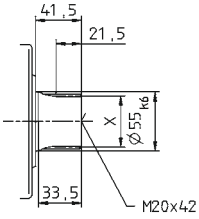

See technical data sheet for available clamping hub diameters (mass moment of inertia). Dimensions available on request.

Non-tolerated dimensions are nominal dimensions
1) Check motor shaft fit.
2) Min./Max. permissible motor shaft length. Longer motor shafts are adaptable, please contact us.
3) The dimensions depend on the motor.
4) Smaller motor shaft diameter is compensated by a bushing with a minimum thickness of 1 mm.
5) Output side
6) Standard clamping hub diameter

VT+ 050 MF 1-/2-stage

			1-stage						2-stage						
Ratio	*i*		**4**	**7**	**10**	**16**	**28**	**40**	**50**	**70**	**100**	**140**	**200**	**280**	**400**
Max. torque [a) b)] (at n_1 = 500 rpm)	T_{2a}	*Nm*	165	180	182	193	204	183	182	180	182	204	183	204	183
		in.lb	1460	1593	1611	1708	1805	1620	1611	1593	1611	1805	1620	1805	1620
Torque for constant backlash (over the lifetime)	T_{2Servo}	*Nm*	54	71	74	81	90	74	74	71	74	90	74	90	74
		in.lb	478	628	655	717	797	655	655	628	655	797	655	797	655
Emergency stop torque [a) b)] (permitted 1000 times during the service life of the gearbox)	T_{2Not}	*Nm*	230	242	242	250	262	236	242	242	242	262	236	262	236
		in.lb	2036	2142	2142	2213	2319	2089	2142	2142	2142	2319	2089	2319	2089
Permitted average input speed (at 20 °C ambient temperature) [d)]	n_{1N}	*rpm*	4000						3500						
Max. input speed	n_{1Max}	*rpm*	6000												
Mean no load running torque [b)] (at n_1 = 3000 rpm and 20 °C gearbox temperature)	T_{012}	*Nm*	2.3	2.2	1.6	1.5	1.2	1.1	0.7	0.5	0.4	0.6	0.6	0.4	0.4
		in.lb	20.4	19.5	14.2	13.3	10.6	9.7	6.2	4.4	3.5	5.3	5.3	3.5	3.5
Max. backlash	j_t	*arcmin*	Standard ≤ 3 / Reduced ≤ 2						Standard ≤ 4 / Reduced ≤ 3						
Torsional rigidity [b)]	C_{t21}	*Nm/arcmin*	17						8						
		in.lb/arcmin	150						71						
Max. axial force [c)]	F_{2AMax}	*N*	5000												
		lb_f	1125												
Max. tilting moment	M_{2KMax}	*Nm*	409												
		in.lb	3620												
Efficiency at full load (at n_1 = 500 rpm)	η	%	92	89	86	82	72	64	84	87	84	70	62	70	62
Tilting rigidity	C_{2K}	*Nm/arcmin*	504												
		in.lb/arcmin	4460												
Service life	L_h	*h*	> 20000												
Weight (incl. standard adapter plate)	*m*	*kg*	9.0						9.5						
		lb_m	19.9						21.0						
Operating noise (at reference ratio and reference speed – ratio-specific values available in cymex®)	L_{PA}	*dB(A)*	≤ 62												
Max. permitted housing temperature		*°C*	+90												
		F	194												
Ambient temperature		*°C*	-15 to +40												
		F	5 to 104												
Lubrication			Lubricated for life												
Direction of rotation			In- and output same direction												
Protection class			IP 65												
Metal bellows coupling (recommended product type – validate sizing with cymex®)			BCT-00060AAX-050.000												
Bore diameter of coupling on the application side		*mm*	X = 014.000 - 035.000												
Mass moment of inertia (relates to the drive) Clamping hub diameter [mm] — C 14	J_1	*kgcm²*	-	-	-	-	-	-	0.80	0.80	0.80	0.70	0.70	0.70	0.70
		10^{-3} *in.lb.s²*	-	-	-	-	-	-	0.71	0.71	0.71	0.62	0.62	0.62	0.62
E 19	J_1	*kgcm²*	1.50	1.21	1.12	1.03	1.00	1.05	1.20	1.30	1.20	1.10	1.10	1.10	1.10
		10^{-3} *in.lb.s²*	1.33	1.07	0.99	0.91	0.89	0.93	1.06	1.15	1.06	0.97	0.97	0.97	0.97

Please use our sizing software cymex® for a detailed sizing – **www.wittenstein-cymex.com**
Please contact us for optimum sizing at S1 conditions (Continuous operation).

a) At max. 10 % M_{2KMax}
b) Valid for standard clamping hub diameter
c) Refers to center of the output shaft or flange
d) Please reduce input speed at higher ambient temperatures

View A

Motor shaft diameter [mm]

1-stage

up to 19 [4] (E) [6] clamping hub diameter

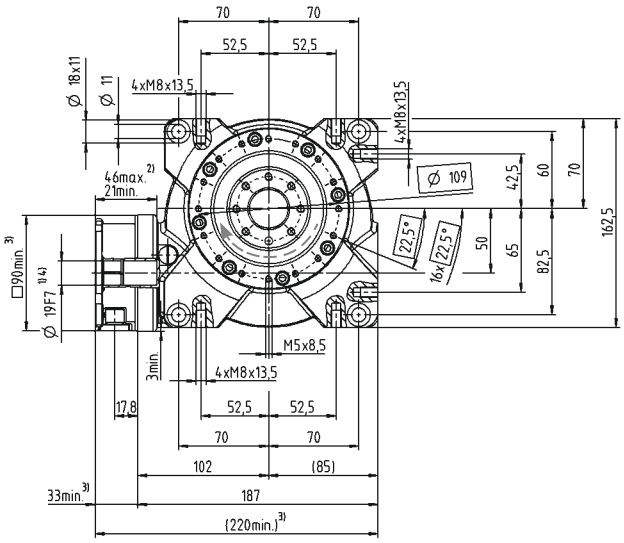

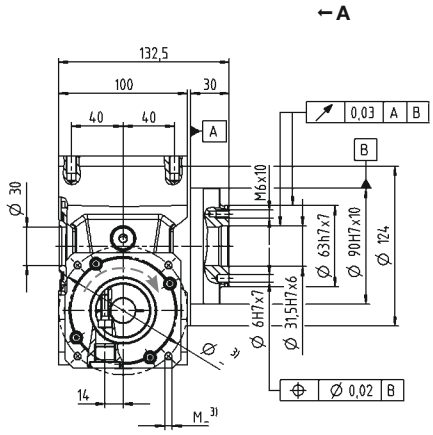

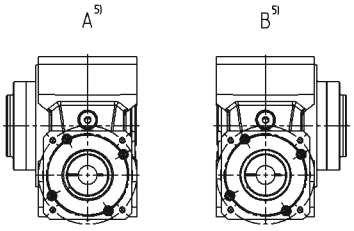

2-stage

up to 14/19 [4] (C [6]/E) clamping hub diameter

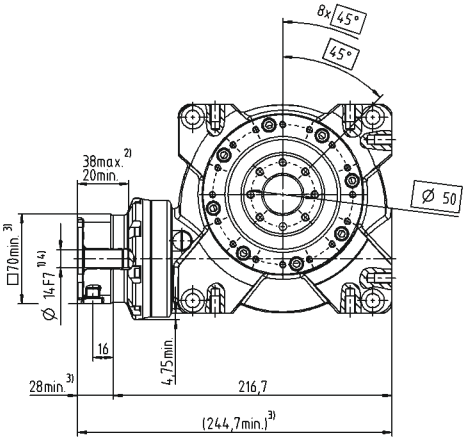

See technical data sheet for available clamping hub diameters (mass moment of inertia). Dimensions available on request.

Non-tolerated dimensions are nominal dimensions

[1] Check motor shaft fit.
[2] Min./Max. permissible motor shaft length. Longer motor shafts are adaptable, please contact us.
[3] The dimensions depend on the motor.
[4] Smaller motor shaft diameter is compensated by a bushing with a minimum thickness of 1 mm.
[5] Output side
[6] Standard clamping hub diameter

VT+ 063 MF 1-/2-stage

				1-stage						2-stage						
Ratio			*i*	**4**	**7**	**10**	**16**	**28**	**40**	**50**	**70**	**100**	**140**	**200**	**280**	**400**
Max. torque [a) b)] (at n_1 = 500 rpm)			T_{2a}	*Nm*	319	353	364	372	392	363	364	353	364	392	363	392	363
				in.lb	2823	3124	3221	3292	3469	3213	3221	3124	3221	3469	3213	3469	3213
Torque for constant backlash (over the lifetime)			T_{2Servo}	*Nm*	198	210	225	221	229	226	225	210	225	229	226	229	226
				in.lb	1752	1859	1991	1956	2027	2000	1991	1859	1991	2027	2000	2027	2000
Emergency stop torque [a) b)] (permitted 1000 times during the service life of the gearbox)			T_{2Not}	*Nm*	460	484	491	494	518	447	491	484	494	518	447	518	447
				in.lb	4071	4283	4345	4372	4584	3956	4345	4283	4372	4584	3956	4584	3956
Permitted average input speed (at 20 °C ambient temperature) [d)]			n_{1N}	*rpm*	4000						3100						
Max. input speed			n_{1Max}	*rpm*	4500												
Mean no load running torque [b)] (at n_1 = 3000 rpm and 20 °C gearbox temperature)			T_{012}	*Nm*	4.2	3.1	3	2.4	2.3	2.2	1.2	0.7	0.7	1.1	1.1	0.8	0.6
				in.lb	37.2	27.4	26.6	21.2	20.4	19.5	10.6	6.2	6.2	9.7	9.7	7.1	5.3
Max. backlash			j_t	*arcmin*	Standard ≤ 3 / Reduced ≤ 2						Standard ≤ 4 / Reduced ≤ 3						
Torsional rigidity [b)]			C_{t21}	*Nm/arcmin*	50						28						
				in.lb/arcmin	443						248						
Max. axial force [c)]			F_{2AMax}	*N*	8250												
				lb_f	1856												
Max. tilting moment			M_{2KMax}	*Nm*	843												
				in.lb	7461												
Efficiency at full load (at n_1 = 500 rpm)			η	%	93	91	88	83	74	68	86	89	86	72	66	72	66
Tilting rigidity			C_{2K}	*Nm/arcmin*	603												
				in.lb/arcmin	5337												
Service life			L_h	*h*	> 20000												
Weight (incl. standard adapter plate)			*m*	*kg*	15.0						15.2						
				lb_m	33						34.0						
Operating noise (at reference ratio and reference speed – ratio-specific values available in cymex®)			L_{PA}	*dB(A)*	≤ 64												
Max. permitted housing temperature				*°C*	+90												
				F	194												
Ambient temperature				*°C*	-15 to +40												
				F	5 to 104												
Lubrication					Lubricated for life												
Direction of rotation					In- and output same direction												
Protection class					IP 65												
Metal bellows coupling (recommended product type – validate sizing with cymex®)					BCT-00150AAX-063.000												
Bore diameter of coupling on the application side				*mm*	X = 019.000 - 042.000												
Mass moment of inertia (relates to the drive) Clamping hub diameter [mm]	E	19	J_1	*kgcm²*	-	-	-	-	-	-	2.60	2.80	2.50	2.40	2.40	2.40	2.30
				10^{-3} *in.lb.s²*	-	-	-	-	-	-	2.30	2.48	2.21	2.12	2.12	2.12	2.04
	G	24	J_1	*kgcm²*	-	-	-	-	-	-	4.10	4.30	4.10	4.00	4.00	3.90	3.90
				10^{-3} *in.lb.s²*	-	-	-	-	-	-	3.63	3.81	3.63	3.54	3.54	3.45	3.45
	H	28	J_1	*kgcm²*	4.80	3.89	3.65	3.56	3.52	3.47	-	-	-	-	-	-	-
				10^{-3} *in.lb.s²*	4.25	3.44	3.23	3.15	3.12	3.07	-	-	-	-	-	-	-

Please use our sizing software cymex® for a detailed sizing – **www.wittenstein-cymex.com**
Please contact us for optimum sizing at S1 conditions (Continuous operation).

[a)] At max. 10 % M_{2KMax}
[b)] Valid for standard clamping hub diameter
[c)] Refers to center of the output shaft or flange
[d)] Please reduce input speed at higher ambient temperatures

View A

Motor shaft diameter [mm]

1-stage

up to 28 [4] (H) [6] clamping hub diameter

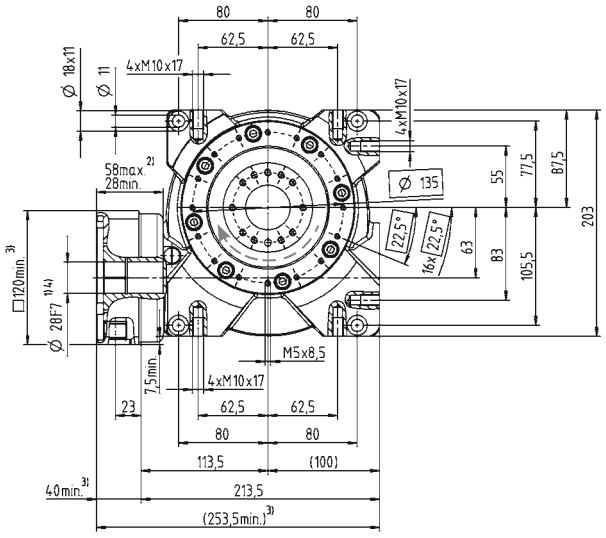

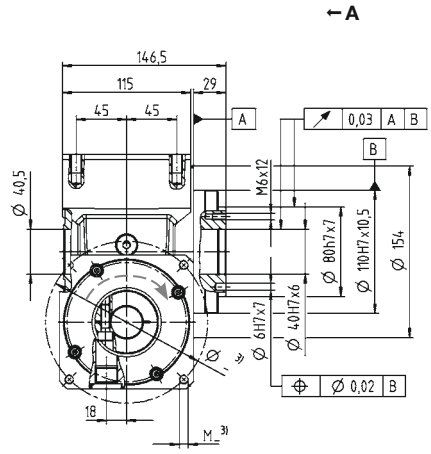

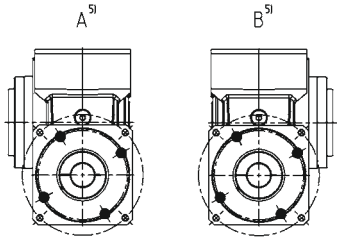

2-stage

up to 19/24 [4] (E [6]/G) clamping hub diameter

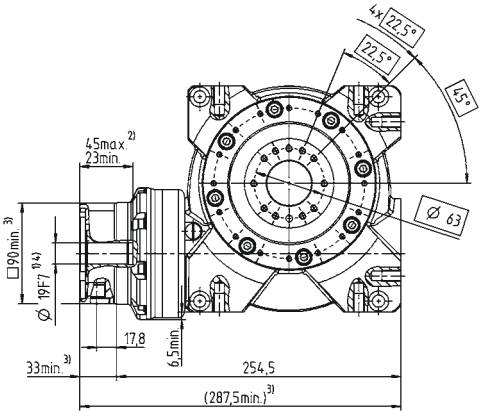

See technical data sheet for available clamping hub diameters (mass moment of inertia). Dimensions available on request.

Non-tolerated dimensions are nominal dimensions

[1] Check motor shaft fit.
[2] Min./Max. permissible motor shaft length. Longer motor shafts are adaptable, please contact us.
[3] The dimensions depend on the motor.
[4] Smaller motor shaft diameter is compensated by a bushing with a minimum thickness of 1 mm.
[5] Output side
[6] Standard clamping hub diameter

VT+ 080 MF 1-/2-stage

				1-stage						2-stage						
Ratio			*i*	**4**	**7**	**10**	**16**	**28**	**40**	**50**	**70**	**100**	**140**	**200**	**280**	**400**
Max. torque [a) b)] (at n_1 = 500 rpm)			T_{2a} *Nm*	578	646	672	702	785	676	672	646	672	785	676	785	676
			T_{2a} *in.lb*	5115	5717	5947	6213	6947	5983	5947	5717	5947	6947	5983	6947	5983
Torque for constant backlash (over the lifetime)			T_{2Servo} *Nm*	469	601	613	677	764	631	613	601	613	764	631	764	631
			T_{2Servo} *in.lb*	4151	5319	5425	5991	6761	5584	5425	5319	5425	6761	5584	6761	5584
Emergency stop torque [a) b)] (permitted 1000 times during the service life of the gearbox)			T_{2Not} *Nm*	938	993	963	1005	1064	941	963	993	963	1064	941	1064	941
			T_{2Not} *in.lb*	8301	8788	8523	8894	9416	8328	8523	8788	8523	9416	8328	9416	8328
Permitted average input speed (at 20 °C ambient temperature) [d)]			n_{1N} *rpm*	3500						2900						
Max. input speed			n_{1Max} *rpm*	4000						4500						
Mean no load running torque [b)] (at n_1 = 3000 rpm and 20 °C gearbox temperature)			T_{012} *Nm*	7.2	7.1	6.5	5	4.8	4.5	2.8	1.6	1.5	2.4	2.4	1.8	1.3
			T_{012} *in.lb*	63.7	62.8	57.5	44.3	42.5	39.8	24.8	14.2	13.3	21.2	21.2	15.9	11.5
Max. backlash			j_t *arcmin*	Standard ≤ 3 / Reduced ≤ 2						Standard ≤ 4 / Reduced ≤ 3						
Torsional rigidity [b)]			C_{t21} *Nm/arcmin*	113						78						
			C_{t21} *in.lb/arcmin*	1000						690						
Max. axial force [c)]			F_{2AMax} *N*	13900												
			F_{2AMax} lb_f	3128												
Max. tilting moment			M_{2KMax} *Nm*	1544												
			M_{2KMax} *in.lb*	13664												
Efficiency at full load (at n_1 = 500 rpm)			η %	94	92	89	86	77	70	87	90	87	75	68	75	68
Tilting rigidity			C_{2K} *Nm/arcmin*	1178												
			C_{2K} *in.lb/arcmin*	10425												
Service life			L_h *h*	> 20000												
Weight (incl. standard adapter plate)			*m* *kg*	32.0						33.5						
			m lb_m	70.7						74.0						
Operating noise (at reference ratio and reference speed – ratio-specific values available in cymex®)			L_{PA} *dB(A)*	≤ 66						≤ 68						
Max. permitted housing temperature			*°C*	+90												
			F	194												
Ambient temperature			*°C*	-15 to +40												
			F	5 to 104												
Lubrication				Lubricated for life												
Direction of rotation				In- and output same direction												
Protection class				IP 65												
Metal bellows coupling (recommended product type – validate sizing with cymex®)				BCT-00300AAX-080.000												
Bore diameter of coupling on the application side			*mm*	X = 024.000 - 060.000												
Mass moment of inertia (relates to the drive) Clamping hub diameter [mm]	G	24	J_1 *kgcm²*	-	-	-	-	-	-	10.40	10.10	10.10	8.80	9.50	9.40	9.30
			J_1 10^{-3} *in.lb.s²*	-	-	-	-	-	-	9.20	8.94	8.94	7.79	8.41	8.32	8.23
	K	38	J_1 *kgcm²*	20.30	16.56	16.69	15.33	15.24	15.90	17.30	17.00	17.10	15.80	16.40	16.30	16.20
			J_1 10^{-3} *in.lb.s²*	17.97	14.66	14.77	13.57	13.49	14.07	15.31	15.05	15.13	13.98	14.51	14.43	14.34

Please use our sizing software cymex® for a detailed sizing – **www.wittenstein-cymex.com**
Please contact us for optimum sizing at S1 conditions (Continuous operation).

[a)] At max. 10 % M_{2KMax}
[b)] Valid for standard clamping hub diameter
[c)] Refers to center of the output shaft or flange
[d)] Please reduce input speed at higher ambient temperatures

View A

Motor shaft diameter [mm]

1-stage

up to 38 [4] (K)[6] clamping hub diameter

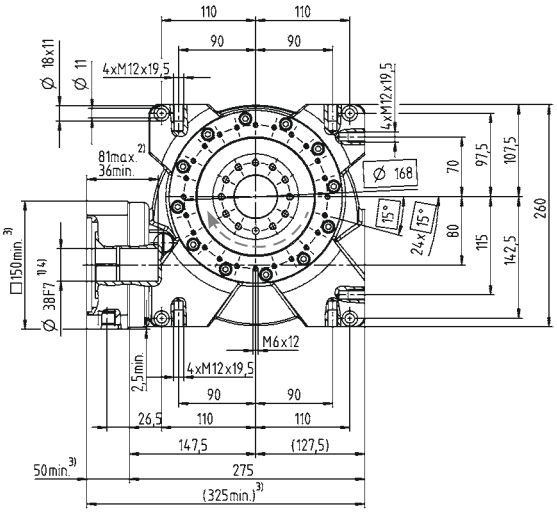

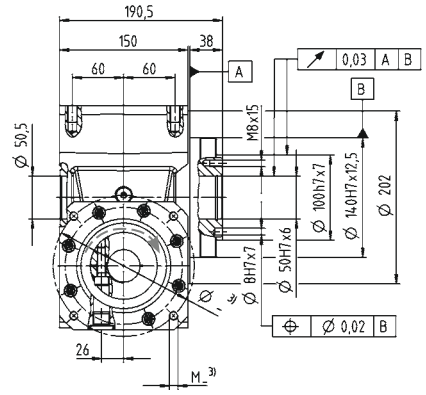

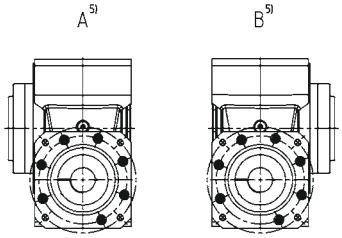

2-stage

up to 24/38 [4] (G[6]/K) clamping hub diameter

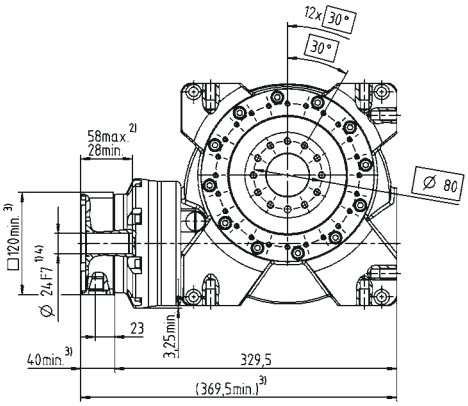

See technical data sheet for available clamping hub diameters (mass moment of inertia). Dimensions available on request.

Non-tolerated dimensions are nominal dimensions

[1] Check motor shaft fit.
[2] Min./Max. permissible motor shaft length. Longer motor shafts are adaptable, please contact us.
[3] The dimensions depend on the motor.
[4] Smaller motor shaft diameter is compensated by a bushing with a minimum thickness of 1 mm.
[5] Output side
[6] Standard clamping hub diameter

VT+ 100 MF 1-/2-stage

				1-stage						2-stage						
Ratio			*i*	**4**	**7**	**10**	**16**	**28**	**40**	**50**	**70**	**100**	**140**	**200**	**280**	**400**
Max. torque [a) b)] (at n_1 = 500 rpm)			T_{2a} *Nm*	1184	1336	1377	1392	1505	1376	1377	1377	1377	1505	1376	1505	1376
			T_{2a} *in.lb*	10478	11824	12186	12319	13319	12178	12186	12186	12186	13319	12178	13319	12178
Torque for constant backlash (over the lifetime)			T_{2Servo} *Nm*	1155	1304	1343	1359	1469	1343	1343	1343	1343	1469	1343	1469	1343
			T_{2Servo} *in.lb*	10222	11540	11886	12027	13001	11886	11886	11886	11886	13001	11886	13001	11886
Emergency stop torque [a) b)] (permitted 1000 times during the service life of the gearbox)			T_{2Not} *Nm*	1819	1932	1940	1955	2073	1856	1940	1940	1940	2073	1856	2073	1856
			T_{2Not} *in.lb*	16098	17098	17169	17302	18346	16426	17169	17169	17169	18346	16426	18346	16426
Permitted average input speed (at 20 °C ambient temperature) [d)]			n_{1N} *rpm*	3000						2700						
Max. input speed			n_{1Max} *rpm*	3500						4000						
Mean no load running torque [b)] (at n_1 = 3000 rpm and 20 °C gearbox temperature)			T_{012} *Nm*	12.2	10.5	9.8	9.1	8.2	7.2	4.1	2.3	2.2	3.8	3.6	2.6	2
			T_{012} *in.lb*	108.0	92.9	86.7	80.5	72.6	63.7	36.3	20.4	19.5	33.6	31.9	23.0	17.7
Max. backlash			j_t *arcmin*	Standard ≤ 3 / Reduced ≤ 2						Standard ≤ 4 / Reduced ≤ 3						
Torsional rigidity [b)]			C_{t21} *Nm/arcmin*	213						153						
			C_{t21} *in.lb/arcmin*	1885						1354						
Max. axial force [c)]			F_{2AMax} *N*	19500												
			F_{2AMax} lb_f	4388												
Max. tilting moment			M_{2KMax} *Nm*	3059												
			M_{2KMax} *in.lb*	27072												
Efficiency at full load (at n_1 = 500 rpm)			η %	95	93	91	87	80	76	89	89	89	78	74	78	74
Tilting rigidity			C_{2K} *Nm/arcmin*	2309												
			C_{2K} *in.lb/arcmin*	20435												
Service life			L_h *h*	> 20000												
Weight (incl. standard adapter plate)			*m* *kg*	63.0						64.6						
			m lb_m	139.0						143.0						
Operating noise (at reference ratio and reference speed – ratio-specific values available in cymex®)			L_{PA} *dB(A)*	≤ 70												
Max. permitted housing temperature			*°C*	+90												
			F	194												
Ambient temperature			*°C*	-15 to +40												
			F	5 to 104												
Lubrication				Lubricated for life												
Direction of rotation				In- and output same direction												
Protection class				IP 65												
Metal bellows coupling (recommended product type – validate sizing with cymex®)				BCT-01500AAX-125.000												
Bore diameter of coupling on the application side			*mm*	X = 050.000 - 080.000												
Mass moment of inertia (relates to the drive) Clamping hub diameter [mm]	K	38	J_1 *kgcm²*	-	-	-	-	-	-	31.70	33.00	31.10	30.10	30.40	30.00	29.80
			J_1 10^{-3} *in.lb.s²*	-	-	-	-	-	-	28.05	29.21	27.52	26.64	26.90	26.55	26.37
	M	48	J_1 *kgcm²*	50.02	40.63	38.73	39.60	37.14	37.47	46.40	47.70	45.80	44.80	45.10	44.70	44.50
			J_1 10^{-3} *in.lb.s²*	44.27	35.96	34.28	35.05	32.87	33.16	41.06	42.21	40.53	39.65	39.91	39.56	39.38

Please use our sizing software cymex® for a detailed sizing – **www.wittenstein-cymex.com**
Please contact us for optimum sizing at S1 conditions (Continuous operation).

[a)] At max. 10 % M_{2KMax}
[b)] Valid for standard clamping hub diameter
[c)] Refers to center of the output shaft or flange
[d)] Please reduce input speed at higher ambient temperatures

View A

Motor shaft diameter [mm]

1-stage

up to 48 [4] (M)[6] clamping hub diameter

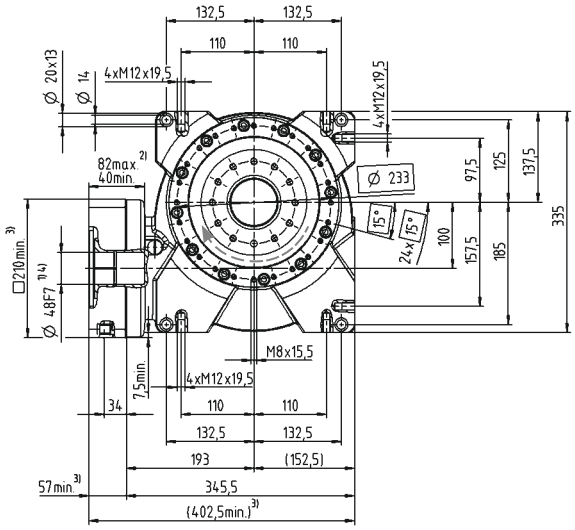

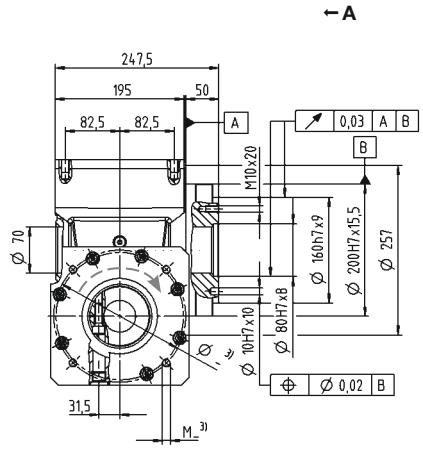

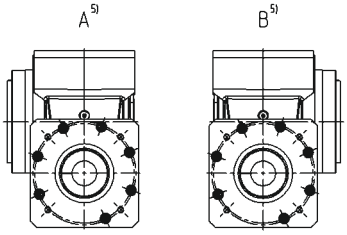

2-stage

up to 38/48 [4] (K[6]/M) clamping hub diameter

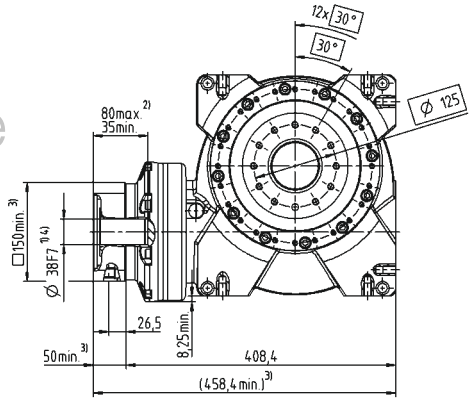

See technical data sheet for available clamping hub diameters (mass moment of inertia). Dimensions available on request.

Non-tolerated dimensions are nominal dimensions

1) Check motor shaft fit.
2) Min./Max. permissible motor shaft length. Longer motor shafts are adaptable, please contact us.
3) The dimensions depend on the motor.
4) Smaller motor shaft diameter is compensated by a bushing with a minimum thickness of 1 mm.
5) Output side
6) Standard clamping hub diameter

Application-specific solutions

The right solution for all requirements

Varying customer requirements create major challenges for Delta robots and require continuous further development of the drives. For more than ten years, WITTENSTEIN has been developing and manufacturing gearbox and actuator solutions for Delta robots that are just as individual as the applications of our customers. With unique engineering experience, recognized methodological competencies and software expertise as well as a high-performance product portfolio, we offer our customers the security of a technically and economically refined drive design for highly dynamic, multidimensional movement profiles.

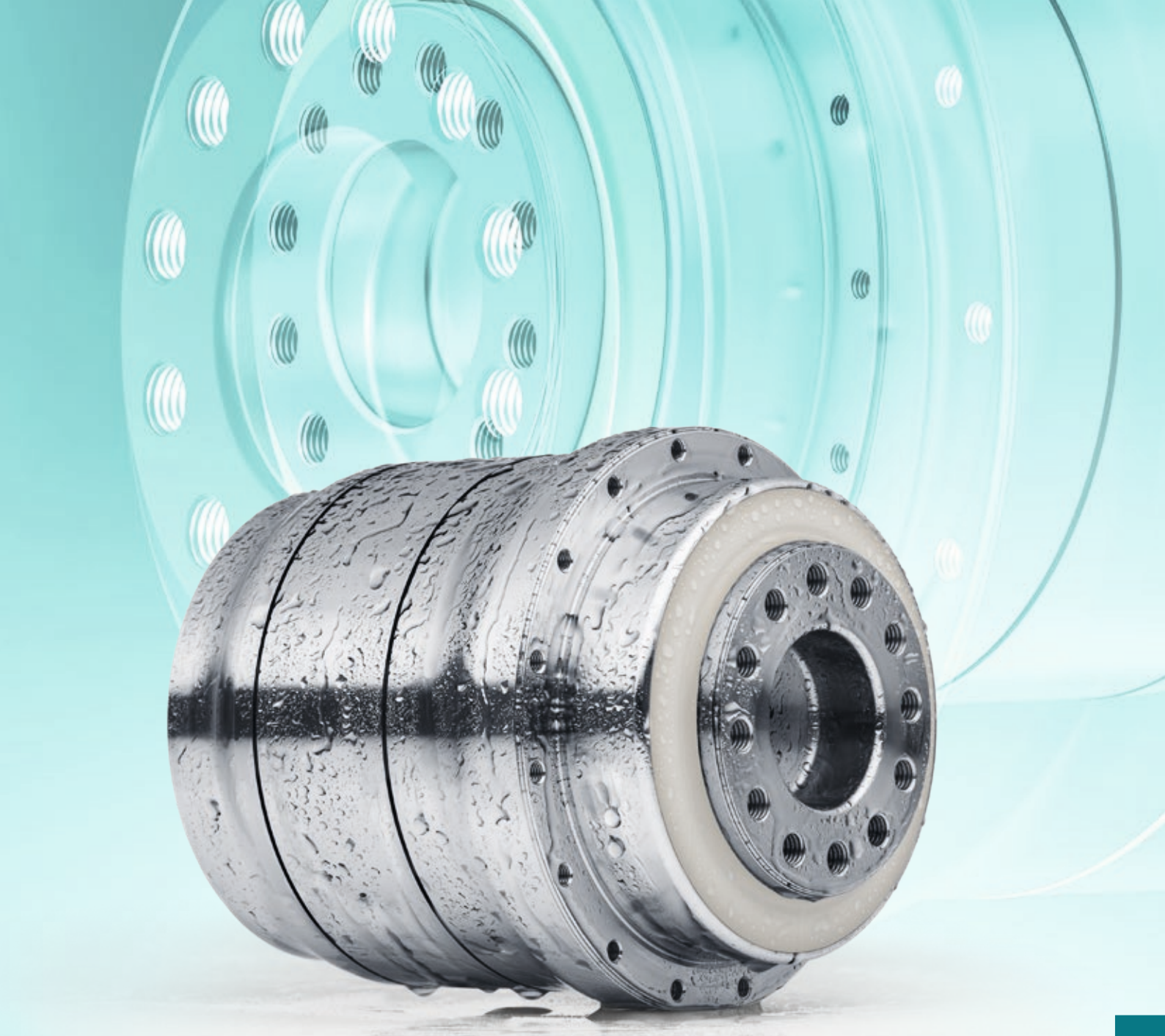

Hygienically safe drive

Our products with hygienic design are specially developed for challenging food processing applications, made of highly resistant stainless steel and ideal for cleaning with aggressive cleaning agents and disinfectants.
Direct process integration allows new freedom in design and an open machine concept without encasings.

DP+ – The right solution for all requirements

The DP+ planetary gearbox was specially developed for use in Delta robotics applications. Various characteristics allow use of the gearbox in dry, spray and wet areas (HDP+). In addition to an optimized sealing system, this drive solution includes advantages such as improved dynamics due to the optimized moment of inertia. The DP+ is available in four sizes and covers a ratio range of i = 16 – 55.

Product highlights

Reliability Extremely reliable gearboxes prevent cost-intensive machine breakdowns

Positioning accuracy Minimal backlash and extreme rigidity ensure maximum positioning accuracy at the tool center point

Speed Highest speeds increase machine output

Maintenance Highest quality standards guarantee a long service life and extend maintenance intervals

Consistently high performance Constant backlash throughout the service life of the gearbox ensures a consistently high performance

Low inertia Use of an actuator further reduces inertia

The DP+ compared to the industry standard

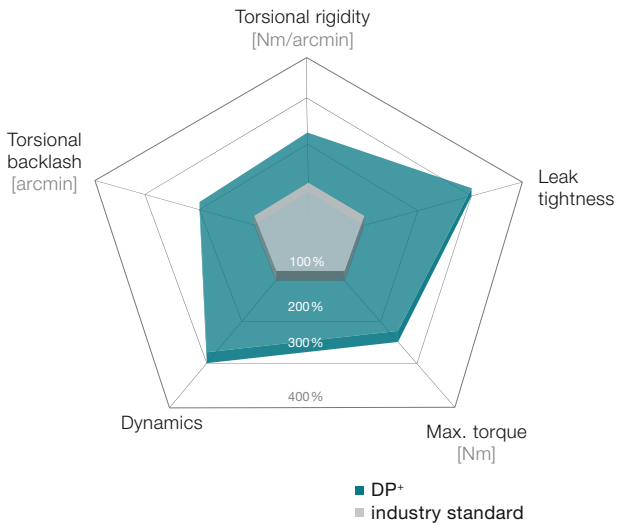

Dry area

Fields of application: Secondary packaging, Handling, Mounting, Intralogistics …

Spray area (close to the process)

Fields of application: Pharmaceutical industry, Medical technology, Primary packaging without hygiene design requirements, Clean room…

More information on Delta robotics: simply scan the QR code with your smartphone.

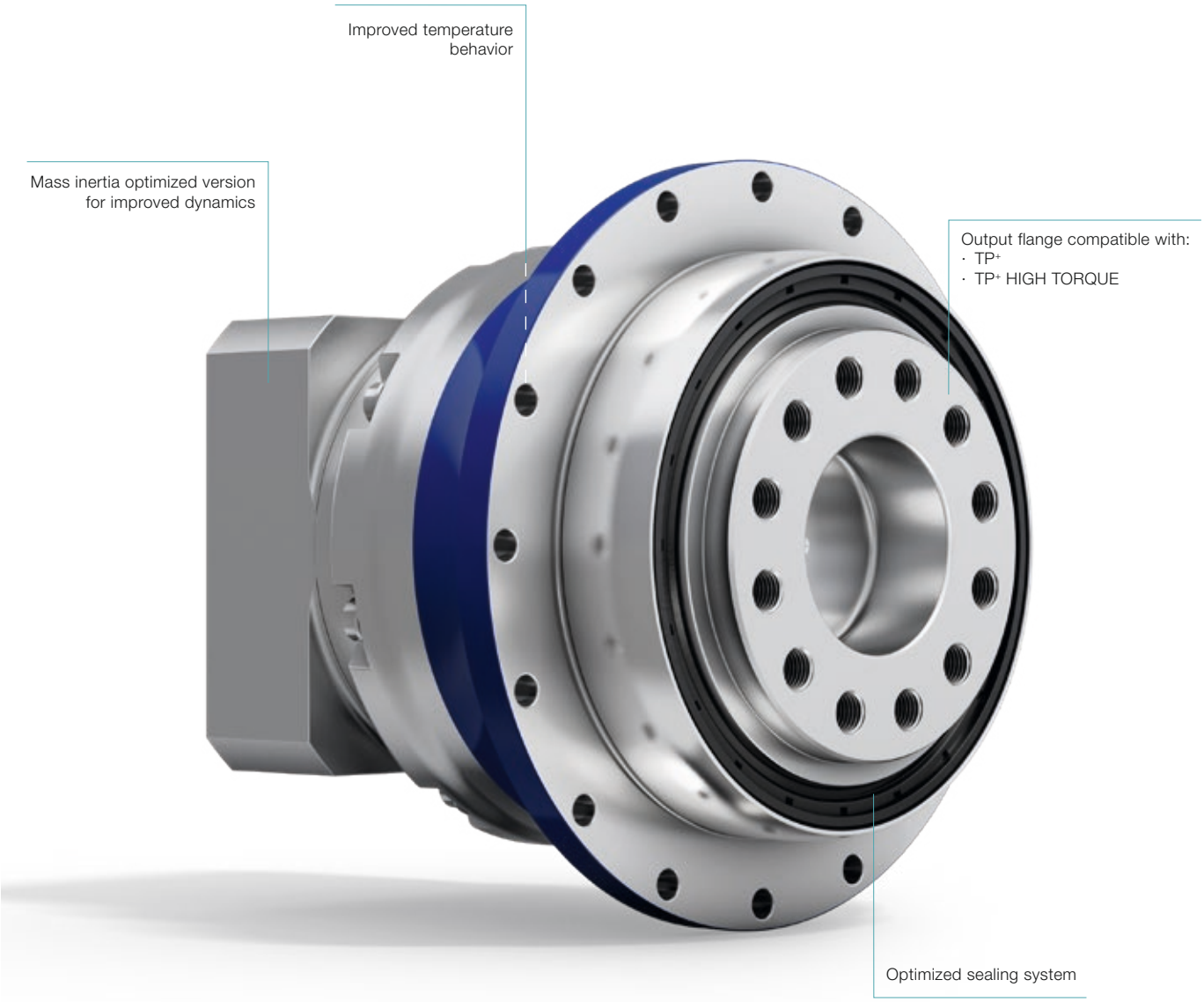

Wet area (integrated in the process)

Fields of application: Primary packaging with hygiene design requirements

We are happy to advise you on individual solutions for your project-specific requirements.

Custom solutions

DP+ 004 MF 2-stage

			2-stage									
Ratio	i		**16**	**20**	**21**	**25**	**28**	**31**	**32**	**35**	**40**	**50**
Max. torque [a) b)]	T_{2a}	*Nm*	57	57	60	72	57	50	57	72	57	72
		in.lb	507	507	533	634	507	442	507	634	507	634
Max. acceleration torque [b)] (max. 1000 cycles per hour)	T_{2B}	*Nm*	57	57	48	66	57	48	57	66	57	66
		in.lb	507	507	425	584	507	425	507	584	507	584
Nominal torque (at n_{1N})	T_{2N}	*Nm*	39	41	32	41	45	36	39	45	46	48
		in.lb	342	365	286	361	403	320	343	399	406	421
Emergency stop torque [a) b)] (permitted 1000 times during the service life of the gearbox)	T_{2Not}	*Nm*	100	100	100	100	100	100	100	100	100	100
		in.lb	885	885	885	885	885	885	885	885	885	885
Permitted average input speed (at T_{2N} and 20 °C ambient temperature) [d)]	n_{1N}	*rpm*	4000	4000	4000	4000	4000	4000	4000	4000	4000	4800
Max. input speed	n_{1Max}	*rpm*	7500	7500	7500	7500	7500	7500	7500	7500	7500	7500
Mean no load running torque [b)] (at n_1 = 3000 rpm and 20 °C gearbox temperature)	T_{012}	*Nm*	0.28	0.23	0.24	0.22	0.21	0.22	0.21	0.17	0.18	0.17
		in.lb	2.5	2.0	2.1	1.9	1.9	1.9	1.9	1.5	1.6	1.5
Max. backlash	j_t	*arcmin*	Standard ≤ 4 / Reduced ≤ 2									
Torsional rigidity [b)]	C_{t21}	*Nm/arcmin*	12	12	10	12	12	9	12	12	11	12
		in.lb/arcmin	106	106	89	106	106	80	106	106	97	106
Tilting rigidity	C_{2K}	*Nm/arcmin*	85									
		in.lb/arcmin	752									
Max. axial force [c)]	F_{2AMax}	*N*	2119									
		lb_f	477									
Max. tilting moment	M_{2KMax}	*Nm*	110									
		in.lb	974									
Efficiency at full load	η	%	94									
Service life	L_h	*h*	> 20000									
Weight (incl. standard adapter plate)	m	*kg*	1.5									
		lb_m	3.3									
Operating noise (at reference ratio and reference speed – ratio-specific values available in cymex®)	L_{PA}	*dB(A)*	≤ 54									
Max. permitted housing temperature		°C	+90									
		F	194									
Ambient temperature		°C	–15 to +40									
		F	5 to 104									
Lubrication			Lubricated for life									
Direction of rotation			In- and output same direction									
Protection class			IP 65									
Metal bellows coupling (recommended product type – validate sizing with cymex®)			-									
Bore diameter of coupling on the application side		*mm*	-									
Mass moment of inertia (relates to the drive) B 11	J_1	$kgcm^2$	0.078	0.070	0.074	0.068	0.062	0.072	0.062	0.061	0.057	0.057
		10^{-3} $in.lb.s^2$	0.069	0.062	0.065	0.060	0.055	0.064	0.055	0.054	0.050	0.050
Clamping hub diameter [mm] C 14	J_1	$kgcm^2$	0.17	0.17	0.17	0.16	0.16	0.17	0.16	0.16	0.15	0.15
Optimized mass inertia version available on request		10^{-3} $in.lb.s^2$	0.15	0.15	0.15	0.15	0.14	0.15	0.14	0.14	0.14	0.14

Please use our sizing software cymex® for a detailed sizing – **www.wittenstein-cymex.com**

[a)] At max. 10 % M_{2KMax}
[b)] Valid for standard clamping hub diameter
[c)] Refers to center of the output shaft or flange
[d)] Please reduce input speed at higher ambient temperatures

View A | View B

2-stage

Motor shaft diameter [mm]

up to 11 [4] (B)[5] clamping hub diameter

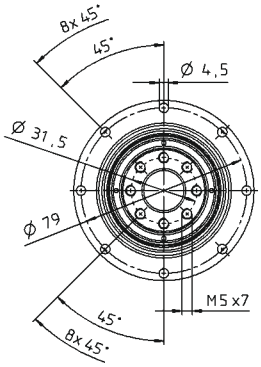

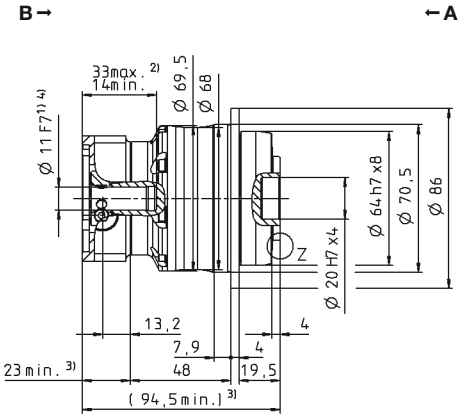

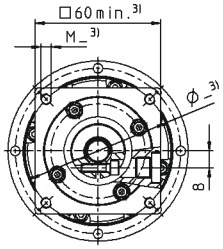

up to 14 [4] (C) clamping hub diameter

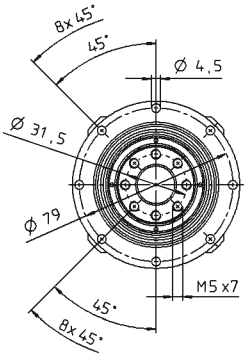

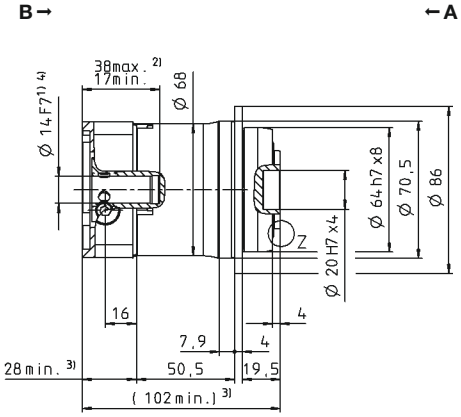

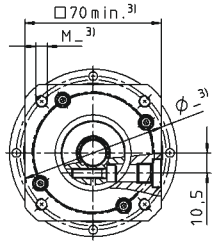

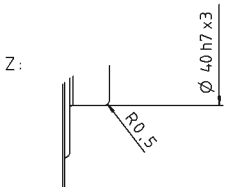

Non-tolerated dimensions are nominal dimensions

1) Check motor shaft fit
2) Min./Max. permissible motor shaft length. Longer motor shafts are possible, please contact alpha.
3) The dimensions depend on the motor
4) Smaller motor shaft diameter is compensated by a bushing with a minimum thickness of 1 mm
5) Standard clamping hub diameter

DP+ 010 MF 2-stage

			2-stage									
Ratio	i		**16**	**20**	**21**	**25**	**28**	**31**	**32**	**35**	**40**	**50**
Max. torque [a) b)]	T_{2a}	*Nm*	157	126	133	158	157	121	157	158	154	158
		in.lb	1392	1118	1174	1398	1392	1071	1392	1398	1363	1398
Max. acceleration torque [b)] (max. 1000 cycles per hour)	T_{2B}	*Nm*	157	126	120	158	157	121	157	158	154	158
		in.lb	1392	1113	1062	1398	1392	1071	1392	1398	1363	1398
Nominal torque (at n_{1N})	T_{2N}	*Nm*	106	101	96	124	107	87	119	126	112	126
		in.lb	935	895	850	1097	945	770	1053	1118	987	1118
Emergency stop torque [a) b)] (permitted 1000 times during the service life of the gearbox)	T_{2Not}	*Nm*	251	251	251	251	251	251	251	251	251	251
		in.lb	2222	2222	2222	2222	2222	2222	2222	2222	2222	2222
Permitted average input speed (at T_{2N} and 20 °C ambient temperature) [d)]	n_{1N}	*rpm*	3500	3500	3500	3500	3500	3500	3500	3500	3500	3800
Max. input speed	n_{1Max}	*rpm*	7500	7500	7500	7500	7500	7500	7500	7500	7500	7500
Mean no load running torque [b)] (at n_1 = 3000 rpm and 20 °C gearbox temperature)	T_{012}	*Nm*	0.56	0.48	0.47	0.44	0.40	0.40	0.40	0.28	0.32	0.32
		in.lb	5.0	4.2	4.2	3.9	3.5	3.5	3.5	2.5	2.8	2.8
Max. backlash	j_t	*arcmin*	Standard ≤ 3 / Reduced ≤ 1									
Torsional rigidity [b)]	C_{t21}	*Nm/arcmin*	32	32	26	32	31	24	31	32	30	30
		in.lb/arcmin	283	283	230	283	274	212	274	283	266	266
Tilting rigidity	C_{2K}	*Nm/arcmin*	225									
		in.lb/arcmin	1991									
Max. axial force [c)]	F_{2AMax}	*N*	2795									
		lb_f	629									
Max. tilting moment	M_{2KMax}	*Nm*	270									
		in.lb	2390									
Efficiency at full load	η	%	94									
Service life	L_h	*h*	> 20000									
Weight (incl. standard adapter plate)	m	*kg*	3.6									
		lb_m	8.0									
Operating noise (at reference ratio and reference speed – ratio-specific values available in cymex®)	L_{PA}	*dB(A)*	≤ 55									
Max. permitted housing temperature		*°C*	+90									
		F	194									
Ambient temperature		*°C*	–15 to +40									
		F	5 to 104									
Lubrication			Lubricated for life									
Direction of rotation			In- and output same direction									
Protection class			IP 65									
Metal bellows coupling (recommended product type – validate sizing with cymex®)			-									
Bore diameter of coupling on the application side		*mm*	-									
Mass moment of inertia (relates to the drive) B 11	J_1	$kgcm^2$	0.17	0.14	0.15	0.13	0.11	0.14	0.11	0.10	0.09	0.09
		10^{-3} $in.lb.s^2$	0.15	0.12	0.13	0.12	0.10	0.12	0.10	0.09	0.08	0.08
Clamping hub diameter [mm] C 14	J_1	$kgcm^2$	0.24	0.21	0.22	0.20	0.18	0.21	0.18	0.18	0.17	0.17
		10^{-3} $in.lb.s^2$	0.21	0.19	0.20	0.18	0.16	0.18	0.16	0.16	0.15	0.15
Optimized mass inertia version available on request E 19	J_1	$kgcm^2$	0.56	0.53	0.55	0.53	0.51	0.53	0.51	0.50	0.49	0.49
		10^{-3} $in.lb.s^2$	0.50	0.47	0.48	0.47	0.45	0.47	0.45	0.44	0.43	0.43

Please use our sizing software cymex® for a detailed sizing – **www.wittenstein-cymex.com**

[a)] At max. 10 % M_{2KMax}
[b)] Valid for standard clamping hub diameter
[c)] Refers to center of the output shaft or flange
[d)] Please reduce input speed at higher ambient temperatures

View A | View B

2-stage

Motor shaft diameter [mm]

up to 11 [4] (B) clamping hub diameter

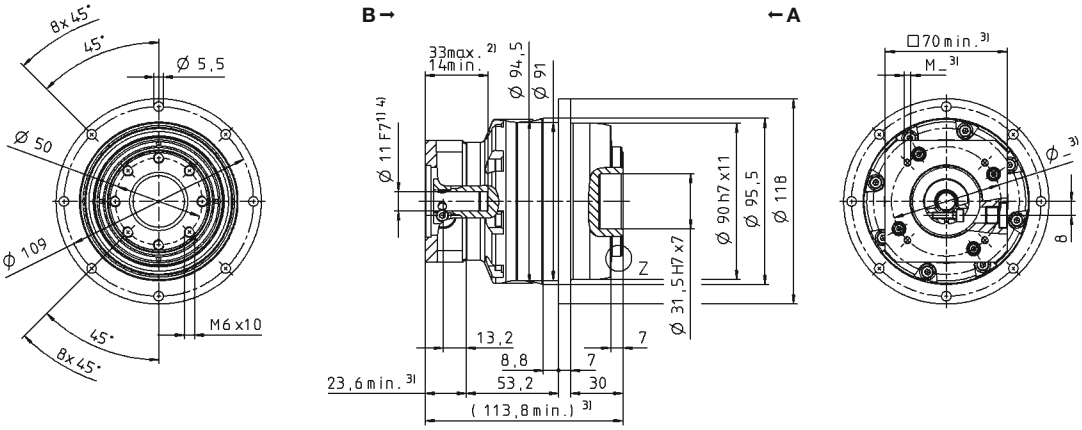

up to 14 [4] (C) [5] clamping hub diameter

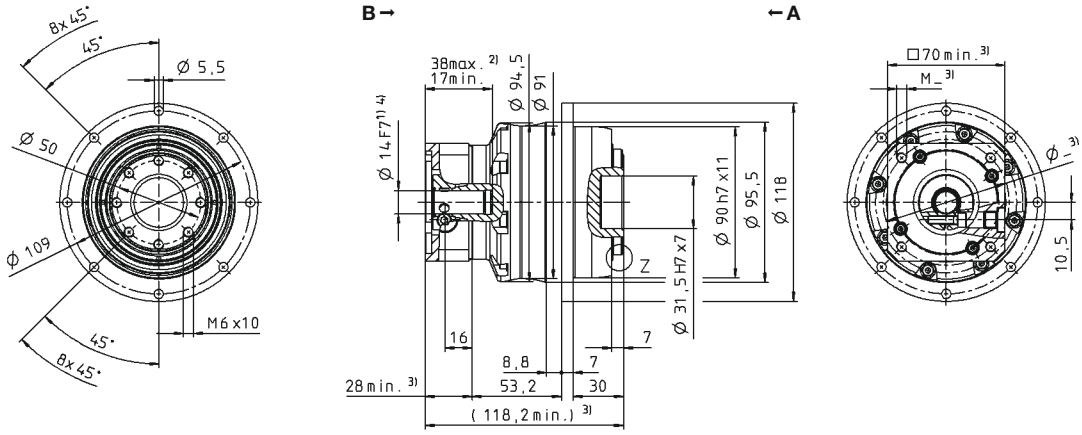

up to 19 [4] (E) clamping hub diameter

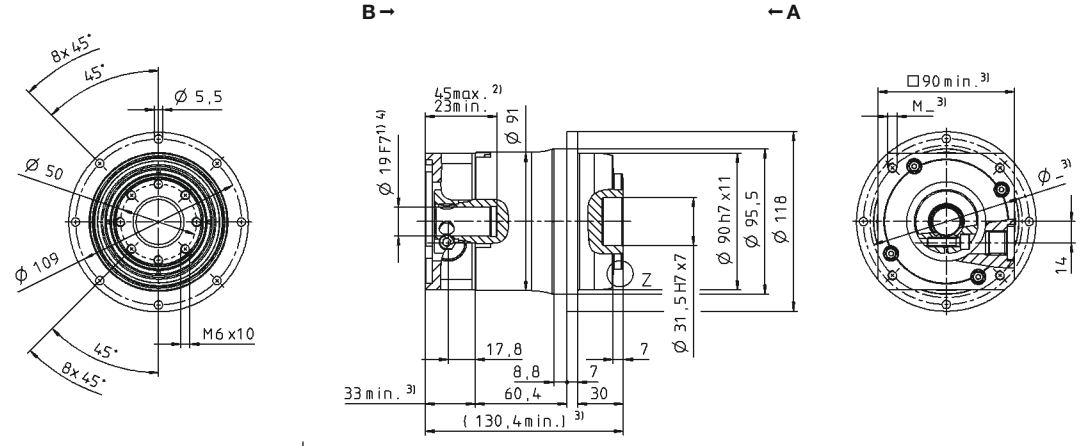

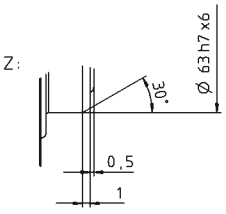

Non-tolerated dimensions are nominal dimensions

[1] Check motor shaft fit

[2] Min./Max. permissible motor shaft length. Longer motor shafts are possible, please contact alpha.

[3] The dimensions depend on the motor

[4] Smaller motor shaft diameter is compensated by a bushing with a minimum thickness of 1 mm

[5] Standard clamping hub diameter

			2-stage									
Ratio	i		**16**	**20**	**21**	**25**	**28**	**31**	**32**	**35**	**40**	**50**
Max. torque [a) b)]	T_{2a}	*Nm*	352	352	352	380	352	352	352	380	352	380
		in.lb	3115	3115	3115	3363	3115	3115	3115	3363	3115	3363
Max. acceleration torque [b)] (max. 1000 cycles per hour)	T_{2B}	*Nm*	352	352	330	380	352	330	352	380	352	380
		in.lb	3115	3115	2921	3363	3115	2921	3115	3363	3115	3363
Nominal torque (at n_{1N})	T_{2N}	*Nm*	250	267	211	265	282	231	251	294	282	304
		in.lb	2213	2366	1872	2348	2492	2047	2220	2598	2492	2691
Emergency stop torque [a) b)] (permitted 1000 times during the service life of the gearbox)	T_{2Not}	*Nm*	625	625	625	625	625	625	625	625	625	625
		in.lb	5532	5532	5532	5532	5532	5532	5532	5532	5532	5532
Permitted average input speed (at T_{2N} and 20 °C ambient temperature) [d)]	n_{1N}	*rpm*	2800	2800	2800	2800	2800	2800	2800	2800	2800	3100
Max. input speed	n_{1Max}	*rpm*	7500	7500	7500	7500	7500	7500	7500	7500	7500	7500
Mean no load running torque [b)] (at n_1 = 3000 rpm and 20 °C gearbox temperature)	T_{012}	*Nm*	1.2	1.0	1.1	0.90	0.80	0.84	0.80	0.60	0.59	0.50
		in.lb	10	8.9	9.9	8.0	7.1	7.4	7.1	5.3	5.2	4.4
Max. backlash	j_t	*arcmin*	Standard ≤ 3 / Reduced ≤ 1									
Torsional rigidity [b)]	C_{t21}	*Nm/arcmin*	81	81	70	83	80	54	80	82	76	80
		in.lb/arcmin	717	717	620	735	708	478	708	726	673	708
Tilting rigidity	C_{2K}	*Nm/arcmin*	550									
		in.lb/arcmin	4868									
Max. axial force [c)]	F_{2AMax}	*N*	4800									
		lb_f	1080									
Max. tilting moment	M_{2KMax}	*Nm*	440									
		in.lb	3894									
Efficiency at full load	η	%	94									
Service life	L_h	*h*	> 20000									
Weight (incl. standard adapter plate)	m	*kg*	6.7									
		lb_m	14.8									
Operating noise (at reference ratio and reference speed – ratio-specific values available in cymex®)	L_{PA}	*dB(A)*	≤ 58									
Max. permitted housing temperature		*°C*	+90									
		F	194									
Ambient temperature		*°C*	–15 to +40									
		F	5 to 104									
Lubrication			Lubricated for life									
Direction of rotation			In- and output same direction									
Protection class			IP 65									
Metal bellows coupling (recommended product type – validate sizing with cymex®)			-									
Bore diameter of coupling on the application side		*mm*	-									
Mass moment of inertia (relates to the drive) — C 14	J_1	$kgcm^2$	0.66	0.55	0.60	0.53	0.44	0.55	0.44	0.43	0.38	0.38
		10^{-3} $in.lb.s^2$	0.58	0.48	0.53	0.47	0.39	0.49	0.39	0.38	0.34	0.33
Mass moment of inertia (relates to the drive) — E 19	J_1	$kgcm^2$	0.83	0.71	0.77	0.70	0.61	0.72	0.61	0.60	0.55	0.55
		10^{-3} $in.lb.s^2$	0.73	0.63	0.68	0.62	0.54	0.64	0.54	0.53	0.49	0.48
Mass moment of inertia (relates to the drive) — G 24	J_1	$kgcm^2$	2.20	2.08	2.14	2.07	1.98	2.09	1.98	1.97	1.92	1.92
		10^{-3} $in.lb.s^2$	1.95	1.84	1.89	1.83	1.75	1.85	1.75	1.74	1.70	1.70
Mass moment of inertia (relates to the drive) — H 28	J_1	$kgcm^2$	2.00	1.91	1.96	1.89	1.82	1.85	1.89	1.81	1.76	1.76
		10^{-3} $in.lb.s^2$	1.77	1.69	1.73	1.67	1.61	1.64	1.67	1.60	1.56	1.56

Clamping hub diameter [mm]

Optimized mass inertia version available on request

Please use our sizing software cymex® for a detailed sizing – **www.wittenstein-cymex.com**

[a)] At max. 10 % M_{2KMax}
[b)] Valid for standard clamping hub diameter
[c)] Refers to center of the output shaft or flange
[d)] Please reduce input speed at higher ambient temperatures

View A | View B

2-stage

Motor shaft diameter [mm]

up to 14 [4] (C) clamping hub diameter

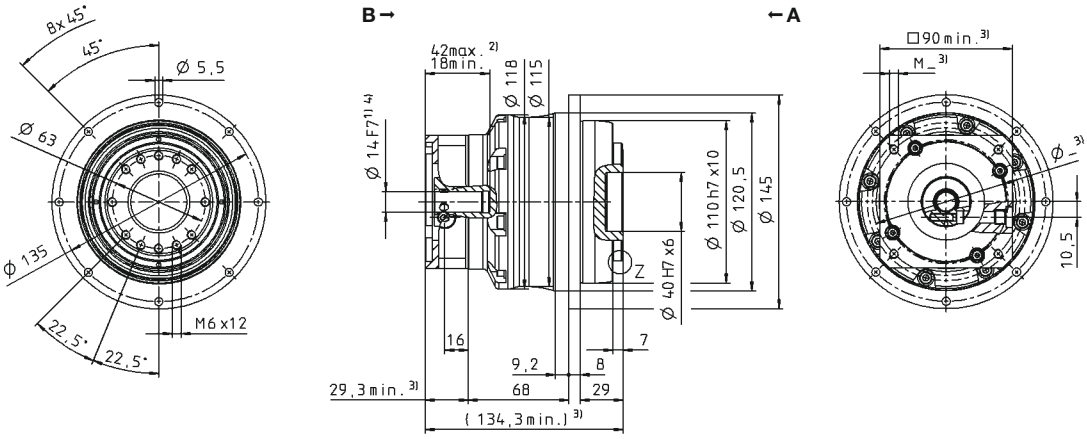

up to 19 [4] (E) [5] clamping hub diameter

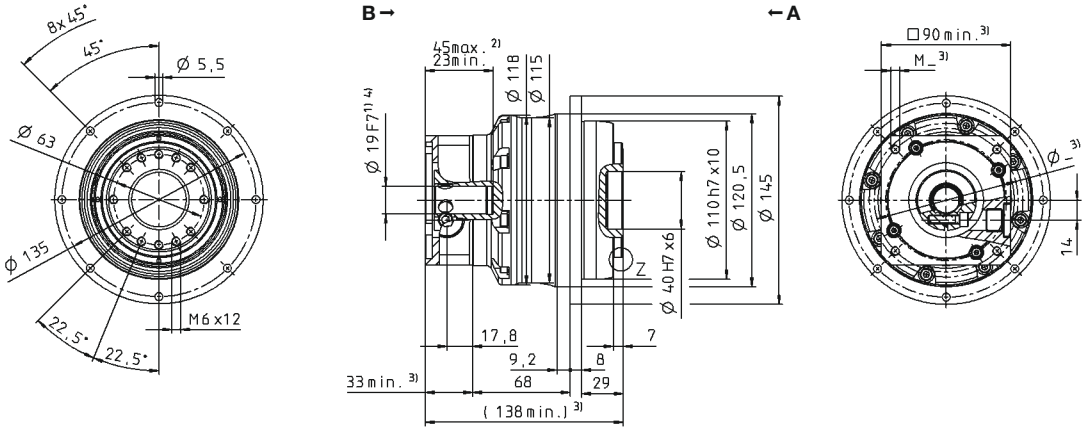

up to 24/28 [4] (G/H) clamping hub diameter

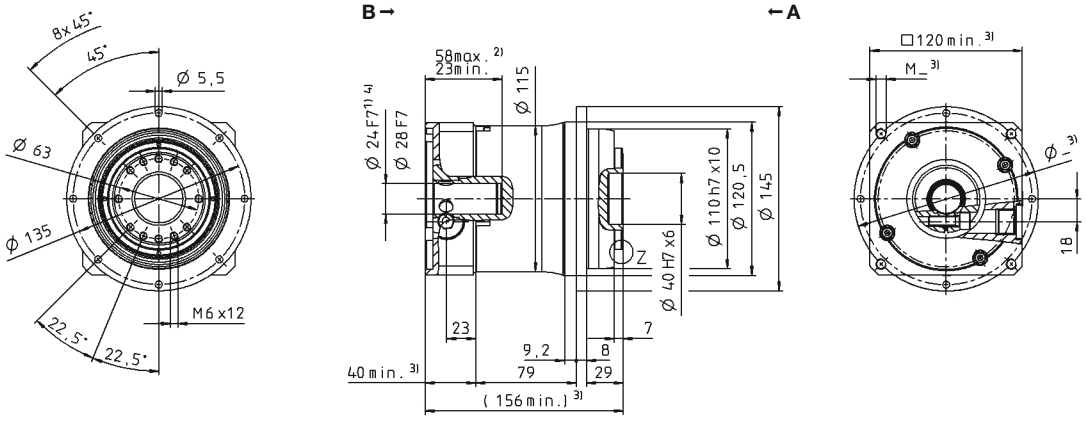

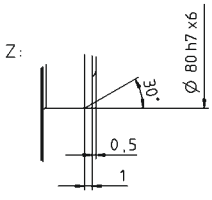

Non-tolerated dimensions are nominal dimensions

[1] Check motor shaft fit

[2] Min./Max. permissible motor shaft length. Longer motor shafts are possible, please contact alpha.

[3] The dimensions depend on the motor

[4] Smaller motor shaft diameter is compensated by a bushing with a minimum thickness of 1 mm

[5] Standard clamping hub diameter

			2-stage									
Ratio	i		**16**	**20**	**21**	**25**	**28**	**31**	**32**	**35**	**40**	**50**
Max. torque [a) b)]	T_{2a}	*Nm*	825	825	660	825	825	682	825	825	825	825
		in.lb	7302	7302	5842	7302	7302	6036	7302	7302	7302	7302
Max. acceleration torque [b)] (max. 1000 cycles per hour)	T_{2B}	*Nm*	825	825	660	825	825	682	825	825	825	825
		in.lb	7302	7302	5842	7302	7302	6036	7302	7302	7302	7302
Nominal torque (at n_{1N})	T_{2N}	*Nm*	461	493	393	489	545	431	464	541	607	585
		in.lb	4078	4361	2476	4332	4824	3812	4104	4792	5370	5179
Emergency stop torque [a) b)] (permitted 1000 times during the service life of the gearbox)	T_{2Not}	*Nm*	1250	1250	1250	1250	1250	1250	1250	1250	1250	1250
		in.lb	11064	11064	11064	11064	11064	11064	11064	11064	11064	11064
Permitted average input speed (at T_{2N} and 20 °C ambient temperature) [d)]	n_{1N}	*rpm*	2900	2900	2900	2900	2900	2900	2900	2900	2900	3200
Max. input speed	n_{1Max}	*rpm*	6250	6250	6250	6250	6250	6250	6250	6250	6250	6250
Mean no load running torque [b)] (at n_1 = 3000 rpm and 20 °C gearbox temperature)	T_{012}	*Nm*	2.8	2.4	2.2	2.6	2.0	1.9	2.0	1.5	1.5	1.2
		in.lb	25	22	20	23	17	17	17	14	13	11
Max. backlash	j_t	*arcmin*	Standard ≤ 3 / Reduced ≤ 1									
Torsional rigidity [b)]	C_{t21}	*Nm/arcmin*	180	185	145	180	180	130	180	175	175	175
		in.lb/arcmin	1593	1637	1283	1593	1593	1151	1593	1549	1549	1549
Tilting rigidity	C_{2K}	*Nm/arcmin*	560									
		in.lb/arcmin	4956									
Max. axial force [c)]	F_{2AMax}	*N*	6130									
		lb_f	1379									
Max. tilting moment	M_{2KMax}	*Nm*	1379									
		in.lb	11816									
Efficiency at full load	η	%	94									
Service life	L_h	*h*	> 20000									
Weight (incl. standard adapter plate)	m	*kg*	14.1									
		lb_m	31.2									
Operating noise (at reference ratio and reference speed – ratio-specific values available in cymex®)	L_{PA}	*dB(A)*	≤ 58									
Max. permitted housing temperature		*°C*	+90									
		F	194									
Ambient temperature		*°C*	–15 to +40									
		F	5 to 104									
Lubrication			Lubricated for life									
Direction of rotation			In- and output same direction									
Protection class			IP 65									
Metal bellows coupling (recommended product type – validate sizing with cymex®)			-									
Bore diameter of coupling on the application side		*mm*	-									
Mass moment of inertia (relates to the drive) **E 19**	J_1	$kgcm^2$	2.53	2.08	2.30	2.01	1.67	2.12	1.67	1.64	1.44	1.42
		10^{-3} $in.lb.s^2$	2.24	1.84	2.04	1.78	1.48	1.88	1.48	1.45	1.27	1.26
G 24	J_1	$kgcm^2$	3.22	2.77	2.99	2.70	2.37	2.81	2.37	2.33	2.13	2.12
		10^{-3} $in.lb.s^2$	2.85	2.45	2.65	2.39	2.10	2.49	2.10	2.06	1.89	1.88
K 38	J_1	$kgcm^2$	10.3	9.83	10.1	9.77	9.43	9.88	9.43	9.40	9.20	9.18
		10^{-3} $in.lb.s^2$	9.12	8.70	8.94	8.65	8.35	8.74	8.35	8.32	8.14	8.12

Clamping hub diameter [mm]

Optimized mass inertia version available on request

Please use our sizing software cymex® for a detailed sizing – **www.wittenstein-cymex.com**

a) At max. 10 % M_{2KMax}
b) Valid for standard clamping hub diameter
c) Refers to center of the output shaft or flange
d) Please reduce input speed at higher ambient temperatures

View A | View B

2-stage

Motor shaft diameter [mm]

up to 19 [4] (E) clamping hub diameter

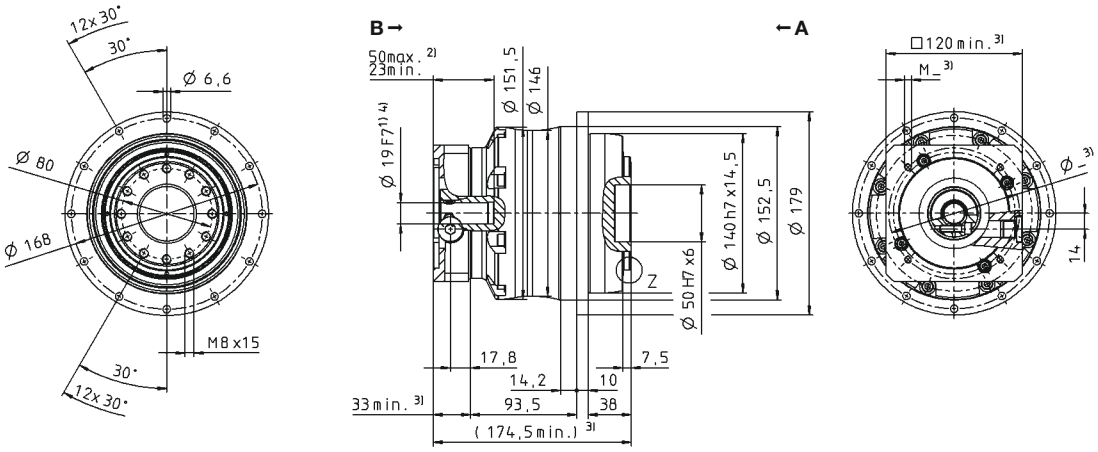

up to 24 [4] (G) [5] clamping hub diameter

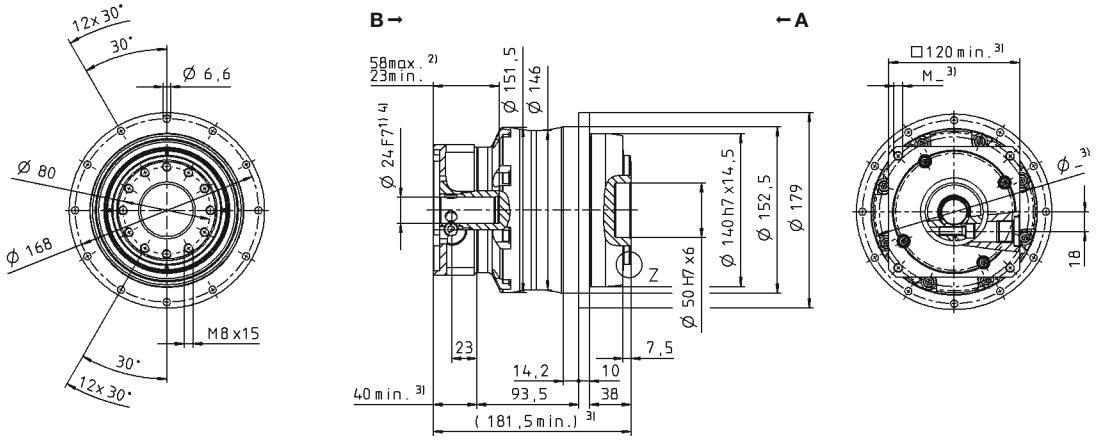

up to 38 [4] (K) clamping hub diameter

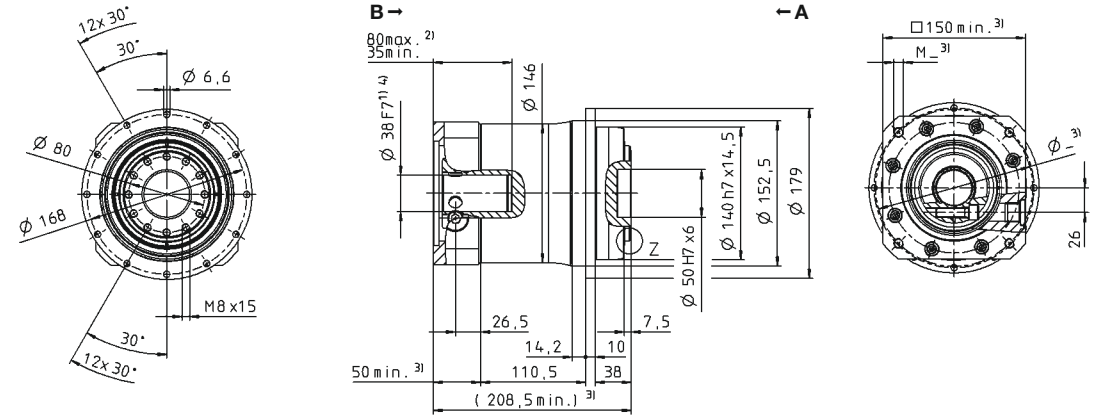

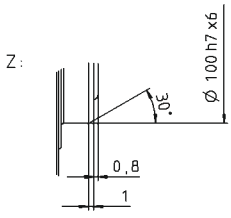

Non-tolerated dimensions are nominal dimensions

[1] Check motor shaft fit

[2] Min./Max. permissible motor shaft length. Longer motor shafts are possible, please contact alpha.

[3] The dimensions depend on the motor

[4] Smaller motor shaft diameter is compensated by a bushing with a minimum thickness of 1 mm

[5] Standard clamping hub diameter

DP+ 010 MA 2-stage

				2-stage			
Ratio			i	**22**	**27.5**	**38.5**	**55**
Max. torque [a) b)]			T_{2a}	Nm	315	315	315	315
				in.lb	2788	2788	2788	2788
Max. acceleration torque [b)] (max. 1000 cycles per hour)			T_{2B}	Nm	230	230	230	230
				in.lb	2036	2036	2036	2036
Nominal torque (at n_{1N})			T_{2N}	Nm	140	137	139	147
				in.lb	1242	1213	1230	1303
Emergency stop torque [a) b)] (permitted 1000 times during the service life of the gearbox)			T_{2Not}	Nm	525	525	525	525
				in.lb	4647	4647	4647	4647
Permitted average input speed (at T_{2N} and 20 °C ambient temperature) [d)]			n_{1N}	rpm	4000	4000	4000	4000
Max. input speed			n_{1Max}	rpm	7500	7500	7500	7500
Mean no load running torque [b)] (at n_1 = 3000 rpm and 20 °C gearbox temperature)			T_{012}	Nm	0.52	0.47	0.38	0.38
				in.lb	4.6	4.2	3.4	3.4
Max. backlash			j_t	arcmin	≤ 1			
Torsional rigidity [b)]			C_{t21}	Nm/arcmin	43	43	43	42
				in.lb/arcmin	381	381	381	372
Tilting rigidity			C_{2K}	Nm/arcmin	225			
				in.lb/arcmin	1991			
Max. axial force [c)]			F_{2AMax}	N	2795			
				lb_f	629			
Max. tilting moment			M_{2KMax}	Nm	400			
				in.lb	3540			
Efficiency at full load			η	%	94			
Service life			L_h	h	> 20000			
Weight (incl. standard adapter plate)			m	kg	3.2			
				lb_m	7.1			
Operating noise (at reference ratio and reference speed – ratio-specific values available in cymex®)			L_{PA}	dB(A)	≤ 56			
Max. permitted housing temperature				°C	+90			
				F	194			
Ambient temperature				°C	–15 to +40			
				F	5 to 104			
Lubrication					Lubricated for life			
Direction of rotation					In- and output same direction			
Protection class					IP 65			
Metal bellows coupling (recommended product type – validate sizing with cymex®)					-			
Bore diameter of coupling on the application side				mm	-			
Mass moment of inertia (relates to the drive)	C	14	J_1	$kgcm^2$	0.21	0.18	0.16	0.14
				10^{-3} in.lb.s²	0.19	0.16	0.14	0.12
Clamping hub diameter [mm]								
Optimized mass inertia version available on request	E	19	J_1	$kgcm^2$	0.52	0.50	0.47	0.46
				10^{-3} in.lb.s²	0.46	0.44	0.42	0.41

Please use our sizing software cymex® for a detailed sizing – **www.wittenstein-cymex.com**

[a)] At max. 10 % M_{2KMax}
[b)] Valid for standard clamping hub diameter
[c)] Refers to center of the output shaft or flange
[d)] Please reduce input speed at higher ambient temperatures

View A | View B

2-stage

Motor shaft diameter [mm]

up to 14 [4] (C) [5] clamping hub diameter

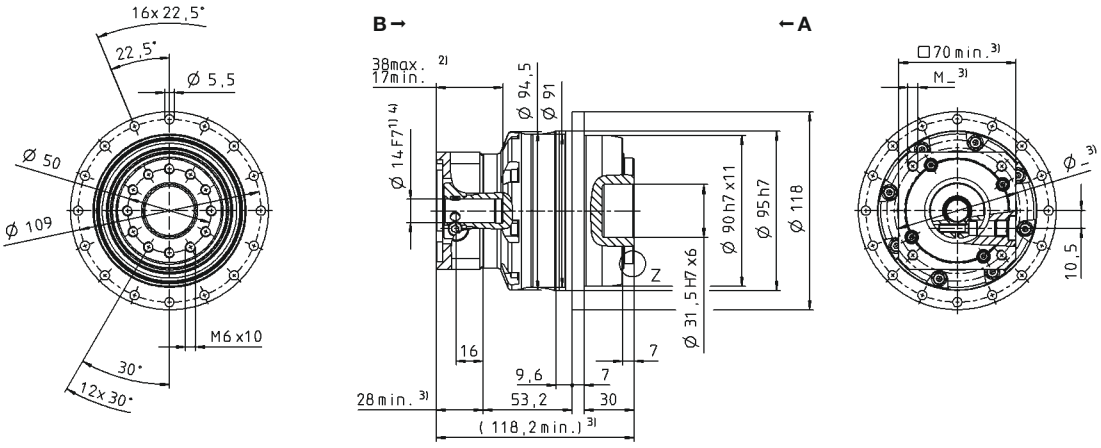

up to 19 [4] (E) clamping hub diameter

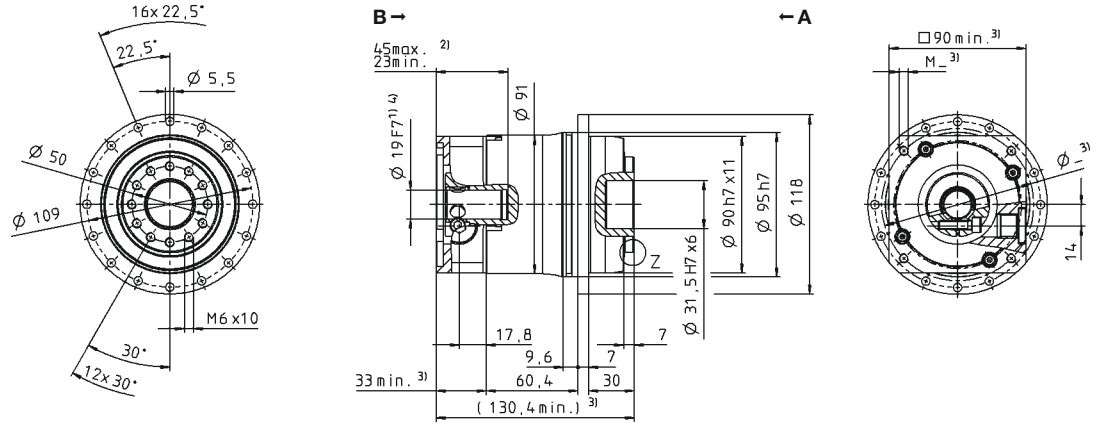

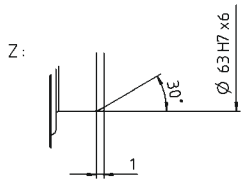

Non-tolerated dimensions are nominal dimensions

1) Check motor shaft fit
2) Min./Max. permissible motor shaft length. Longer motor shafts are possible, please contact alpha.
3) The dimensions depend on the motor
4) Smaller motor shaft diameter is compensated by a bushing with a minimum thickness of 1 mm
5) Standard clamping hub diameter

DP+ 025 MA 2-stage

				2-stage			
Ratio			i	**22**	**27.5**	**38.5**	**55**
Max. torque [a) b)]			T_{2a}	*Nm*	583	583	583	583
				in.lb	5160	5160	5160	5160
Max. acceleration torque [b)] (max. 1000 cycles per hour)			T_{2B}	*Nm*	530	530	530	530
				in.lb	4691	4691	4691	4691
Nominal torque (at n_{1N})			T_{2N}	*Nm*	312	314	371	413
				in.lb	2762	2775	3286	3652
Emergency stop torque [a) b)] (permitted 1000 times during the service life of the gearbox)			T_{2Not}	*Nm*	1200	1200	1200	1200
				in.lb	10621	10621	10621	10621
Permitted average input speed (at T_{2N} and 20 °C ambient temperature) [d)]			n_{1N}	*rpm*	3500	3500	3500	3500
Max. input speed			n_{1Max}	*rpm*	7500	7500	7500	7500
Mean no load running torque [b)] (at n_1 = 3000 rpm and 20 °C gearbox temperature)			T_{012}	*Nm*	1.0	0.87	0.78	0.70
				in.lb	9.2	7.7	6.9	6.2
Max. backlash			j_t	*arcmin*	≤ 1			
Torsional rigidity [b)]			C_{t21}	*Nm/arcmin*	105	105	105	100
				in.lb/arcmin	929	929	929	885
Tilting rigidity			C_{2K}	*Nm/arcmin*	550			
				in.lb/arcmin	4868			
Max. axial force [c)]			F_{2AMax}	*N*	4800			
				lb_f	1080			
Max. tilting moment			M_{2KMax}	*Nm*	550			
				in.lb	4868			
Efficiency at full load			η	%	94			
Service life			L_h	*h*	> 20000			
Weight (incl. standard adapter plate)			m	*kg*	5.6			
				lb_m	12.4			
Operating noise (at reference ratio and reference speed – ratio-specific values available in cymex®)			L_{PA}	*dB(A)*	≤ 58			
Max. permitted housing temperature				*°C*	+90			
				F	194			
Ambient temperature				*°C*	–15 to +40			
				F	5 to 104			
Lubrication					Lubricated for life			
Direction of rotation					In- and output same direction			
Protection class					IP 65			
Metal bellows coupling (recommended product type – validate sizing with cymex®)					-			
Bore diameter of coupling on the application side				*mm*	-			
Mass moment of inertia (relates to the drive)	E	19	J_1	*kgcm²*	0.87	0.70	0.60	0.55
				10^{-3} in.lb.s²	0.77	0.62	0.53	0.49
Clamping hub diameter [mm]	G	24	J_1	*kgcm²*	2.39	2.22	2.12	2.07
Optimized mass inertia version available on request				*10^{-3} in.lb.s²*	2.12	1.96	1.88	1.83

Please use our sizing software cymex® for a detailed sizing – **www.wittenstein-cymex.com**

[a)] At max. 10 % M_{2KMax}
[b)] Valid for standard clamping hub diameter
[c)] Refers to center of the output shaft or flange
[d)] Please reduce input speed at higher ambient temperatures

View A | View B

2-stage

Motor shaft diameter [mm]

up to 19 [4] (E) [5] clamping hub diameter

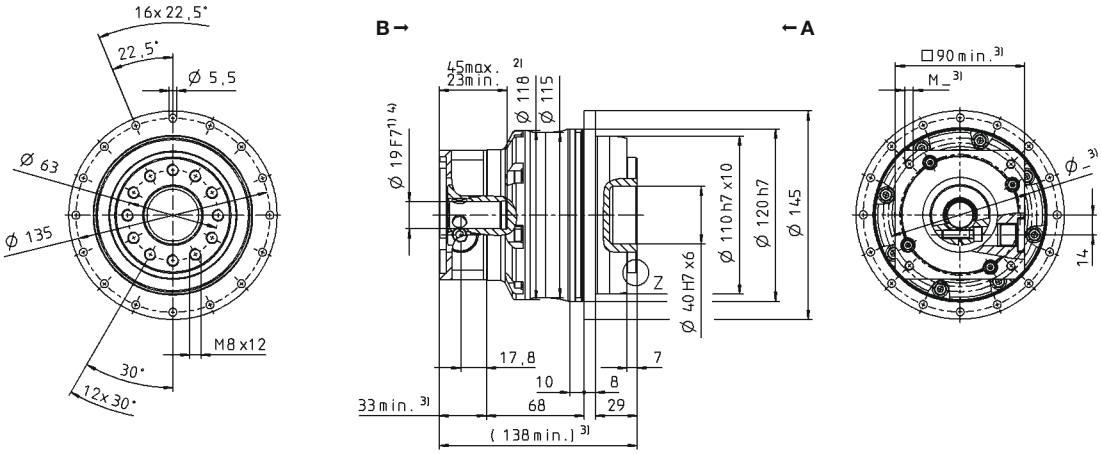

up to 24 [4] (G) clamping hub diameter

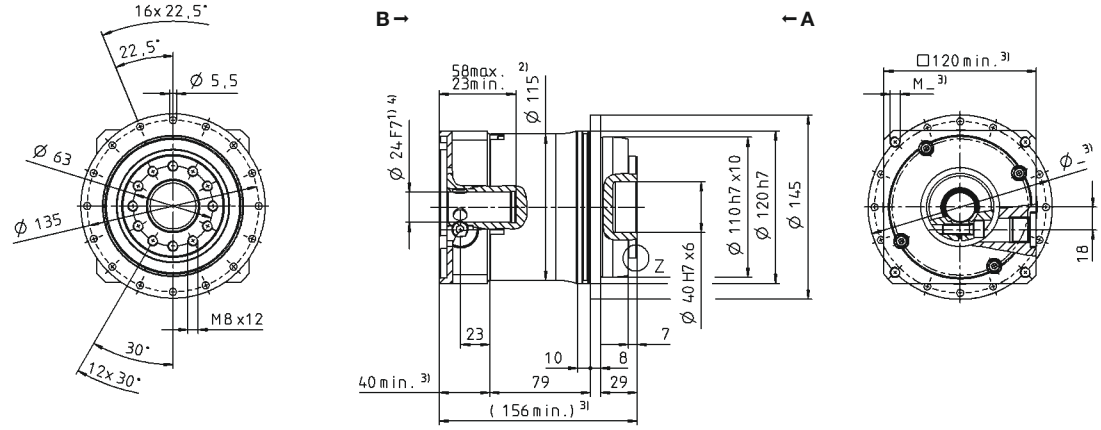

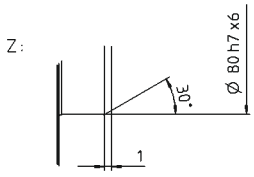

Non-tolerated dimensions are nominal dimensions

1) Check motor shaft fit
2) Min./Max. permissible motor shaft length. Longer motor shafts are possible, please contact alpha.
3) The dimensions depend on the motor
4) Smaller motor shaft diameter is compensated by a bushing with a minimum thickness of 1 mm
5) Standard clamping hub diameter

DP+ 050 MA 2-stage

				2-stage			
Ratio		i		**22**	**27.5**	**38.5**	**55**
Max. torque [a) b)]		T_{2a}	*Nm*	1402	1402	1402	1402
			in.lb	12406	12406	12406	12406
Max. acceleration torque [b)] (max. 1000 cycles per hour)		T_{2B}	*Nm*	992	992	992	992
			in.lb	8780	8780	8780	8780
Nominal torque (at n_{1N})		T_{2N}	*Nm*	523	566	638	717
			in.lb	4632	5005	5649	6348
Emergency stop torque [a) b)] (permitted 1000 times during the service life of the gearbox)		T_{2Not}	*Nm*	2375	2375	2375	2375
			in.lb	21021	21021	21021	21021
Permitted average input speed (at T_{2N} and 20 °C ambient temperature) [d)]		n_{1N}	*rpm*	3000	3000	3000	3000
Max. input speed		n_{1Max}	*rpm*	6250	6250	6250	6250
Mean no load running torque [b)] (at n_1 = 3000 rpm and 20 °C gearbox temperature)		T_{012}	*Nm*	2.7	2.4	2.1	1.7
			in.lb	23.9	21.2	18.9	15.0
Max. backlash		j_t	*arcmin*	≤ 1			
Torsional rigidity [b)]		C_{t21}	*Nm/arcmin*	220	220	220	220
			in.lb/arcmin	1947	1947	1947	1947
Tilting rigidity		C_{2K}	*Nm/arcmin*	560			
			in.lb/arcmin	4956			
Max. axial force [c)]		F_{2AMax}	*N*	6130			
			lb_f	1379			
Max. tilting moment		M_{2KMax}	*Nm*	1335			
			in.lb	11816			
Efficiency at full load		η	%	94			
Service life		L_h	*h*	> 20000			
Weight (incl. standard adapter plate)		m	*kg*	12.5			
			lb_m	27.6			
Operating noise (at reference ratio and reference speed – ratio-specific values available in cymex®)		L_{PA}	*dB(A)*	≤ 60			
Max. permitted housing temperature			*°C*	+90			
			F	194			
Ambient temperature			*°C*	–15 to +40			
			F	5 to 104			
Lubrication				Lubricated for life			
Direction of rotation				In- and output same direction			
Protection class				IP 65			
Metal bellows coupling (recommended product type – validate sizing with cymex®)				-			
Bore diameter of coupling on the application side			*mm*	-			
Mass moment of inertia (relates to the drive)	G 24	J_1	$kgcm^2$	3.80	3.33	3.00	2.80
			10^{-3} $in.lb.s^2$	3.36	2.95	2.66	2.48
Clamping hub diameter [mm]							
Optimized mass inertia version available on request	K 38	J_1	$kgcm^2$	10.7	10.3	9.90	9.70
			10^{-3} $in.lb.s^2$	9.47	9.12	8.76	8.58

Please use our sizing software cymex® for a detailed sizing – **www.wittenstein-cymex.com**

[a)] At max. 10 % M_{2KMax}
[b)] Valid for standard clamping hub diameter
[c)] Refers to center of the output shaft or flange
[d)] Please reduce input speed at higher ambient temperatures

View A | View B

2-stage

Motor shaft diameter [mm]

up to 24 [4] (G)[5] clamping hub diameter

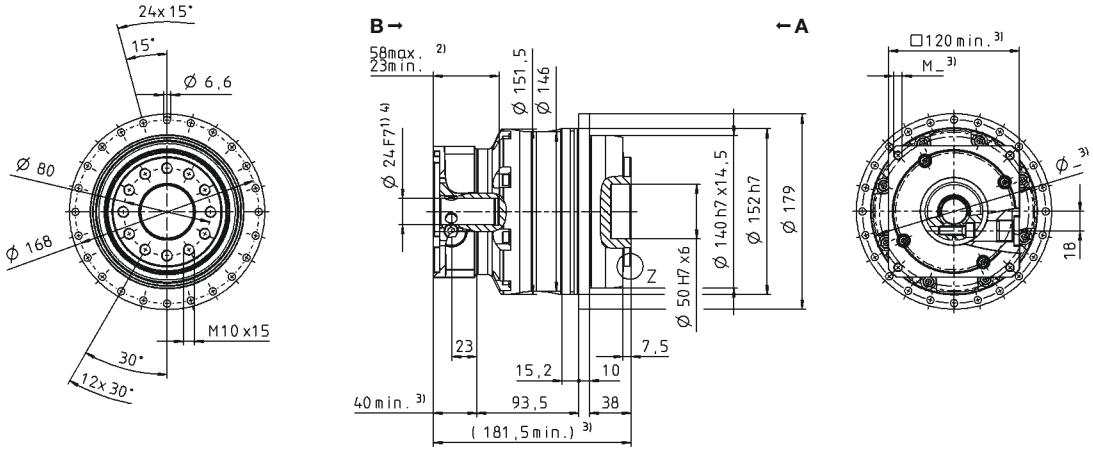

up to 38 [4] (K) clamping hub diameter

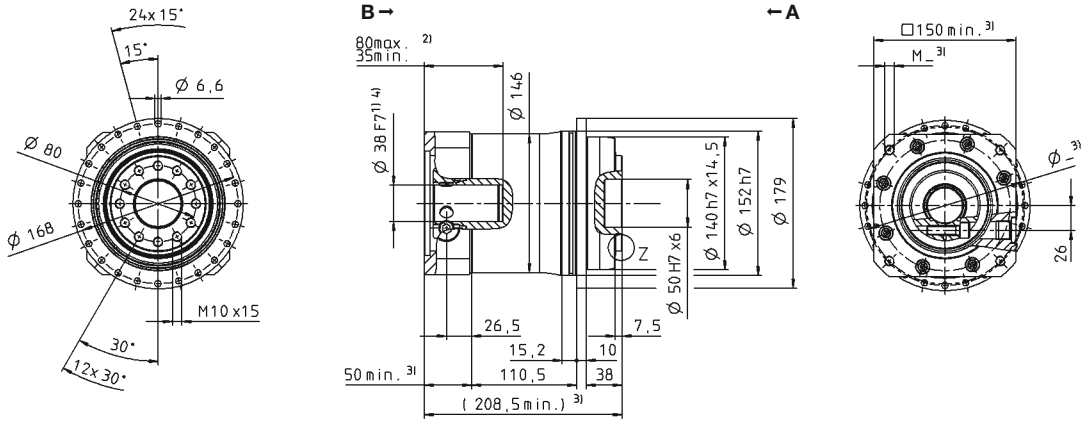

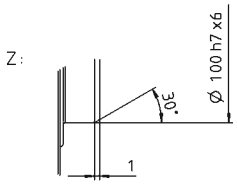

Non-tolerated dimensions are nominal dimensions

1) Check motor shaft fit
2) Min./Max. permissible motor shaft length. Longer motor shafts are possible, please contact alpha.
3) The dimensions depend on the motor
4) Smaller motor shaft diameter is compensated by a bushing with a minimum thickness of 1 mm
5) Standard clamping hub diameter

HDP+ – Cleanliness guaranteed

HDP+

Sterile, highly dynamic and outstanding positioning accuracy – the HDP+ meets the strict hygiene requirements of production and packaging facilities. The gearbox in hygienic design not only offers you maximum safety against contamination-related product and process risks, but also guarantees maximum system availability and productivity.

Product highlights

Positioning accuracy: Minimal backlash and extreme torsional rigidity ensure maximum positioning accuracy

New freedom in design through direct process integration

Resistance: Resistant against chemical cleaning agents and disinfectants

Cleaning: Fast, efficient and safe cleaning, also suitable for CIP processes

Consistently high performance: Constant backlash throughout the service life of the gearbox ensures a consistently high performance

Max. achievable leak tightness: IP69X (max. 30 bar)

HDP+ is setting new industrial standards in hygienic design

Benefits for system manufacturers

- Integration in a system constructed according to Hygiene Design requirements (certification available)
- Meets legal obligations (machinery directive, food hygiene regulation)
- Reduction of individual parts simplifies production / assembly and allows a more compact machine design
- Greater overall system effectiveness
- Competitive advantage through innovation

Benefits for operators

- Easier, faster cleaning: shorter CIP / SIP times
- Improved reliability and longer life
- Quick and easy disassembly
- Reduced consumption of cleaning materials
- Minimal costs for maintenance and repair
- Cost savings: competitive advantage and lower end user price
- Increased food safety

Used for fish processing

Used for filling and packing milk products

More information on hygienic design solutions: Simply scan the QR code with your smartphone.

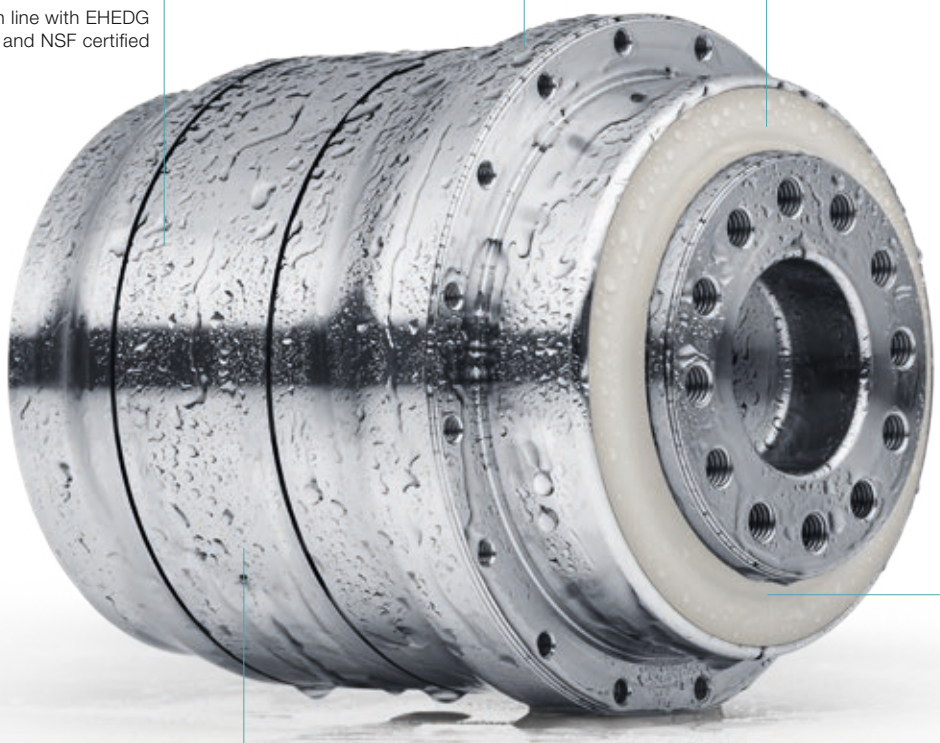

Used for portioning meat products

The high-precision HDP⁺ is ideal for Delta robotics applications

HDP+ 010 MA 2-stage

				2-stage			
Ratio			i	**22**	**27.5**	**38.5**	**55**
Max. torque [a) b)]			T_{2a}	Nm	252	252	252	252
				in.lb	2230	2230	2230	2230
Max. acceleration torque [b)] (max. 1000 cycles per hour)			T_{2B}	Nm	185	185	185	185
				in.lb	1637	1637	1637	1637
Nominal torque (at n_{1N})			T_{2N}	Nm	140	137	139	147
				in.lb	1242	1213	1230	1303
Emergency stop torque [a) b)] (permitted 1000 times during the service life of the gearbox)			T_{2Not}	Nm	525	525	525	525
				in.lb	4647	4647	4647	4647
Permitted average input speed (at T_{2N} and 20 °C ambient temperature) [d)]			n_{1N}	rpm	4000	4000	4000	4000
Max. input speed			n_{1Max}	rpm	7500	7500	7500	7500
Mean no load running torque [b)] (at n_1 = 3000 rpm and 20 °C gearbox temperature)			T_{012}	Nm	0.52	0.47	0.38	0.38
				in.lb	4.6	4.2	3.4	3.4
Max. backlash			j_t	arcmin	≤ 1			
Torsional rigidity [b)]			C_{t21}	Nm/arcmin	43	43	43	42
				in.lb/arcmin	381	381	381	372
Tilting rigidity			C_{2K}	Nm/arcmin	225			
				in.lb/arcmin	1991			
Max. axial force [c)]			F_{2AMax}	N	2795			
				lb_f	629			
Max. tilting moment			M_{2KMax}	Nm	400			
				in.lb	3540			
Efficiency at full load			η	%	94			
Service life			L_h	h	> 20000			
Weight (incl. standard adapter plate)			m	kg	7.3			
				lb_m	16.1			
Operating noise (at reference ratio and reference speed – ratio-specific values available in cymex®)			L_{PA}	dB(A)	≤ 56			
Max. permitted housing temperature				°C	+90			
				F	194			
Ambient temperature				°C	–15 to +40			
				F	5 to 104			
Lubrication					Lubricated for life			
Direction of rotation					In- and output same direction			
Protection class					IP 69X			
Metal bellows coupling (recommended product type – validate sizing with cymex®)					-			
Bore diameter of coupling on the application side				mm	-			
Mass moment of inertia (relates to the drive)	C	14	J_1	$kgcm^2$	0.21	0.18	0.16	0.14
				10^{-3} in.lb.s²	0.19	0.16	0.14	0.12
Clamping hub diameter [mm]								
Optimized mass inertia version available on request	E	19	J_1	$kgcm^2$	0.52	0.50	0.47	0.46
				10^{-3} in.lb.s²	0.46	0.44	0.42	0.41

Please use our sizing software cymex® for a detailed sizing – **www.wittenstein-cymex.com**

[a)] At max. 10 % M_{2KMax}
[b)] Valid for standard clamping hub diameter
[c)] Refers to center of the output shaft or flange
[d)] Please reduce input speed at higher ambient temperatures

View A | View B

2-stage

Motor shaft diameter [mm]

up to 14 [4] (C) [5] clamping hub diameter

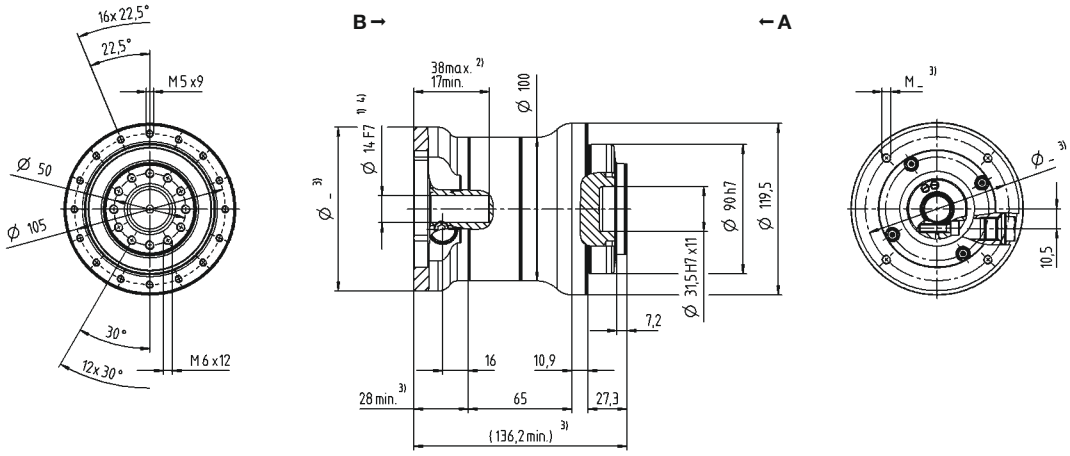

up to 19 [4] (E) clamping hub diameter

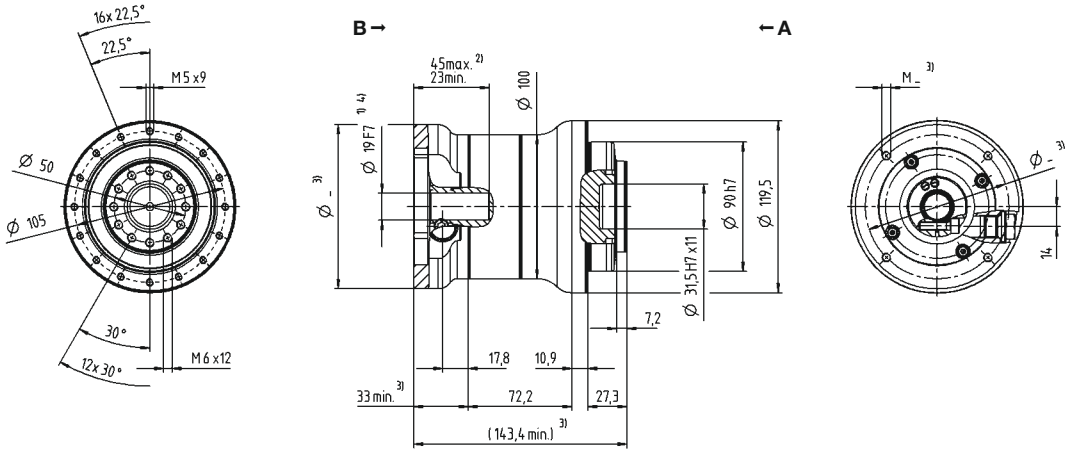

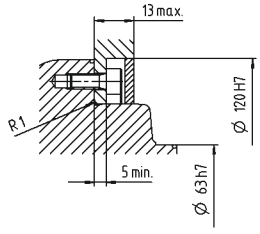

Mounting accessories:
Mounting kit comprising seals and O-rings available as an option.

Non-tolerated dimensions are nominal dimensions
1) Check motor shaft fit
2) Min. / Max. permissible motor shaft length. Longer motor shafts are possible, please contact alpha.
3) The dimensions depend on the motor
4) Smaller motor shaft diameter is compensated by a bushing with a minimum thickness of 1 mm
5) Standard clamping hub diameter

HDP+ 025 MA 2-stage

				2-stage			
Ratio		i		**22**	**27.5**	**38.5**	**55**
Max. torque [a) b)]		T_{2a}	*Nm*	466	466	466	466
			in.lb	4128	4128	4128	4128
Max. acceleration torque [b)] (max. 1000 cycles per hour)		T_{2B}	*Nm*	425	425	425	425
			in.lb	3762	3762	3762	3762
Nominal torque (at n_{1N})		T_{2N}	*Nm*	312	314	371	413
			in.lb	2762	2775	3286	3652
Emergency stop torque [a) b)] (permitted 1000 times during the service life of the gearbox)		T_{2Not}	*Nm*	1200	1200	1200	1200
			in.lb	10621	10621	10621	10621
Permitted average input speed (at T_{2N} and 20 °C ambient temperature) [d)]		n_{1N}	*rpm*	3500	3500	3500	3500
Max. input speed		n_{1Max}	*rpm*	7500	7500	7500	7500
Mean no load running torque [b)] (at n_1 = 3000 rpm and 20 °C gearbox temperature)		T_{012}	*Nm*	1.0	0.87	0.78	0.70
			in.lb	9.2	7.7	6.9	6.2
Max. backlash		j_t	*arcmin*	≤ 1			
Torsional rigidity [b)]		C_{t21}	*Nm/arcmin*	100	100	100	100
			in.lb/arcmin	885	885	885	885
Tilting rigidity		C_{2K}	*Nm/arcmin*	550			
			in.lb/arcmin	4868			
Max. axial force [c)]		F_{2AMax}	*N*	4800			
			lb_f	1080			
Max. tilting moment		M_{2KMax}	*Nm*	550			
			in.lb	4868			
Efficiency at full load		η	%	94			
Service life		L_h	*h*	> 20000			
Weight (incl. standard adapter plate)		m	*kg*	11.1			
			lb_m	24.5			
Operating noise (at reference ratio and reference speed – ratio-specific values available in cymex®)		L_{PA}	*dB(A)*	≤ 58			
Max. permitted housing temperature			*°C*	+90			
			F	194			
Ambient temperature			*°C*	–15 to +40			
			F	5 to 104			
Lubrication				Lubricated for life			
Direction of rotation				In- and output same direction			
Protection class				IP 69X			
Metal bellows coupling (recommended product type – validate sizing with cymex®)				-			
Bore diameter of coupling on the application side			*mm*	-			
Mass moment of inertia (relates to the drive)	E 19	J_1	$kgcm^2$	0.87	0.70	0.60	0.55
			10^{-3} $in.lb.s^2$	0.77	0.62	0.53	0.49
Clamping hub diameter [mm]	G 24	J_1	$kgcm^2$	2.39	2.22	2.12	2.07
Optimized mass inertia version available on request			10^{-3} $in.lb.s^2$	2.12	1.96	1.88	1.83

Please use our sizing software cymex® for a detailed sizing – **www.wittenstein-cymex.com**

[a)] At max. 10 % M_{2KMax}
[b)] Valid for standard clamping hub diameter
[c)] Refers to center of the output shaft or flange
[d)] Please reduce input speed at higher ambient temperatures

View A View B

2-stage

Motor shaft diameter [mm]

up to 19 [4] (E) [5] clamping hub diameter

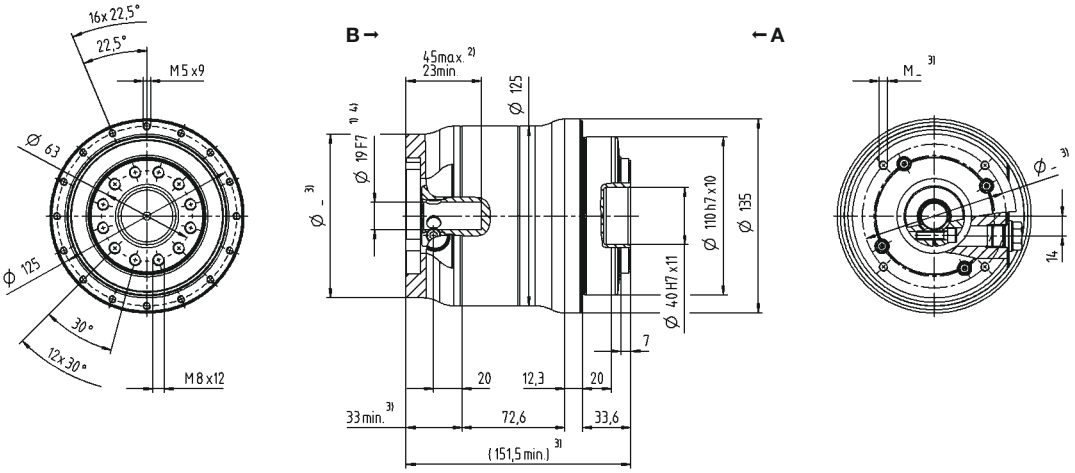

up to 24 [4] (G) clamping hub diameter

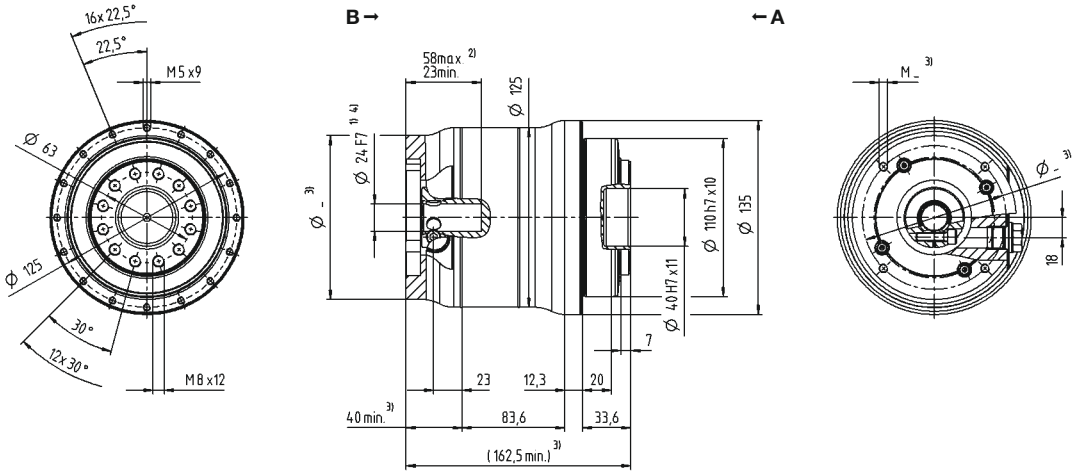

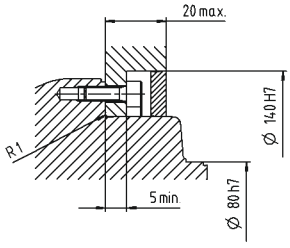

Mounting accessories:
Mounting kit comprising seals and O-rings available as an option.

Application-spec. solutions

HDP+

Non-tolerated dimensions are nominal dimensions
[1] Check motor shaft fit
[2] Min. / Max. permissible motor shaft length. Longer motor shafts are possible, please contact alpha.
[3] The dimensions depend on the motor
[4] Smaller motor shaft diameter is compensated by a bushing with a minimum thickness of 1 mm
[5] Standard clamping hub diameter

HDP+ 050 MA 2-stage

				2-stage			
Ratio		i		**22**	**27.5**	**38.5**	**55**
Max. torque [a) b)]		T_{2a}	*Nm*	1121	1121	1121	1121
			in.lb	9925	9925	9925	9925
Max. acceleration torque [b)] (max. 1000 cycles per hour)		T_{2B}	*Nm*	795	795	795	795
			in.lb	7036	7036	7036	7036
Nominal torque (at n_{1N})		T_{2N}	*Nm*	523	566	638	717
			in.lb	4632	5005	5649	6348
Emergency stop torque [a) b)] (permitted 1000 times during the service life of the gearbox)		T_{2Not}	*Nm*	2375	2375	2375	2375
			in.lb	21021	21021	21021	21021
Permitted average input speed (at T_{2N} and 20 °C ambient temperature) [d)]		n_{1N}	*rpm*	3000	3000	3000	3000
Max. input speed		n_{1Max}	*rpm*	6250	6250	6250	6250
Mean no load running torque [b)] (at n_1 = 3000 rpm and 20 °C gearbox temperature)		T_{012}	*Nm*	2.7	2.4	2.1	1.7
			in.lb	23.9	21.2	18.9	15.0
Max. backlash		j_t	*arcmin*	≤ 1			
Torsional rigidity [b)]		C_{t21}	*Nm/arcmin*	210	210	210	210
			in.lb/arcmin	1859	1859	1859	1859
Tilting rigidity		C_{2K}	*Nm/arcmin*	560			
			in.lb/arcmin	4956			
Max. axial force [c)]		F_{2AMax}	*N*	6130			
			lb_f	1379			
Max. tilting moment		M_{2KMax}	*Nm*	1335			
			in.lb	11816			
Efficiency at full load		η	%	94			
Service life		L_h	*h*	> 20000			
Weight (incl. standard adapter plate)		m	*kg*	21.9			
			lb_m	48.4			
Operating noise (at reference ratio and reference speed – ratio-specific values available in cymex®)		L_{PA}	*dB(A)*	≤ 60			
Max. permitted housing temperature			*°C*	+90			
			F	194			
Ambient temperature			*°C*	–15 to +40			
			F	5 to 104			
Lubrication				Lubricated for life			
Direction of rotation				In- and output same direction			
Protection class				IP 69X			
Metal bellows coupling (recommended product type – validate sizing with cymex®)				-			
Bore diameter of coupling on the application side			*mm*	-			
Mass moment of inertia (relates to the drive)	G 24	J_1	$kgcm^2$	3.80	3.33	3.00	2.80
			10^{-3} $in.lb.s^2$	3.36	2.95	2.66	2.48
Clamping hub diameter [mm]							
Optimized mass inertia version available on request	K 38	J_1	$kgcm^2$	10.7	10.3	9.90	9.70
			10^{-3} $in.lb.s^2$	9.47	9.12	8.76	8.58

Please use our sizing software cymex® for a detailed sizing – **www.wittenstein-cymex.com**

[a)] At max. 10 % M_{2KMax}
[b)] Valid for standard clamping hub diameter
[c)] Refers to center of the output shaft or flange
[d)] Please reduce input speed at higher ambient temperatures

View A | View B

2-stage

Motor shaft diameter [mm]

up to 24 [4] (G)[5] clamping hub diameter

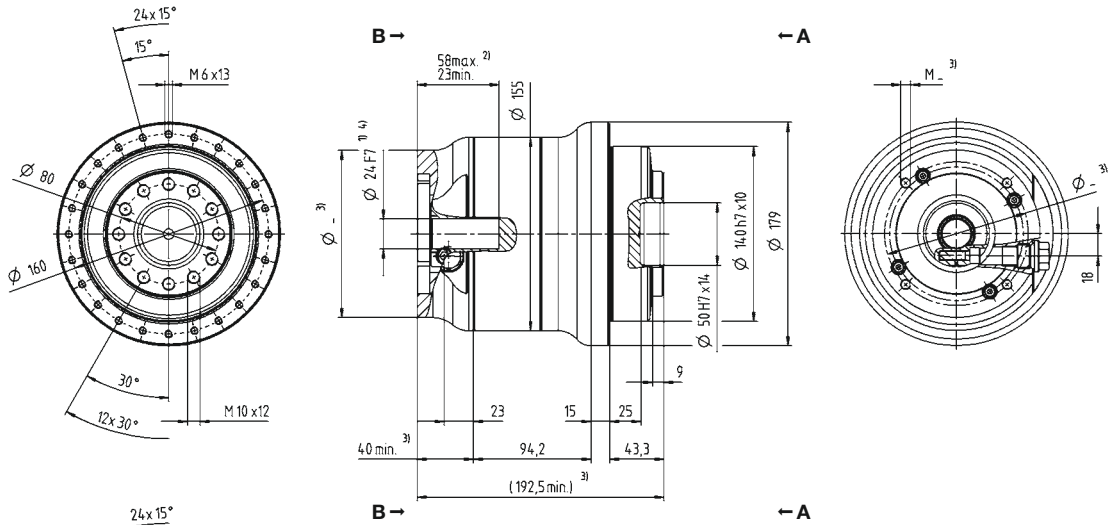

up to 38 [4] (K) clamping hub diameter

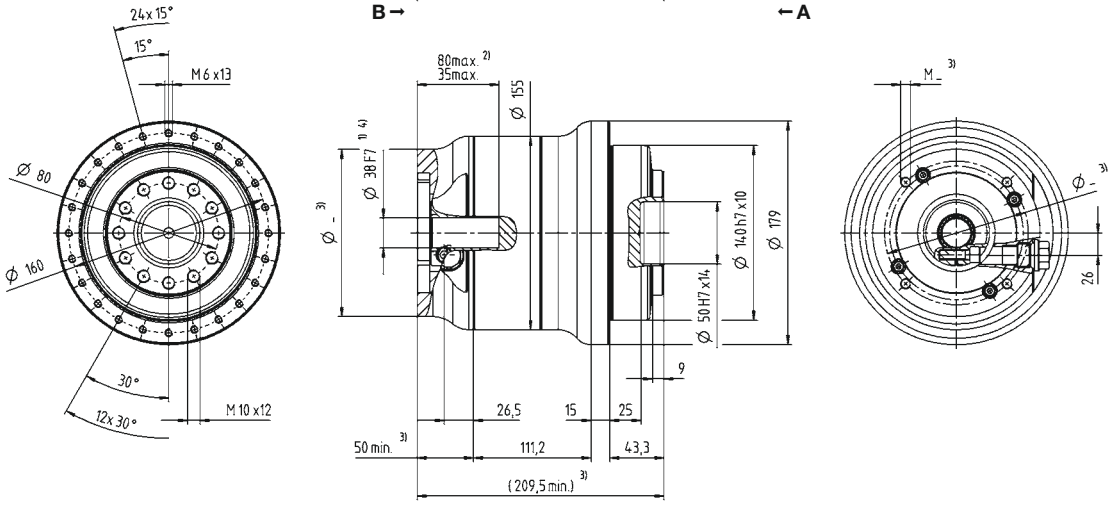

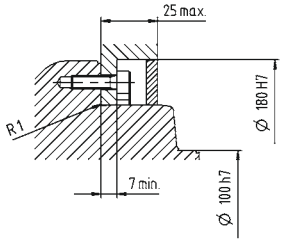

Mounting accessories:
Mounting kit comprising seals and O-rings available as an option.

Non-tolerated dimensions are nominal dimensions

1) Check motor shaft fit
2) Min. / Max. permissible motor shaft length. Longer motor shafts are possible, please contact alpha.
3) The dimensions depend on the motor
4) Smaller motor shaft diameter is compensated by a bushing with a minimum thickness of 1 mm
5) Standard clamping hub diameter

Basic Line gearbox overview

Product type		CP	CPS	CPK	CPSK	CVH	CVS
Gearbox model		MF	MF	MF	MF	MF / MT	MF / MT
Ratio [c]	min. *i* =	3	3	3	3	7	7
	max. *i* =	100	100	100	100	40	40
Max. torsional backlash [arcmin] [c]	Standard	≤ 12	≤ 12	≤ 14	≤ 14	≤ 15	≤ 15
	Reduced	–	–	–	–	–	–
Output shape							
Smooth shaft		x	x	x	x	–	x
Shaft with key [a]		x	x	x	x	–	x
Splined shaft (DIN 5480)		–	–	–	–	–	–
Blind hollow shaft		–	–	–	–	–	–
Hollow shaft interface		–	–	–	–	x	–
Keyed hollow shaft		–	–	–	–	x	–
Flanged hollow shaft		–	–	–	–	–	–
Flange		–	–	–	–	–	–
System output		–	–	–	–	–	–
Output on both sides		–	–	–	–	x	x
Input type							
Motor-mounted		x	x	x	x	x	x
Self-contained version		–	–	–	–	–	–
Characteristic							
Flange with slotted holes		–	–	–	–	–	–
ATEX [a]		–	–	–	–	–	–
Food-grade lubrication [a] [b]		x	x	x	x	x	x
Corrosion resistant [a] [b]		–	–	–	–	–	–
Optimized mass inertia [a]		–	–	–	–	–	–
System solutions							
Linear system (rack / pinion)		–	–	–	–	–	–
Actuator		–	–	–	–	–	–
Accessories (please refer to the product pages for further options)							
Coupling		x	x	x	x	x	x
Shrink disc		–	–	–	–	–	–
Mounting ring		–	–	–	–	–	–

[a] Power reduction: technical data available on request
[b] Please contact WITTENSTEIN alpha
[c] In relation to reference sizes

Value Line gearbox overview

Product type		NP	NPL	NPS	NPT	NPR	NPK	NPLK	NPSK	NPTK	NPRK	NVH	NVS	HDV
Gearbox model		MF / MA	MF / MA	MF / MA	MF / MA	MF / MA	MF / MA	MF / MA	MF / MA	MF / MA	MF / MA	MF	MF	MF / MT
Ratio [c]	min. *i* =	3	3	3	3	3	3	3	3	3	3	4	4	4
	max. *i* =	100	100	100	100	100	100	100	100	100	100	400	400	100
Max. torsional backlash [arcmin] [c]	Standard	≤ 8	≤ 8	≤ 8	≤ 8	≤ 8	≤ 10	≤ 10	≤ 10	≤ 10	≤ 10	≤ 6	≤ 6	≤ 10
	Reduced	–	–	–	–	–	–	–	–	–	–	–	–	–
Output type														
Smooth shaft		x	x	x	–	x	x	x	x	–	x	–	x	x
Shaft with key [a]		x	x	x	–	x	x	x	x	–	x	–	x	x
Splined shaft (DIN 5480)		–	x	x	–	x	–	x	x	–	x	–	–	–
Blind hollow shaft		–	–	–	–	–	–	–	–	–	–	–	–	–
Hollow shaft interface		–	–	–	–	–	–	–	–	–	–	x	–	–
Keyed hollow shaft		–	–	–	–	–	–	–	–	–	–	x	–	–
Flanged hollow shaft		–	–	–	–	–	–	–	–	–	–	–	–	–
Flange		–	–	–	x	–	–	–	–	x	–	–	–	–
System output		–	–	–	–	–	–	–	–	–	–	–	–	–
Output on both sides		–	–	–	–	–	–	–	–	–	–	x	x	–
Input type														
Motor-mounted		x	x	x	x	x	x	x	x	x	x	x	x	x
Self-contained version		–	–	–	–	–	–	–	–	–	–	–	–	–
Characteristic														
Flange with slotted holes		–	–	–	–	x	–	–	–	–	x	–	–	–
ATEX [a]		–	–	–	–	–	–	–	–	–	–	–	–	–
Food-grade lubrication [a] [b]		x	x	x	x	x	x	x	x	x	x	x	x	x
Corrosion resistant [a] [b]		–	–	–	–	–	–	–	–	–	–	x	x	x
Optimized mass inertia [a]		–	–	–	–	–	–	–	–	–	–	–	–	–
System solutions														
Linear system (rack / pinion)		x	x	x	–	x	x	x	x	–	x	–	x	–
Actuator		–	–	–	–	–	–	–	–	–	–	–	–	–
Accessories (please refer to the product pages for further options)														
Coupling		x	x	x	x	x	x	x	x	x	x	x	x	–
Shrink disc		–	–	–	–	–	–	–	–	–	–	x	–	–
Mounting ring		–	–	–	–	–	–	–	–	–	–	–	–	–

[a] Power reduction: technical data available on request
[b] Please contact WITTENSTEIN alpha
[c] In relation to reference sizes

Advanced Line gearbox overview

Product type		SP+	SP+ HIGH SPEED	SP+ HIGH SPEED	TP+	TP+ HIGH TORQUE	HG+	SK+	SPK+
Gearbox model		MF	MC	MC-L	MF	MA	MF	MF	MF
Catalog page		26	26	26	80	80	128	140	150
Ratio [c]	min. i =	3	3	3	4	22	3	3	12
	max. i =	100	100	10	100	302.5	100	100	10000
Max. torsional backlash [arcmin] [c]	Standard	≤ 3	≤ 4	≤ 4	≤ 3	≤ 1	≤ 4	≤ 4	≤ 4
	Reduced	≤ 1	≤ 2	≤ 2	≤ 1	–	–	–	≤ 2
Output shape									
Smooth shaft		x	x	x	–	–	–	x	x
Shaft with key [a]		x	x	x	–	–	–	x	x
Splined shaft (DIN 5480)		x	x	x	–	–	–	x	x
Blind hollow shaft		x	x	x	–	–	–	–	x
Hollow shaft interface		–	–	–	–	–	x	–	–
Keyed hollow shaft		–	–	–	–	–	–	–	–
Flanged hollow shaft		–	–	–	–	–	–	–	–
Flange		–	–	–	x	x	–	–	–
System output		–	–	–	x	x	–	–	–
Output on both sides		–	–	–	–	–	x	x	x
Input type									
Motor-mounted		x	x	x	x	x	x	x	x
Self-contained version		x	–	–	x	–	–	–	–
Characteristic									
Flange with slotted holes		x	–	–	–	–	–	–	–
ATEX [a]		x	x	–	–	–	x	x	–
Food-grade lubrication [a] [b]		x	x	x	x	x	x	x	x
Corrosion resistant [a] [b]		x	x	x	x	x	x	x	x
Optimized mass inertia [a]		x	x	x	x	x	–	–	–
System solutions									
Linear system (rack / pinion)		x	x	–	x	x	–	x	x
Actuator		–	–	–	x	x	–	–	–
Accessories (please refer to the product pages for further options)									
Coupling		x	x	x	x	x	–	x	x
Shrink disc		x	x	x	–	–	x	–	x
Mounting ring		–	–	–	x	x	–	–	–

[a] Power reduction: technical data available on request
[b] Please contact WITTENSTEIN alpha
[c] In relation to reference sizes

TK+	TPK+	TPK+ HIGH TORQUE	SC+	SPC+	TPC+	VH+	VS+	VT+	DP+	HDP+
MF	MF	MA	MF	MF	MF	MF	MF	MF	MF / MA	MA
178	188	188	228	238	248	262	272	280	292	308
3	12	66	1	4	4	4	4	4	16	22
100	10000	5500	2	20	20	400	400	400	55	55
≤ 4	≤ 4	≤ 1.3	≤ 4	≤ 4	≤ 4	≤ 3	≤ 3	≤ 3	≤ 3	≤ 1
–	≤ 2	–	–	≤ 2	≤ 2	≤ 2	≤ 2	≤ 2	≤ 1	–
–	–	–	x	x	–	–	x	–	–	–
–	–	–	x	x	–	–	x	–	–	–
–	–	–	–	x	–	–	x	–	–	–
–	–	–	–	x	–	–	–	–	–	–
–	–	–	–	–	–	x	–	–	–	–
–	–	–	–	–	–	x	–	–	–	–
x	–	–	–	–	–	–	–	x	–	–
–	x	x	–	–	x	–	–	–	x	x
–	x	x	–	–	x	–	–	–	–	–
x	x	x	–	–	–	x	x	–	–	–
x	x	x	x	x	x	x	x	x	x	x
–	–	–	–	–	–	–	–	–	–	–
–	–	–	–	–	–	–	–	–	–	–
x	–	–	–	–	–	–	–	–	–	–
x	x	x	x	x	x	x	x	x	x	x
x	x	x	–	–	–	x	x	x	x	x
–	–	–	–	–	–	–	–	–	x	x
x	x	x	x	x	x	–	x	x	–	–
–	–	–	–	–	–	–	–	–	–	–
x	x	x	x	x	x	–	x	x	–	–
–	–	–	–	x	–	x	–	–	–	–
–	–	–	–	–	–	–	–	–	x	–

Premium Line gearbox overview

Product type		XP+	RP+	XPK+	RPK+	XPC+	RPC+
Gearbox model		MF / MC	MF / MA	MF	MF / MA	MF	MF / MA
Ratio [c]	min. *i* =	3	22	12	48	4	22
	max. *i* =	100	220	1000	5500	20	55
Max. torsional backlash [arcmin] [c]	Standard	≤ 3	≤ 1	≤ 4	≤ 1.3	≤ 4	≤ 1.3
	Reduced	≤ 1	–	≤ 2	–	≤ 2	–
Output shape							
Smooth shaft		x	–	x	–	x	–
Shaft with key [a]		x	–	x	–	x	–
Splined shaft (DIN 5480)		x	–	x	–	x	–
Blind hollow shaft		x	–	x	–	x	–
Hollow shaft interface		–	–	–	–	–	–
Keyed hollow shaft		–	–	–	–	–	–
Flanged hollow shaft		–	–	–	–	–	–
Flange		–	x	–	x	–	x
System output		x	x	x	x	x	x
Output on both sides		–	–	–	–	–	–
Input type							
Motor-mounted		x	x	x	x	x	x
Self-contained version		x	–	–	–	–	–
Characteristic							
Flange with slotted holes		x	x	x	x	x	x
ATEX [a]		–	–	–	–	–	–
Food-grade lubrication [a] [b]		x	x	x	x	x	x
Corrosion resistant [a] [b]		–	–	–	–	–	–
Optimized mass inertia [a]		x	x	–	–	–	–
System solutions							
Linear system (rack / pinion)		x	x	x	x	x	x
Actuator		x	x	–	–	–	–
Accessories (please refer to the product pages for further options)							
Coupling		x	–	x	–	x	–
Shrink disc		x	–	x	–	x	–
Mounting ring		–	–	–	–	–	–

[a] Power reduction: technical data available on request
[b] Please contact WITTENSTEIN alpha
[c] In relation to reference sizes

Overview of gearbox variants

S P | 100 | **S** – M F 1 – 10 – 0 G 1 – 2 S

Characteristic:
B = Modular output combination
C = Reverse centering
E = ATEX
F = Food grade lubrication
G = Grease
H = Food-grade grease
L = Friction optimized
R = Flange with slotted holes
S = Standard
W = Corrosion resistant

Explanation of variants deviating from the standard:

B = Modular output combination

An additional backward output type is available for hypoid gearboxes. See page 353 for details.

C = Reverse centering

To save space, this variant offers greater flexibility in mounting the product on the machine.

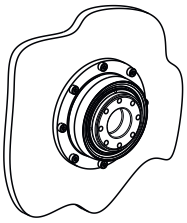

E = ATEX

Devices bearing the Ex symbol comply with EU Directive 2014/34/EN (ATEX) and are approved for use in defined explosion-prone zones. Performance data is limited and can be found in the operating instructions.

F = Food grade lubrication

These products are available with food-grade lubrication and can therefore be used in the food industry. Please note that the torque ratings in the catalog are reduced by 20 % (excluding V-Drive).

G = Grease

This variant allows you to lubricate selected products with grease instead of oil. Please note that the torque ratings in the catalog are reduced by 20 %.

H = Food-grade grease

This variant allows you to lubricate selected products with food-safe grease instead of oil. Please note that the torque ratings in the catalog are reduced by 40%.

L = Friction optimized

A friction-optimized variant is available for HIGH SPEED products.
Design changes allow the products to be used particularly in applications with high temperature sensitivity, high nominal speeds or long duty cycles.

R = Flange with slotted holes

This output type is designed for linear applications with rack and pinion or belt pulley. Integrated slotted holes enable easy positioning of the pinion or simple tensioning of the belt.

W = Corrosion resistant

These products can be used in corrosive environments, e.g. in the food industry, pharmaceutical industry or packaging industry. All external product areas have been designed to avoid corrosion. In addition the products are provided with food-grade grease lubrication. Please note that the torque ratings in the catalog are reduced by 20 % (excluding V-Drive).

alpha Advanced Linear Systems

Strong performance in the advanced segment

Advanced Linaer Systems are adapted to applications with average to high demands in terms of smooth running, positioning accuracy and feed force. Different gearbox versions and options such as HIGH TORQUE or HIGH SPEED can be selected to utilize the most appropriate system for the application. Typical fields of application include wood, plastic and composite machining, machining centers and automation.

The alpha preferred linear system – The best of each segment

Our preferred linear systems in the Advanced Segment are always comprised of the perfect combination of gearbox, pinion, rack and lubrication system. The systems are optimized to achieve the required feed force, feed speed, rigidity and degree of utilization of the individual components.

For further information, refer to our alpha Linear Systems catalog and our website: www.wittenstein-alpha.com/linear-systems

For a wide range of applications

Linear systems from WITTENSTEIN alpha are suitable for a wide range of applications and industries. New standards and advantages have been achieved in the following areas:

- Smooth operation
- Positioning accuracy
- Feed force
- Power density
- Rigidity
- Easy installation
- Design options
- Scalability

Together with a comprehensive range of services, we pledge to support you from the initial concept to the design, installation and commissioning phase. We will also ensure a consistent supply of spare parts.

Your benefits at a glance

Perfectly adapted linear systems available with planetary, right-angle and worm gearboxes or as an actuator

Optionally with INIRA

Large individual configuration range due to numerous pinion/gearbox combinations

INIRA: The revolution in rack assembly

Simply scan the QR code using your smartphone to see INIRA in action.

INIRA combines our existing innovative concepts for the simple, safe and efficient installation of racks. INIRA clamping, INIRA adjusting and INIRA pinning have already made the assembly process much faster, more accurate and more ergonomic. Available for the Advanced and Premium Linear Systems.

INIRA clamping: Simply faster and more ergonomic

Previously, enormous effort was required to clamp racks to the machine bed using screw clamps. INIRA clamping integrates the clamping device in the rack. The rack incorporates a mounting sleeve which is guided over the head of the fastening screw to ensure quick and ergonomic clamping.

INIRA adjusting: Simply safer and more precise

In combination with INIRA clamping, INIRA adjusting is the ideal solution for perfectly adjusting the transition between two rack segments. The innovative setting tool can adjust the transition extremely reliably and precisely, accurate to the micrometer.

INIRA pinning: Simply better and more efficient

The previous method used for pinning racks was extremely time-consuming. Precision bores have to be drilled and the chips generated must be carefully removed from the assembly. INIRA pinning now offers a completely new solution for the chipless pinning of racks, which reduces installation times considerably (time spent on each rack ~ 1 min).

INIRA clamping

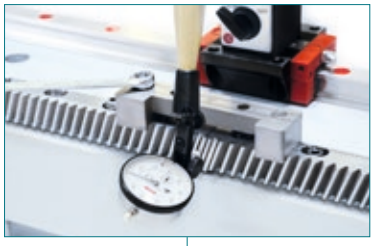

INIRA adjusting

INIRA pinning

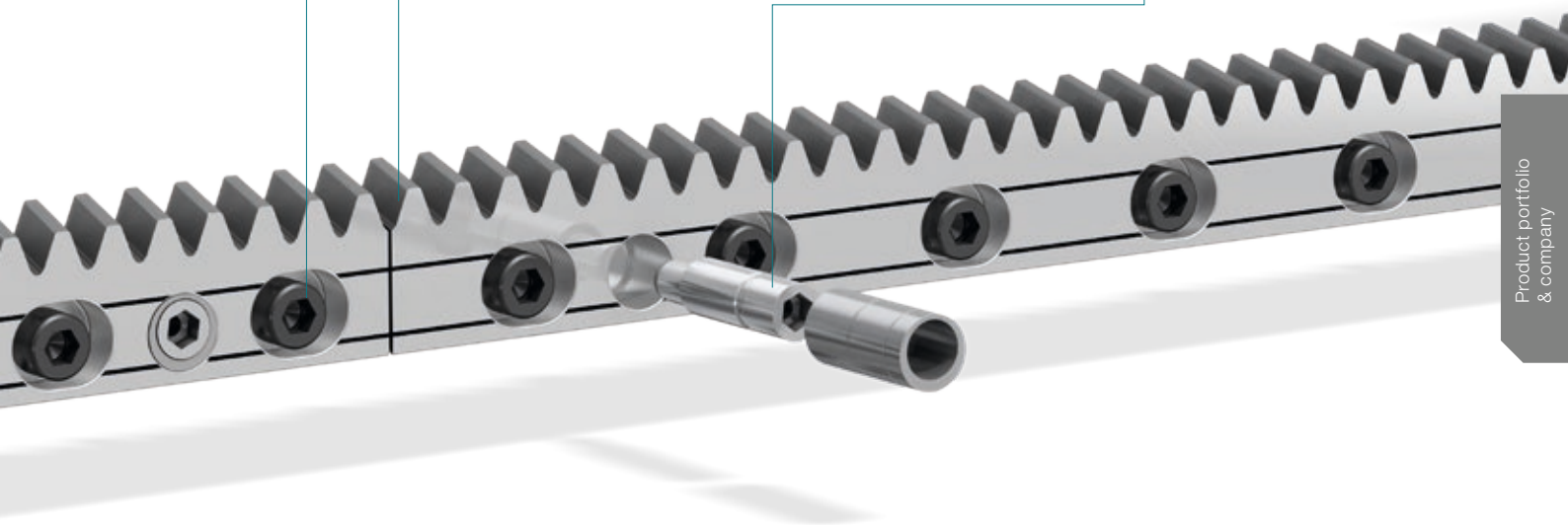

Precision meets motion = premo by WITTENSTEIN alpha

premo is a new, powerful actuator platform that combines absolute precision with perfect movement. The central idea behind this first fully scalable servo-actuator platform is uncompromising flexibility from the viewpoint of the user. Motors and gearboxes with application-related graduated performance characteristics can be configured modularly to individual actuators. The result is a highly versatile modular system with customizable power, designed for a wide variety of applications. The core of the motor / gearbox unit is a torsionally rigid precision gearbox with low backlash and excellent torque density combined with the equally powerful, permanent magnet servo motor with a split winding that guarantees low cogging and minimal velocity ripple.

premo – clearly superior in performance

- Higher machine performance thanks to higher acceleration torque
- High torque density combined with a compact design allow for the realization of higher performance machines with significant space saving
- Improved connectivity to next generation controllers from leading system providers through the use of digital feedback (EnDat 2.2, DSL, HIPERFACE DSL®, DRIVE-CLiQ)
- Compatibility for high bus voltages up to 750 V DC
- Reduced wiring requirement through single-connector technology
- Improved reliability and safety through the use of more powerful brakes and SIL 2 encoders

premo highlights

Optimized power density for greater energy efficiency and productivity

Flexible mechanical and electrical interfaces for high scalability

Variety of options for individually upgrading the basic configuration

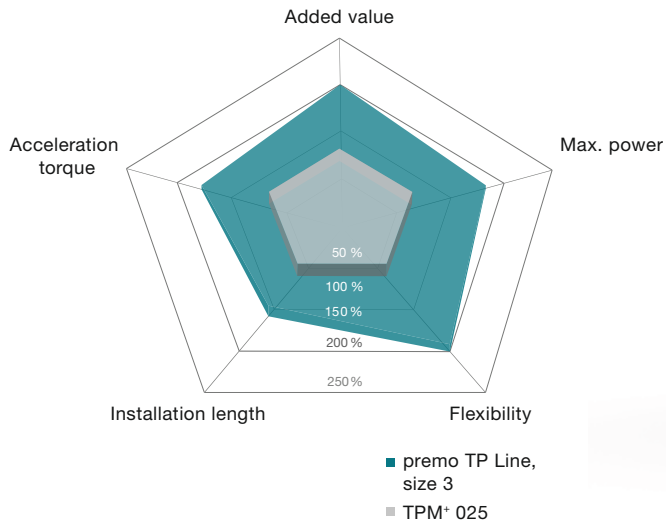

premo application examples

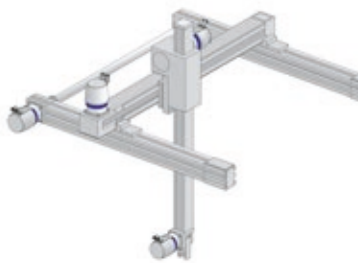

Handling portal
premo SP Line

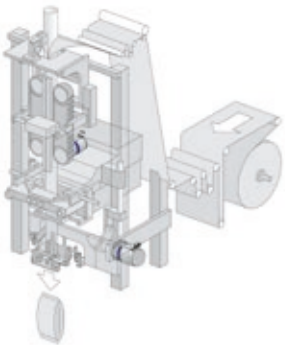

Fill and Seal machine
premo TP Line

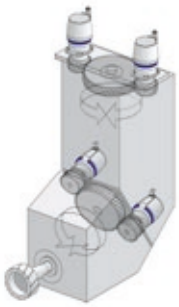

Milling cutter for a machining center
premo XP Line

Typical fields of application and industry solutions

- Delta robot (axes 1–3, swivel axis)
- Handling portal (Z-axis, swivel / rotating axis)
- Machine tool reaming (rotating axes A–C, tool changer)
- Fill and Seal Machine (incl. jaw stroke, sealing jaw, blade)
- Folding carton packaging (incl. assembly / folding, filling valve)
- Plastic thermoform (tool axis)

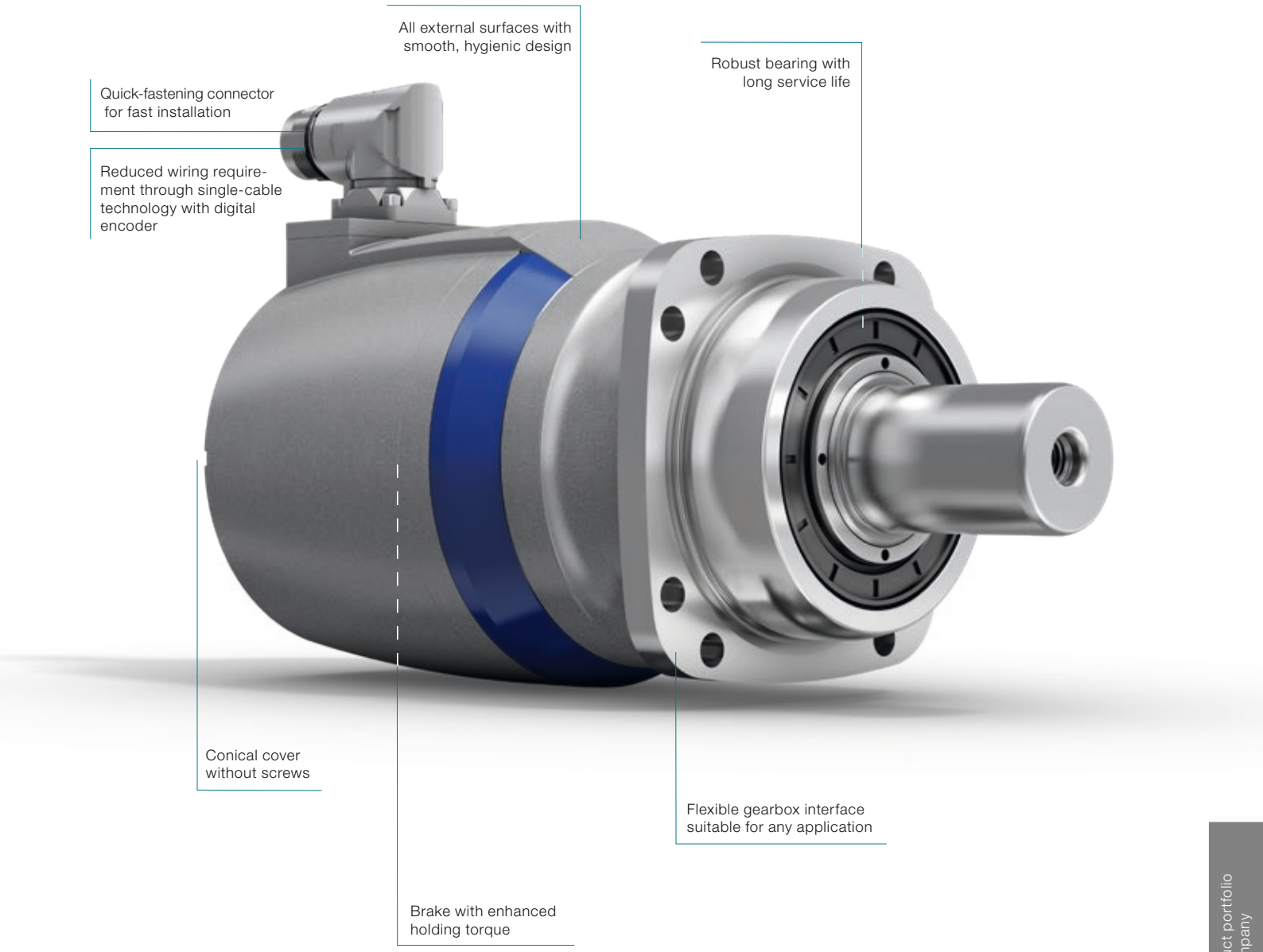

Accessories – smart additions for intelligent performance

Gearboxes, accessories and consulting from a single source

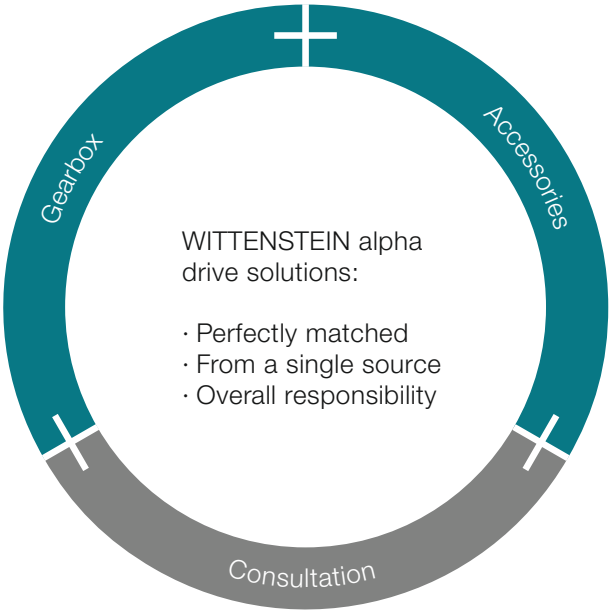

Optimization of your added value chain

Use the combination of gearbox and accessories in a complete package to streamline your internal processes.

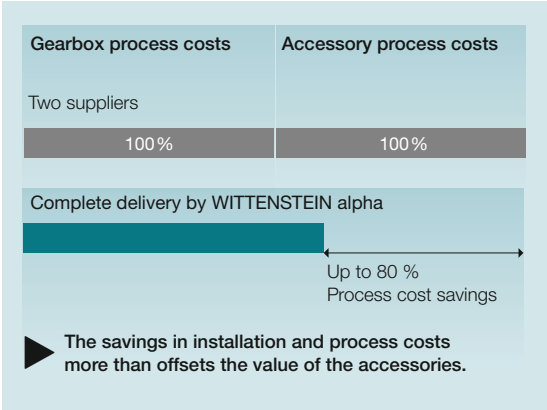

Shrink disks

Shrink disks are frictional hub / shaft connections. Together with our hollow shaft or mounted shaft gearboxes for mounting directly on load shafts, machines can be designed to take up a minimal installation space.

The benefits:
· Simple mounting and removal
· Quick selection, easy and convenient
· Optional: corrosion resistant version

Preferred shrink disk series

To view a wide range of nickel-plated, stainless steel and other shrink disks as well as all the relevant technical data and dimensions, visit our homepage
www.wittenstein-alpha.com

Couplings

Couplings are used for compensating misalignment during assembly and material-related heat expansion

Compensation for shaft misalignment

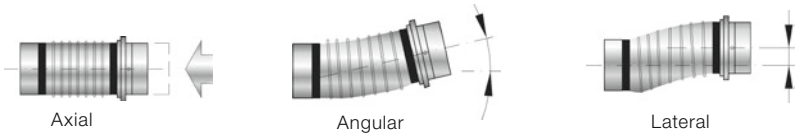

Metal bellows coupling

- Compensation for shaft misalignment
- Completely backlash free
- Corrosion resistant version available as an option (BC2, BC3, BCT)
- High torsional rigidity

Elastomer coupling

- Compensation for shaft misalignment
- Completely backlash free
- Selectable torsional rigidity / damping
- Compact design
- Extremely simple installation (plug-in)

Torque limiter

- Compensation for shaft misalignment
- Completely backlash free
- Precise, preset overload protection (switch-off in 1 – 3 ms)
- Precise repeat accuracy
- Just one protection element per axis

Preferred coupling series

alpha Premium

alpha Advanced

alpha Value

alpha Basic

Preferred series are defined for the relevant gearbox segments to make selection easier. Preferred couplings are defined based on the maximum torque that the gearbox can transmit. Standard industrial conditions for the number of cycles (1000/h) and ambient temperature were adopted.

Please note that the coupling load is based on the torque that the gearbox can transmit and not the torque in your application. We recommend using our cymex®5 design software to create a more detailed design. (www.wittenstein-cymex.com)

For more coupling types, please visit
www.wittenstein-alpha.com

Mounting ring for TP+ / DP+ gearboxes

This mounting ring comprises a lightweight foam ring with a set of screws arranged on it, already adapted for the hole circle on the TP+ / DP+ flange gearboxes. The screws are coated with threadlocker and corrosion protection, and are designed with the right length for the machine bed. The mounting ring is shipped completely preassembled together with the gear-box. The pre-selection and provision of the correct screws considerably reduces the time for assembly.

Your benefits at a glance

- Screw calculations no longer required
- Lower logistics costs
- Shorter assembly time
- Fewer mounting errors
- No need to coat the screws with threadlocker in a separate step

How to mount the gearbox and ring to the application

1. Insert the gearbox into the machine (Fig. 1)
2. Screw on the gearbox
   → The screw heads are pushed through the foam of the mounting ring (Fig. 2)
3. Tighten the screws to the specified torque
4. Removal and disposal of the mounting ring (Fig. 3)

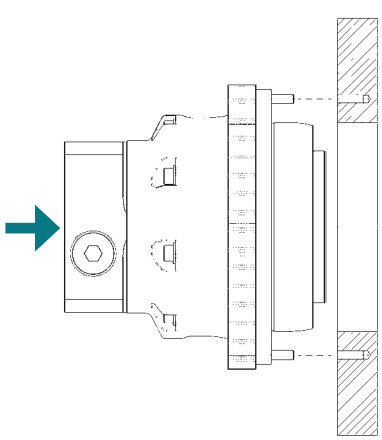

Fig. 1

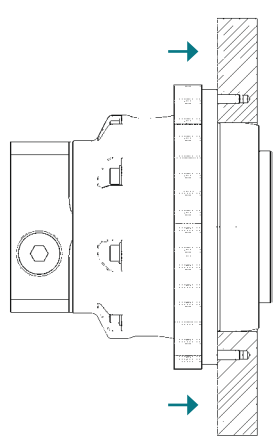

Fig. 2

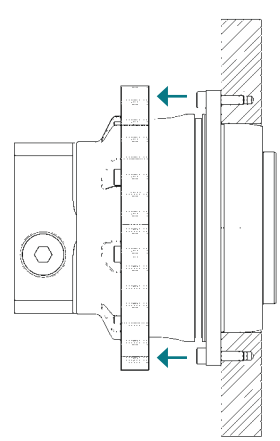

Fig. 3

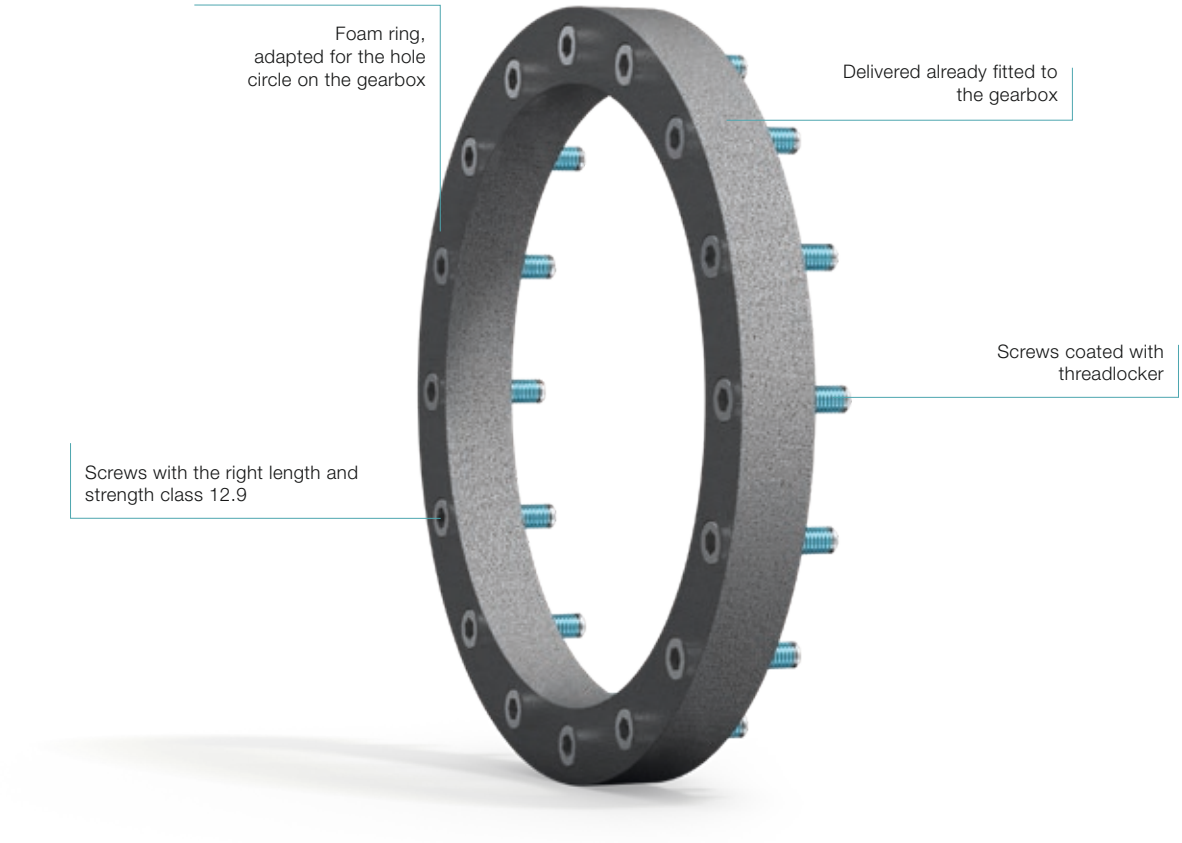

Properties of the interface for the connection to the machine

The screw length and strength are suitable for the following connection materials:

Material	Min. shear strength
Steel	t_B = 540 Nm
Cast iron	t_B = 400 Nm
Aluminum	t_B = 203 Nm

Available variants

The mounting ring is available for the following gearboxes:

Gearbox	Material number	Ordering code	Bolts	Tightening torque
TP+ 010S MF	20065191	MR 010-S-F-M5x20-12.9	8x M5x20 12.9	T_A = 9 Nm
DP+ 010S MF				
TP+ 010S MA	20065199	MR 010-S-A-M5x20-12.9	16x M5x20 12.9	T_A = 9 Nm
DP+ 010S MA				
TP+ 025S MF	20065192	MR 025-S-F-M5x20-12.9	8x M5x20 12.9	T_A = 9 Nm
DP+ 025S MF				
TP+ 025S MA	20065200	MR 025-S-A-M5x20-12.9	16x M5x20 12.9	T_A = 9 Nm
DP+ 025S MA				
TP+ 050S MF	20065193	MR 050-S-F-M6x25-12.9	12x M6x25 12.9	T_A = 15.4 Nm
DP+ 050S MF				
TP+ 050S MA	20065201	MR 050-S-A-M6x25-12.9	24x M6x25 12.9	T_A = 15.4 Nm
DP+ 050S MA				

Support at each interaction stage

With the WITTENSTEIN alpha service concept, we are also setting new standards in the field of customer support.

Global presence

Our global consultation network will help you overcome your complex challenges through our extensive experience, a variety of design tools and individual engineering services.

Speed counts

Our speedline® team guarantees fast response times in the area of logistics. We provide on-site support during the installation and commissioning of mechanical systems to give you a sustained competitive edge.

Personal consultation

Our highly qualified and committed expert personnel will accompany you throughout the entire product lifecycle - around the clock. When it comes to customer support, you can count on us!

Design

Consultation
CAD POINT
SIZING ASSISTANT
Sizing software cymex®
Engineering

Installation

speedline® delivery
Installation on-site
Operating & installation instructions
Pick-up & return service

We are happy to advise you:

24 h service hotline: +49 7931 493-12900

No matter where you need us:
A comprehensive sales and service network provides quick availability and competent support worldwide.

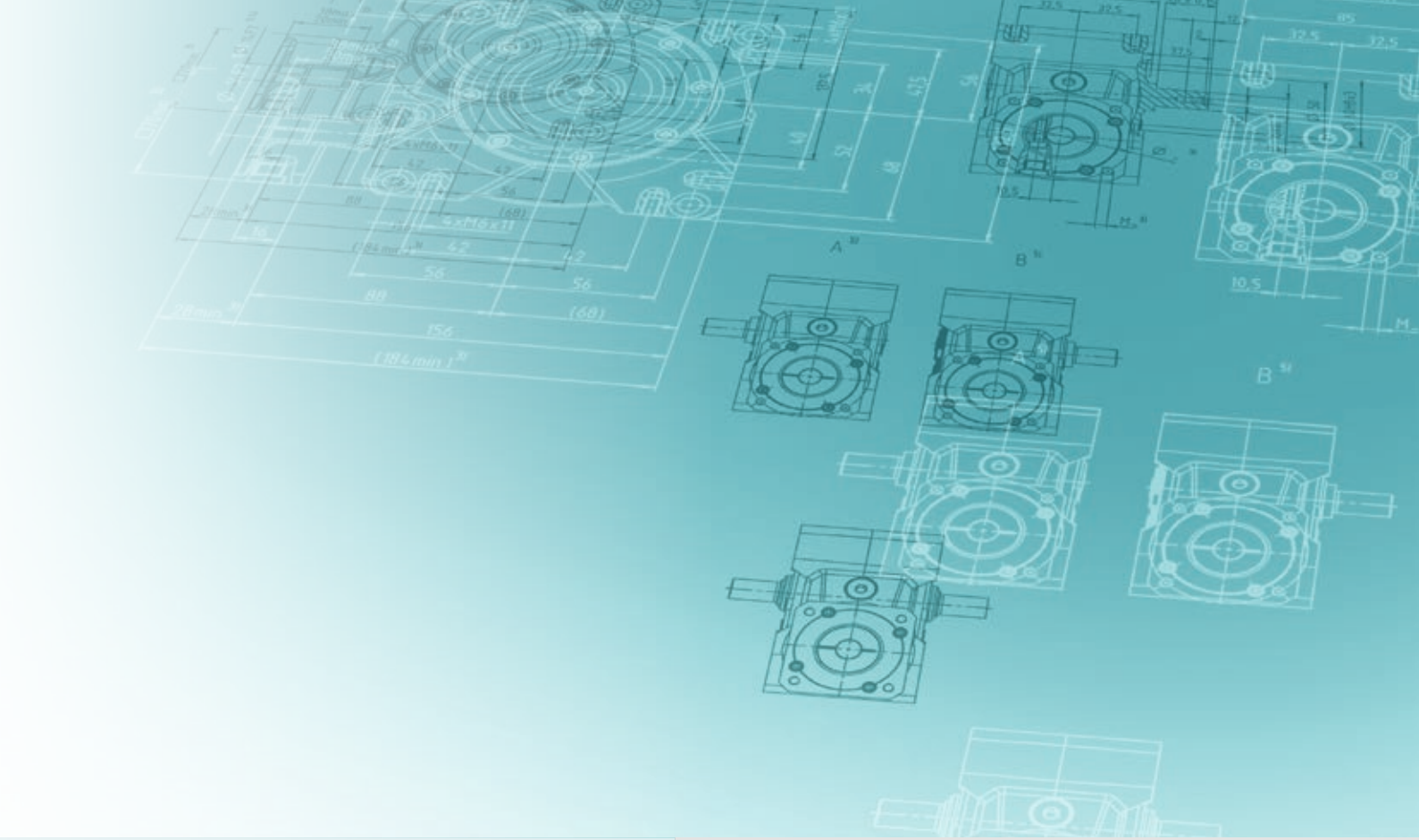

Maintenance

24 h service hotline
Maintenance and inspection
Repair
cymex® statistics
Modernization

Training

Product training
Sizing training
Installation training
Service training

Support at each interaction stage

Design

Whatever your requirements are: we offer the right design methodology. Use the CAD POINT to gain easy access to CAD files, the SIZING ASSISTANT for creating simple designs, cymex® 5 for precise dimensioning and our engineering service for individual solutions.

Consultation

- Personal contact on-site
- Professional application calculations and drive design create the best solutions

Engineering

Catalog gearboxes:

- Advanced software tools for accurate calculation, simulation and analysis of the drive train
- Optimization of your productivity and reduction in development costs

Special gearboxes:

- Gearing design and development
- Development and production of special gearboxes
- Send all inquiries to: **sondergetriebe@wittenstein.de**

CAD POINT

- 3D data of selected solution
- Online comparison with motor geometry
- Transparent and simple selection of required components

SIZING ASSISTANT

- Efficient online design within seconds
- Convenient comparison function
- Automatic geometry adjustment

cymex® 5 sizing software

- Dimensioning, design and evaluation of the entire drive train
- Reliable, efficient design
- Optimization of drive system

Installation

All delivered products are perfectly matched to your application environment and fully operational right away.

Our service experts support you in the installation and commissioning of complex mechatronic systems, guaranteeing maximum availability of your plant.

speedline® delivery

Tel. +49 7931 493-10444

- Delivery of standard series in 24 or 48 hours ex works*
- Outstanding flexibility for fast deliveries at short notice

Operating and installation instructions

- Detailed explanations of how to use the product
- Motor installation videos
- Assembly videos on rack and pinion system

Installation on-site

- Professional installation
- Optimal integration of the system in your application
- Explanation of the drive function

Pick-up and return service

- Cost savings through minimization of downtimes
- Professional logistics organization
- Reduction of transport risks through customized, direct pick-up and delivery

* Non-binding delivery time depending on part availability.

Support at each interaction stage

Maintenance

WITTENSTEIN alpha guarantees fast repairs of the highest quality and precision – with short throughput times and intensive support. In addition, we will provide you with information about various measurements, material analyses and condition monitoring inspections. You can rely on short response times, unbureaucratic processing and individual support.

24 h service hotline

Tel. +49 7931 493-12900

- Available round the clock
- Personal, prompt service for resolving time-critical maintenance issues

Maintenance and inspection

- Documentation regarding condition and expected service life
- Maintaining required state
- Customized maintenance schedules

Repair

- Restoring to required state
- Short throughput times
- Immediate response in time-critical situations

cymex® statistics

- Systematic field data acquisition
- Reliability calculations (MTBF)
- Customized evaluations

Modernization

- Professional retrofitting
- Reliable compatibility testing of existing solutions

Training

Discover how our products function and how they can add value to your application. We offer you training courses at our premises or on-site at your plant. Benefit from practice-oriented learning methods and a highly skilled team of trainers.

Product training

Greater knowledge enables greater achievement. We will be pleased to share our expert knowledge with you: Profit from our many years of experience and learn more about the product portfolio of WITTENSTEIN alpha.

Installation training

We offer you individual training courses on-site for your system application of selected linear axes as well as professional installation.

Sizing training

Become a design expert! We will provide you with training courses on our design software, adapted to your requirements. Whether for beginners or experts, for occasional or regular users – we adapt our training course to your wishes and requirements.

Service training

Participation in a service training course is a prerequisite for sourcing spare parts at the parts list level. We offer you training courses at our premises or on-site at your plant. Moreover, we regularly host maintenance workshops at which the participants are instructed in safe handling during mounting of the motor to the gearbox as well as the independent replacement of wearing parts and gearbox assemblies.

The WITTENSTEIN group – The company and its fields of business

With approximately 2,500 employees worldwide, WITTENSTEIN SE stands for innovation, precision and excellence in the world of mechatronic drive technology, both nationally and internationally. The group is active in six innovative fields of business. Furthermore, WITTENSTEIN SE is represented by some 60 subsidiaries in around 40 countries in all important technology and sales markets worldwide.

Our fields of expertise

We provide know-how for a host of different sectors:

- Machine and plant construction
- Software development
- Aerospace
- Automotive & E-mobility
- Energy
- Oil & Gas Exploration and Production
- Medical technology
- Measurement and testing technology
- Nanotechnology
- Simulation

WITTENSTEIN | alpha

WITTENSTEIN alpha GmbH
High-precision servo drives and linear systems

WITTENSTEIN | motion control

WITTENSTEIN motion control GmbH
Customized linear and rotary servo systems

WITTENSTEIN | cyber motor

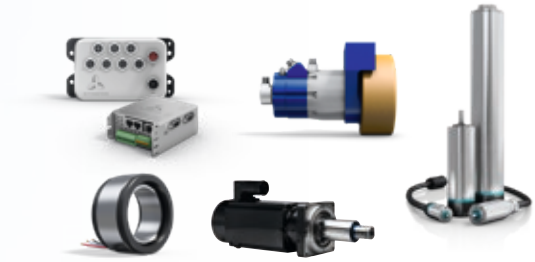

WITTENSTEIN cyber motor GmbH
Highly dynamic servo motors and drive electronics

WITTENSTEIN | intens

WITTENSTEIN intens GmbH
Smart drive solutions in and on the human body

WITTENSTEIN | aerospace & simulation

WITTENSTEIN aerospace & simulation GmbH
Mechatronic drive systems for aerospace & simulation

attocube
pioneers of precision

attocube systems AG
Nanoprecision drive and measurement technology solutions

Gearbox general – Detailed sizing

Cyclic operation **S5** and continuous operation **S1**

$$ED = \frac{(t_b + t_c + t_d)}{(t_b + t_c + t_d + t_e)} \cdot 100$$

$$ED = t_b + t_c + t_d$$

Calculate the duty cycle ED

ED ≤ 60 % **and** ED ≤ 20 min.

ED > 60 % **or** ED > 20 min

Cyclic operation: SP⁺ MF

Continuous operation: SP⁺ MC (otherwise consult us)

$$Z_h = \frac{3600}{(t_b + t_c + t_d + t_e)}$$ see diagram 1

Calculate the number of cycles Z_h

f_s is dependent on Z_h see diagram 2

Calculate the shock factor f_s — see diagram 2

T_{2b} depends on the application

$$T_{2b,\,fs} = T_{2b} \cdot f_s$$

Calculate the max. acceleration torque at the output including the shock factor $T_{2b,fs}$

$$f_0 = \frac{t_{\alpha 1} + \ldots + t_{\alpha n}}{t_{ges}}$$

t_α = elevation time

t_α = operating time with

$T_{2b,\,fs} \geq T_{2B}$

Calculate the elevation range f_0

$$n_{2m} = \frac{|n_{2b}| \cdot t_b + \ldots + |n_{2n}| \cdot t_n}{t_b + \ldots + t_n}$$ incl. pause time

Calculate the average elevation speed $n_{2m\alpha}$

$$n_{2m\alpha} = \frac{|n_{2\alpha 1}| \cdot t_{\alpha 1} + \ldots + |n_{2\alpha n}| \cdot t_{\alpha n}}{t_{\alpha 1} + \ldots + t_{\alpha n}}$$

Calculate the relevant output shaft revolutions f_α

$$f_\alpha = n_{2m\alpha} \cdot L_h \cdot f_0$$

L_h = required service life

Calculate of $T_{2\alpha,zul}$ — see diagramm 3

$T_{2b,\,fs} \leq T_{2\alpha,zul}$ — **no** → Select a larger gearbox or please consult

yes

i depends on
n – required output speed (for the application)
– reasonable input speed (gearbox / motor)

$$n_{1max} = n_{2max} \cdot i$$

$$n_{1max} \leq n_{1Mot\,max}$$

T – consisting of corresponding output and input torque

$$T_{1b} = T_{2b} \cdot \frac{1}{i} \cdot \frac{1}{\eta} \qquad T_{1b} \leq T_{Mot\,max}$$

λ – from resulting inertia ratio.
Guide value:: $1 \leq \lambda \leq 10$
(see alphabet for calculation)

Calculate the max. output speed n_{2max} — see diagram 1

Calculate the ratio i

n_{2max} depends on the application

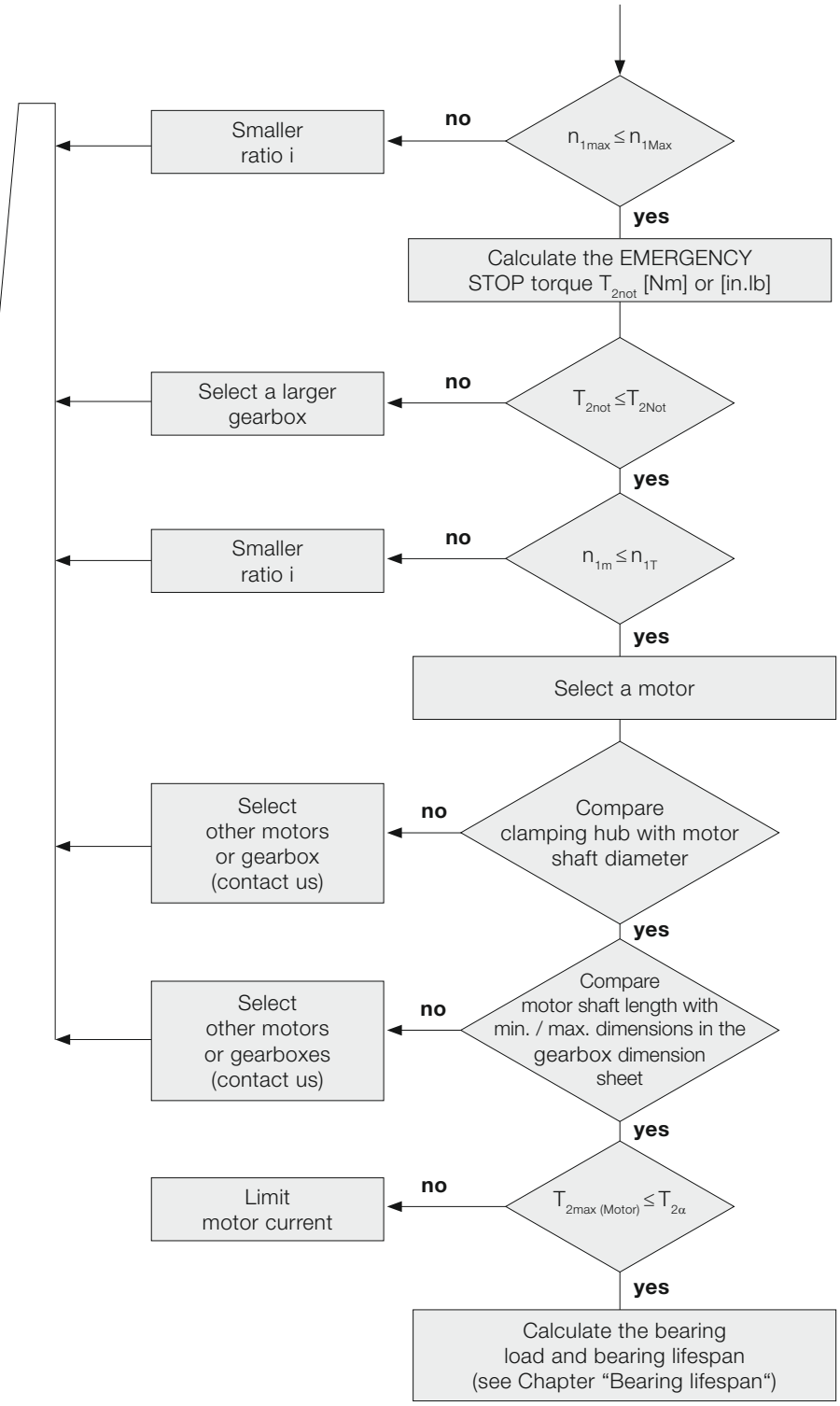

Please refer to the relevant technical data for information on the max. permissible characteristic values for your gearbox.

$\mathbf{T_{2not}}$ depends on the application

$n_{1m} = n_{2m} \cdot i$

$D_{W,\ Mot} \leq D_{clamping\ hub}$

The motor shaft must be inserted far enough into the clamping hub.

The motor shaft must protrude far enough into the clamping hub without making contact.

$T_{2max\ (Motor)} = T_{1max\ (Motor)} \cdot i \cdot \eta_{gearbox}$

The gearbox should not be damaged when the motor operates at full load, limit the motor current if necessary.

Diagram 1
Standard collective load at output. At input speeds up to rated speed n_{1N} or thermal speed limit n_{1T}, the temperature of the gearbox will not exceed 90 °C under average ambient conditions.

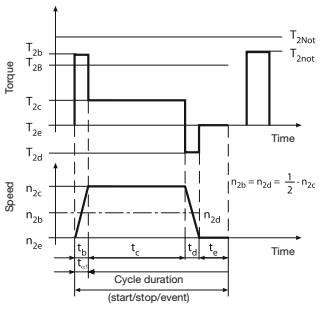

Diagram 2
Large number of cycles combined with short acceleration times may cause the drive train to vibrate. Use the shock factor f_s to include the resulting excess torque values in calculations.

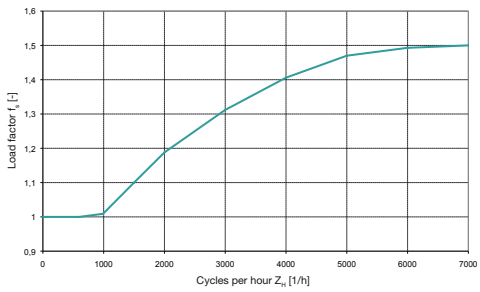

Diagram 3
The transmittable torque $T_{2\alpha,per}$ of the gearbox is dependent on the number of output shaft revolutions.
In the lower output shaft revolution range, the fatigue strength range of the toothing can be fully utilized up to the maximum value $T_{2\alpha}$.

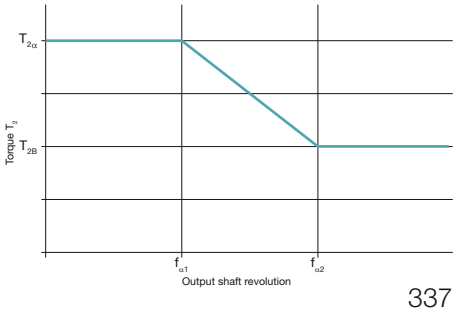

Gearbox general – Detailed sizing

Bearing lifespan L_{h10}

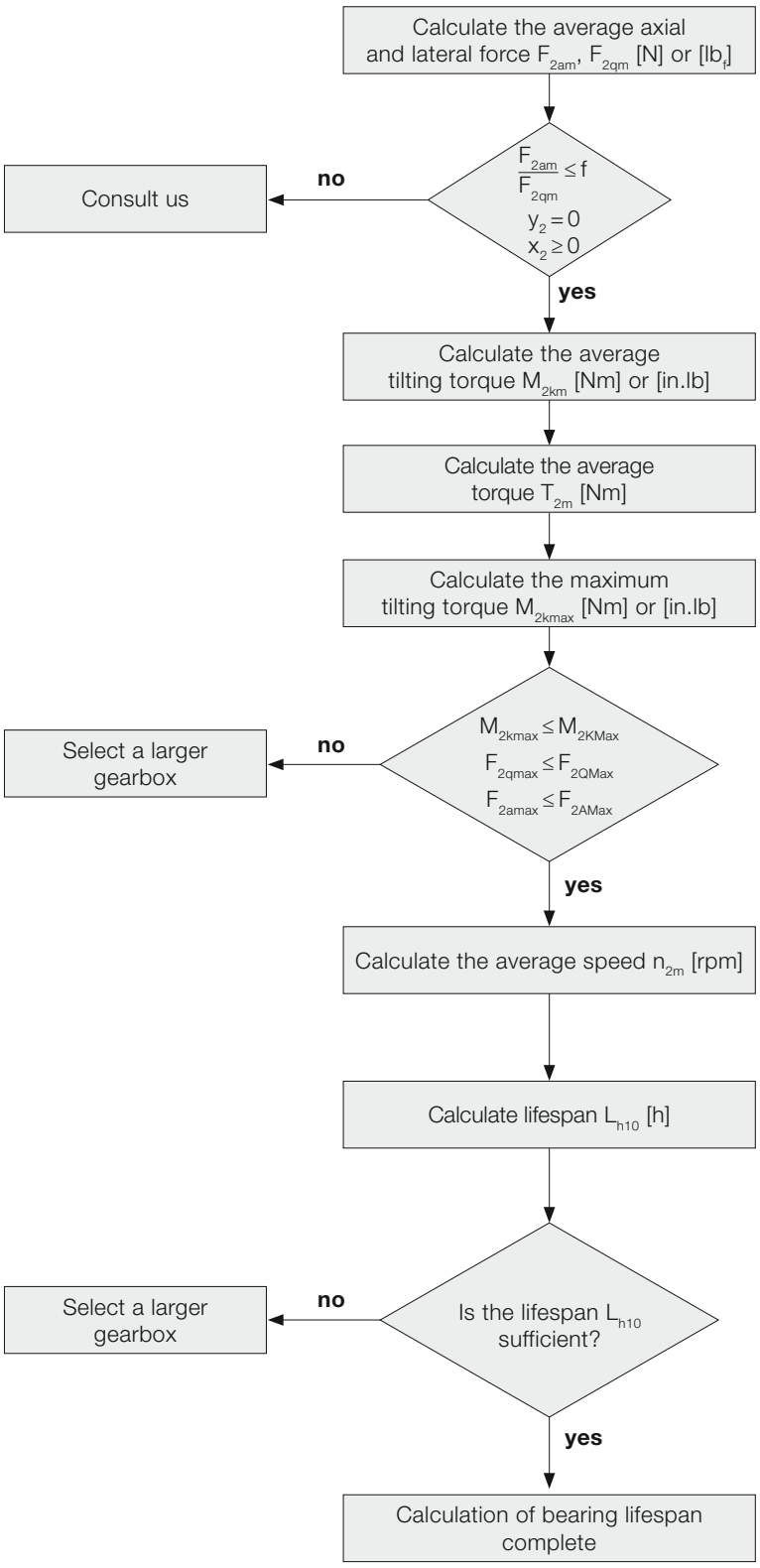

$$F_{2am} = \sqrt[3]{\frac{|n_{2b}| \cdot t_b \cdot |F_{2ab}|^3 + \ldots + |n_{2n}| \cdot t_n \cdot |F_{2an}|^3}{|n_{2b}| \cdot t_b + \ldots + |n_{2n}| \cdot t_n}}$$

$$F_{2qm} = \sqrt[3]{\frac{|n_{2b}| \cdot t_b \cdot |F_{2qb}|^3 + \ldots + |n_{2n}| \cdot t_n \cdot |F_{2qn}|^3}{|n_{2b}| \cdot t_b + \ldots + |n_{2n}| \cdot t_n}}$$

$$M_{2km} = \frac{F_{2am} \cdot y_2 + F_{2qm} \cdot (x_2 + z_2)}{W} \text{ a)}$$

$$T_{2m} = \sqrt[3]{\frac{|n_{2b}| \cdot t_b \cdot |T_{2b}|^3 + \ldots + |n_{2n}| \cdot t_n \cdot |T_{2n}|^3}{|n_{2b}| \cdot t_b + \ldots + |n_{2n}| \cdot t_n}}$$

$$M_{2kmax} = \frac{F_{2amax} \cdot y_2 + F_{2qmax} \cdot (x_2 + z_2)}{W} \text{ a)}$$

a) x, y, z in mm

$$n_{2m} = \frac{n_{2b} \cdot t_b + \ldots + n_{2n} \cdot t_n}{t_b + \ldots + t_n}$$

$$L_{h10} = \frac{16666}{n_{2m}} \cdot \left[\frac{K1_2}{M_{2km}} \right]^{p_2}$$

	metric	inch
W	1000	1

	TP⁺/TPK⁺	SP⁺/SPK⁺
f	0.37	0.40

Example with output shaft and flange:

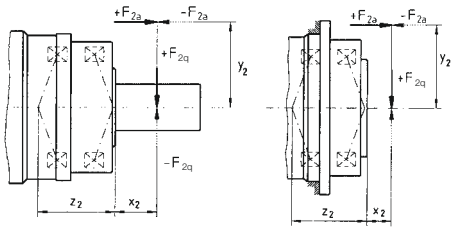

SP⁺/SPK⁺/SPC⁺		060	075	100	140	180	210	240
z_2	[mm]	42.2	44.8	50.5	63.0	79.2	94.0	99.0
	[in]	1.66	1.76	1.99	2.48	3.12	3.70	3.90
$K1_2$	[Nm]	795	1109	1894	3854	9456	15554	19521
	[in.lb]	7036	9815	16762	34108	83686	137653	172761
p_2		3.33	3.33	3.33	3.33	3.33	3.33	3.33

TP⁺/TPK⁺/ TPC⁺/DP⁺		004	010	025	050	110	300	500	2000	4000
z_2	[mm]	57.6	82.7	94.5	81.2	106.8	140.6	157	216	283
	[in]	2.27	3.26	3.72	3.20	4.21	5.48	6.12	8.50	11.1
$K1_2$	[Nm]	536	1325	1896	4048	9839	18895	27251	96400	184000
	[in.lb]	4744	11726	16780	35825	87075	167220	241171	853140	1628400
p_2		3.33	3.33	3.33	3.33	3.33	3.33	3.33	3.33	3.33

HDP⁺		010	025	050
z_2	[mm]	90.4	99.1	83.5
	[in]	3.56	3.90	3.29
$K1_2$	[Nm]	1325	1896	4048
	[in.lb]	11726	16780	35825
p_2		3.33	3.33	3.33

TK⁺/SK⁺/HG⁺/SC⁺/VH⁺/VS⁺/VT⁺: Calculation using cymex®.
Please contact us for further information.

Hypoid gearboxes – Detailed sizing

Gearbox types and sizes				TK+ 004 SK+ 060 HG+ 060	SPK+ 075 TPK+ 010 TPK+ 025 MA	TK+ 010 SK+ 075 HG+ 075	SPK+ 100 TPK+ 025 TPK+ 050 MA
Dimensions of rearward drive							
Solid shaft:	diameter	$øD_{k6}$	mm	16	16	22	22
	length	L	mm	28 ±0.15	28 ±0.15	36 ±0.15	36 ±0.15
Hollow shaft interface outer diameter		$øD_{h8}$	mm	18	18	24	24
Hollow shaft interface inner diameter		$ød_{h6}$	mm	15	15	20	20
Hollow shaft interface length		L_{hw}	mm	14	14	16	16
Distance from input axis		A	mm	42.9	42.9	52.6	52.6
Key dimensions (E = key as per DIN 6885, sheet 1, form A)		l	mm	25	25	32	32
		b_{h9}	mm	5	5	6	6
		a	mm	2	2	2	2
		h	mm	18	18	24.5	24.5
Output shaft threaded bore		B		M5x12.5	M5x12.5	M8x19	M8x19
Permissible load of rearward drive							
Max. acceleration torque [c]		$T_{3\alpha,zul}$		$= T_{2\alpha,zul}$ on the condition that $T_{2b,fs} + T_{3b,fs} \leq T_{2\alpha,zul}$	Please contact us	$= T_{2\alpha,zul}$ on the condition that $T_{2b,fs} + T_{3b,fs} \leq T_{2\alpha,zul}$	Please contact us
Nominal output torque [c]		T_{3N}		$= T_{2N} - T_{2n}$		$= T_{2N} - T_{2n}$	
EMERGENCY STOP torque [c]		T_{3Not}		$= T_{2Not} - T_{2not}$		$= T_{2Not} - T_{2not}$	
Max. axial force [b]		F_{3Amax}		1500	1500	1800	1800
Max. lateral force [b]		F_{3Qmax}		2300	2300	3000	3000
Max. tilting torque		M_{3Kmax}		60	60	100	100
Calculation of average tilting torque at the rearward drive							
Factor for tilting torque calculation		z_3	mm	11.9	11.9	15.6	15.6
Distance between axial force and center of gearbox		y_3	mm	Application-dependent			
Distance between lateral force and shaft collar		x_3	mm	Application-dependent			

[a] Connection via shrink discs
[b] Refers to center of shaft
[c] See also page 336, "Detailed dimensioning – Gearbox"

Rearward drive:

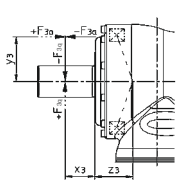

$$M_{3k} = F_{3a} \cdot y_3 + F_{3q} \cdot (x_3 + z_3)$$

Smooth shaft

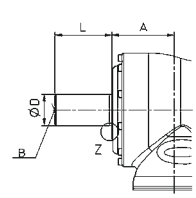

Shaft with key

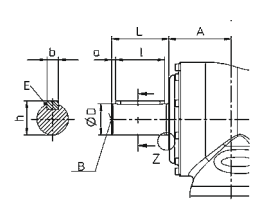

TK+ 025 SK+ 100 HG+ 100	SPK+ 140 TPK+ 050 TPK+ 110 MA	TK+ 050 SK+ 140 HG+ 140	SPK+ 180 SPK+ 240 TPK+ 110 TPK+ 500 TPK+ 300 MA	TK+ 110 SK+ 180 HG+ 180	SPK+ 210 TPK+ 300 TPK+ 500 MA
32	32	40	40	55	55
58 ±0.15	58 ±0.15	82 ±0.15	82 ±0.15	82 ±0.15	82 ±0.15
36	36	50	50	68	68
30	30	40	40	55	55
20	20	25	25	25	25
63.5	63.5	87	87	107.8	107.8
50	50	70	70	70	70
10	10	12	12	16	16
4	4	5	5	6	6
35	35	43	43	59	59
M12x28	M12x28	M16x36	M16x36	M20x42	M20x42
$= T_{2\alpha,zul}$ on the condition that $T_{2b,fs} + T_{3b,fs} \leq T_{2\alpha,zul}$ $= T_{2N} - T_{2n}$ $= T_{2Not} - T_{2not}$	Please contact us	$= T_{2\alpha,zul}$ on the condition that $T_{2b,fs} + T_{3b,fs} \leq T_{2\alpha,zul}$ $= T_{2N} - T_{2n}$ $= T_{2Not} - T_{2not}$	Please contact us	$= T_{2\alpha,zul}$ on the condition that $T_{2b,fs} + T_{3b,fs} \leq T_{2\alpha,zul}$ $= T_{2N} - T_{2n}$ $= T_{2Not} - T_{2not}$	Please contact us
2000	2000	9900	9900	4000	4000
3300	3300	9500	9500	11500	11500
150	150	580	580	745	745
16.5	16.5	20	20	23.75	23.75
Application-dependent					
Application-dependent					

Hollow shaft interface [a)]

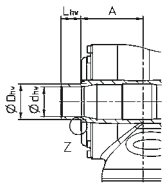

Hollow shaft

No connection possible

Cover

No connection possible

Worm gearboxes – Detailed sizing

A: Simplified sizing for servo motors based on the maximum motor torque: $\mathbf{M_{max} * i \leq T_{2\alpha}}$

B: Sizing based on the application

Step 1:
Determine the application data

$\mathbf{T_{2b}}$= _____ **[Nm]** $\mathbf{n_{1n}}$= _____ **[rpm]**

Step 2:
Determine the operating mode factor $\mathbf{K_M}$= _____

Typical applications	Cycle	Torque characteristic	Operating mode factor K_M
Format changing, e.g. in packaging machines, drives for processing equipment, actuators etc.	**S5 operation:** Low duty cycle Small number of cycles Low dynamics	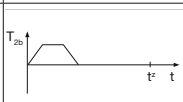	1.0
Tool changers with low dynamics, pick & place gantry axes, tire building machines etc.	**S5 operation:** Medium duty cycle Small number of cycles Medium dynamics	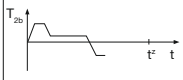	1.6
Linear axes in plasma, laser or water jet cutters, portals, tool changers with high dynamics	**S5 operation:** Medium duty cycle Medium number of cycles High dynamics	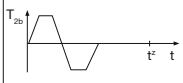	1.9
Roller drives in printing presses, star drives in rackers etc.	**S1 operation:** High duty cycle	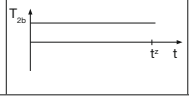	2.2
cymex® 5 also allows sizing calculations for other applications / cycles!			

Step 3:
Determine the sizing factor f_a with the operating mode factor K_M $\mathbf{f_a}$= _____

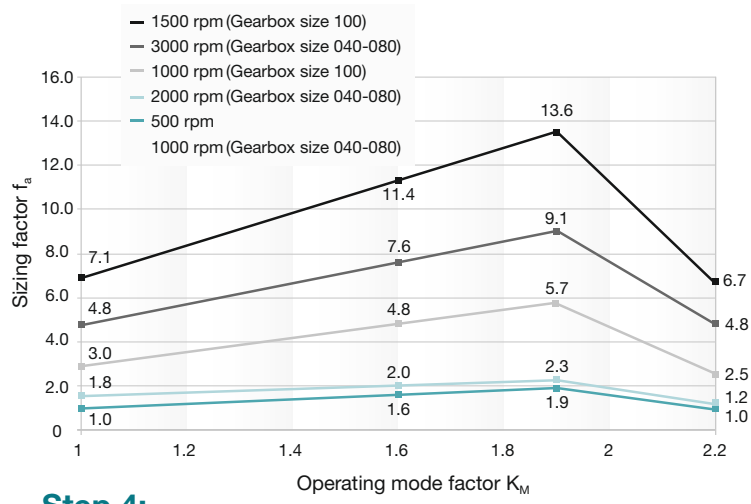

Step 4:
Compare the equivalent application torque with the maximum gearbox $\mathbf{T_{2\alpha}}$ (see table, Step 5)

$$T_{2_eq} = f_a * T_{2b} \leq T_{2\alpha}$$

$$T_{2_eq} = ____ * ____ \leq T_{2\alpha}$$

$$T_{2_eq} = ____ \text{ [Nm]} \leq ____ \text{ [Nm]}$$

We recommend using a vent screw for duty cycles ≥ 60 %, longer than 20 min (S1 operation) and n1N ≥ 3000 rpm.

Step 5: Quick selection of the technical data

			V-Drive Advanced				
			040	**050**	**063**	**080**	**100**
Ratio	i		4 - 400				
Maximum torque[a] (at n_1= 500 rpm)	$T_{2\alpha}$	Nm	74-106	165-204	319-372	578-785	1184-1505
		in.lb	655-938	1460-1805	2823-3292	5115-6947	10478-13319
Max. input speed	n_{1max}	rpm	6000	6000	4500	4000 / 4500[b]	3500 / 4000[b]
Max. lateral force	F_{2QMax}	N	2400	3800	6000	9000	14000
		lb_f	540	855	1350	2025	3150
Operating noise (with n_1 = 3000 rpm no load)	L_{PA}	dB(A)	≤ 54	≤ 62	≤ 64	≤ 66	≤ 70
Max. torsional backlash	j_t	arcmin	≤ 3	≤ 3	≤ 3	≤ 3	≤ 3
Service life (For calculation see "Information")	L_h	h	> 20000	> 20000	> 20000	> 20000	> 20000

[a] The maximum torques depend on the ratio.
[b] First value for single-stage version, second value for two-stage version.

Account must be taken of the lateral and axial forces at the output:
Please also carry out steps 6 and 7 if forces are present at the output (e.g. if timing belt pulleys, pinions or levers are mounted there).

Step 6 (if external forces are present):

Determine the forces acting on the output and check the boundary conditions

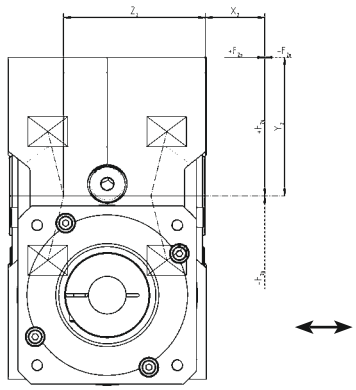

Lateral force F_{2q} = _____ [N]
Lateral force distance x_2 = _____ [mm]
Axial force F_{2a} = _____ [N]
Axial force distance y_2 = _____ [mm]
(required if F_{2a} is present)

Conditions if axial force F_{2a} is present:

1. $F_{2a} \leq 0.25 * F_{2q} \Rightarrow$ (_____ ≤ 0.25 * _____) ☐ **Met** ☐ **Not met:** Sizing with cymex® 5

2. $y_2 \leq x_2 \Rightarrow$ (_____ ≤ _____) ☐ **Met** ☐ **Not met:** Sizing with cymex® 5

Step 7:

Determine the maximum equivalent force acting on the output F_{2_eq}

$F_{2_eq} = F_{2q} + 0.25 * F_{2a} \leq F_{2QMax}$ (F_{2QMax} can be determined from the diagram below)

F_{2_eq} = _____ + 0.25 * _____ ≤ _____

F_{2_eq} = _____ [N] ≤ _____ [N] ☐ **Met** ☐ **Not met:** Sizing with cymex® 5

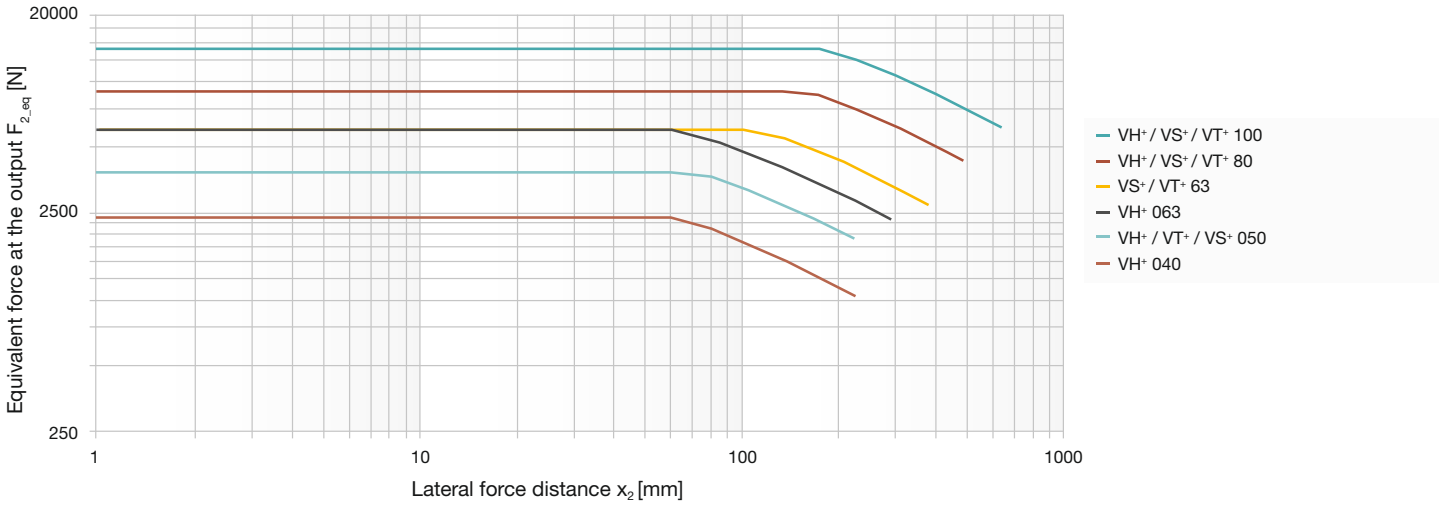

Glossary – the **alpha**bet

Adapter plate

WITTENSTEIN alpha uses a system of standardized adapter plates to connect the motor and the gearbox, making it possible to mount a WITTENSTEIN alpha gearbox to any desired motor without difficulty.

Angular minute

A degree is subdivided into 60 angular minutes (= 60 arcmin = 60').

Example:
If the torsional backlash is $j_t = 1$ arcmin, the output can be turned 1/60°. The repercussions for the application are determined by the arc length:
$b = 2 \cdot \pi \cdot r \cdot \alpha° / 360°$.
Example:
A pinion with a radius r = 50 mm mounted on a gearbox with torsional backlash $j_t = 3$ arcmin can be turned b = 0.04 mm.

Axial force (F_{2AMax})

The axial force acting on a gearbox runs parallel to its output shaft or perpendicular to its output shaft. It may be applied with axial offset via a lever arm y_2 under certain circumstances, in which case it also generates a bending moment. If the axial force exceeds the permissible catalog values (max. axial force F_{2AMax}), additional design features (e.g. axial bearings) must be implemented to absorb these forces.

Example with output shaft and flange:

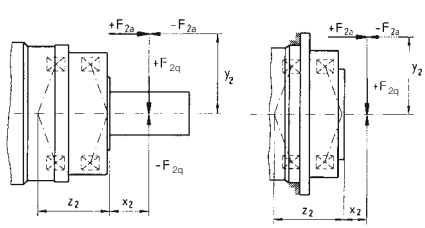

Bushing

If the motor shaft diameter is smaller than the → **clamping hub**, a bushing is used to compensate the difference in diameter. The bushing must have a minimum thickness of 1 mm and a motor shaft diameter of 2 mm.

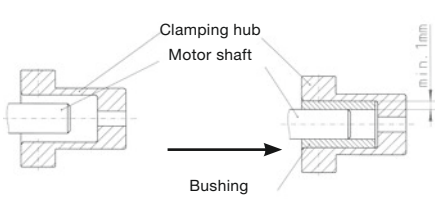

CAD POINT

Performance data, dimension sheets and CAD data for all types of gearbox can be found online in our CAD POINT together with comprehensive documentation of the selection.
(www.wittenstein-cad-point.com)

Clamping hub

The clamping hub ensures a frictional connection between the motor shaft and gearbox. A → **bushing** is used as the connecting element if the motor shaft diameter is smaller than that of the clamping hub. Optionally, a positive connection via a parallel key is also possible.

Continuous operation (S1)

Continuous operation is defined by the → **duty cycle**. If the duty cycle is greater than 60 % and / or longer than 20 minutes, this qualifies as continuous operation. → **Operating modes**

Cyclic operation (S5)

Cyclic operation is defined via the → **duty cycle**. If the duty cycle is less than 60 % and shorter than 20 minutes, it qualifies as cyclic operation **(→ operating modes)**.

cymex®

cymex® is the calculation software developed by our company for dimensioning complete drive trains. The software enables the precise simulation of motion and load variables. The software is available for download from our website (www.wittenstein-cymex.com). We can also provide training to enable you to make full use of all the possibilities provided by the software.

Degree of protection (IP)

The various degrees of protection are defined in DIN EN 60529 "Degrees of protection offered by enclosure (IP code)". The IP degree of protection (International Protection) is represented by two digits. The first digit indicates the protection against the ingress of impurities and the second the protection against the ingress of water.

Example: **IP65**

Protection against the ingress of dust (dust-proof)	Protection against spray water

Duty cycle (DC)

The cycle determines the duty cycle DC. The times for acceleration (t_b), constant travel if applicable (t_c) and deceleration (t_d) combined yield the duty cycle in minutes. The duty cycle is expressed as a percentage with inclusion of the pause time t_e.

$$DC\ [\%] = \left[\frac{t_b + t_c + t_d}{t_b + t_c + t_d + t_e}\right] \cdot 100 \quad \frac{\text{Motion duration}}{\text{Cycle duration}}$$

$$DC\ [\text{min}] = t_b + t_c + t_d$$

Emergency stop torque (T_{2Not})

The Emergency stop torque T_{2Not} is the maximum permissible torque at the gearbox output and must not be reached more than 1000 times during the life of the gearbox. It must never be exceeded!

Efficiency (η)

Efficiency [%] η is the ratio of output power to input power. Power lost through friction reduces efficiency to less than 1 or 100 %.

$$\eta = P_{off} / P_{on} = (P_{on} - P_{loss}) / P_{on}$$

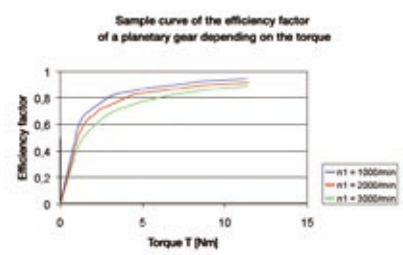

WITTENSTEIN alpha always measures the efficiency of a gearbox during operation at full load. If the input power or torque are lower, the efficiency rating is also lower due to the constant no-load torque. Power losses do not increase as a result. A lower efficiency is also expected at high speeds (see illustration).

Ex symbol

Devices bearing the Ex symbol comply with EU Directive 94 / 9 / EC (ATEX) and are approved for use in defined explosion-hazardous zones.

Detailed information on explosion groups and categories, as well as further information on the relevant gearbox are available upon request.

HIGH SPEED (MC)

The HIGH SPEED version of our gearbox has been specially developed for applications in continuous operation at high input speeds, e.g. as found in the printing and packaging industries.

HIGH TORQUE (MA)

WITTENSTEIN alpha gearboxes are also available in a HIGH TORQUE version. These gearboxes are particularly suited to applications requiring extremely high torques and maximum stiffness.

Hysteresis curve

The hysteresis is measured to determine the torsional rigidity of a gearbox. The result of this measurement is known as the hysteresis curve.

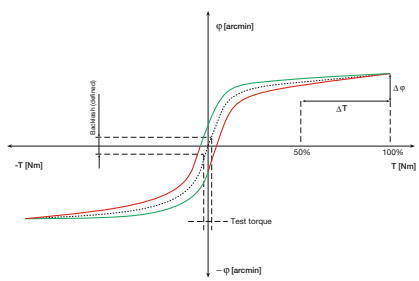

If the input shaft is locked, the gearbox is continuously loaded and relieved at the output in both directions up to a defined torque. The torsional angle is plotted against the torque. This yields a closed curve from which the → **torsional backlash** and → **torsional rigidity** can be calculated.

Jerk (*j*)

Jerk is derived from acceleration and is defined as the change in acceleration within a unit of time. The term impact is used if the acceleration curve changes abruptly and the jerk is infinitely large.

Lateral force (F_{2QMax})

The max. lateral force F_{2QMax} [Nm] is the force component acting at right angles to the output shaft or parallel to the output flange. It acts perpendicular to the → axial force and can assume an axial distance of x_2 in relation to the shaft nut or shaft flange, which acts as a lever arm. The lateral force produces a bending moment (see also → axial force).

Mass inertia ratio (λ = Lambda)

The mass inertia ratio λ is the ratio of external inertia (application side) to internal inertia (motor and gearbox side). It is an important parameter determining the controllability of an application. Accurate control of dynamic processes becomes more difficult with differing mass moments of inertia and as λ becomes greater. WITTENSTEIN alpha recommends that a guideline value of $\lambda < 5$ is maintained. A gearbox reduces the external mass moment of inertia by a factor of $1/i^2$.

$$\lambda = \frac{J_{extern}}{J_{intern}}$$

J reduced externally at input:

$J'_{external} = J_{external} / i^2$

Simple applications ≤ 10

Dynamic applications ≤ 5

Highly dynamic applications ≤ 1

Mass moment of inertia (*J*)

The mass moment of inertia J [kg/cm²] is a measurement of the effort applied by an object to maintain its momentary condition (at rest or moving).

Mesh frequency (f_z)

The mesh frequency may cause problems regarding vibrations in an application, especially if the excitation frequency corresponds to a intrinsic frequency of the application. The mesh frequency can be calculated for planetary gearboxes from WITTENSTEIN alpha (exception: gearboxes with ratio i = 8) using the formula $f_Z = 1.8 \cdot n_2$ [rpm] and on planetary gearboxes from WITTENSTEIN alpha, is independent of the ratio. If it does indeed become problematic, the intrinsic frequency of the system can be changed or another gearbox (e.g. hypoid gearbox) with a different mesh frequency can be selected.

No-load running torque (T_{012})

The no-load running torque T_{012} is the torque which must be applied to a gearbox in order to overcome the internal friction; it is therefore considered lost torque. The values specified in the catalog are calculated by WITTENSTEIN alpha at a speed of n_1 = 3000 rpm and an ambient temperature of 20 °C.

T_{012}:	0	1→2
	without load	from input side towards output side

Idling torques decrease during operation.

NSF

Lubricants certified as grade H1 by the NSF (National Sanitation Foundation) can be used in the food sector where occasional unavoidable contact with food cannot be excluded.

Operating modes (continuous operation **S1** and cyclic operation **S5**)

Gearboxes are selected depending on whether the motion profile is characterized by frequent acceleration and deceleration phases in → **cyclic operation** (S5) as well as pauses, or whether it is designed for → **continuous operation** (S1), i.e. with long phases of constant motion.

Operating noise (L_{PA})

The gear ratio and speed affect the noise level. As a general rule: A higher speed means a higher noise level, while a higher ratio means a lower noise level. The values specified in our catalog are based on a reference ratio and speed. The reference speed is either n1= 3000 rpm or n1= 2000 rpm depending on the size of the gearbox. You can find ratio-specific values in cymex® – www.wittenstein-cymex.com.

Output shaft revolution (f_α)

Factor f_α determines the number of life time cycles for the required gearbox service life. It describes the number of revolutions at the output used to assess the torque permitted at the output.

→ Refer to this term for further details.

Glossary – the **alpha**bet

Positioning accuracy

The positioning accuracy is determined by the angular deviation from a setpoint and equals the sum of the torsional angles due to load **→(torsional rigidity and torsional backlash)** and kinetics**→(synchronization error) occurring simultaneously in practise** .

Quality control

All Premium and Advanced gearboxes are subject to a final inspection before they leave the WITTENSTEIN alpha factory to ensure that they are all delivered within specification.

Ratio (*i*)

The gear ratio i indicates the factor by which the gearbox transforms the three relevant parameters of motion (speed, torque and mass moment of inertia). The factor is a result of the geometry of the gearing elements (Example: i = 10).

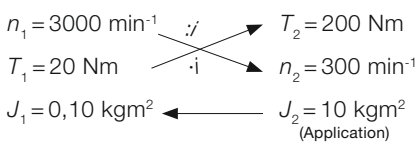

Safety note

For applications with special safety requirements (e.g. vertical axes, clamped drives), we recommend exclusive use of our Premium and Advanced products (excluding V-Drive).

SIZING ASSISTANT

The online SIZING ASSISTANT from WITTENSTEIN alpha allows the efficient selection of a gearbox in seconds. You can use various motor or application entry options to select the right gearbox for your application in seconds (www.sizing-assistant.de).

Speed (*n*)

Two speeds are of relevance when dimensioning a gearbox: the maximum speed and the thermal speed limit at the input. The maximum permissible speed n_{1Max} must not be exceeded because it serves as the basis for dimensioning **→cyclic operation**. The nominal speed n_{1N} must not be exceeded in **→continuous operation**. The thermal speed limit n_{1T} at an ambient temperature of 20° C, is determined by the maximum gearbox temperature of T = 90° C at no-load. As can be seen in the diagram below, the temperature limit is reached more quickly in the presence of an elevated outside temperature. In other words: the nominal input speed must be reduced if the ambient temperature is high. The values applicable to your gearbox are available from WITTENSTEIN alpha on request.

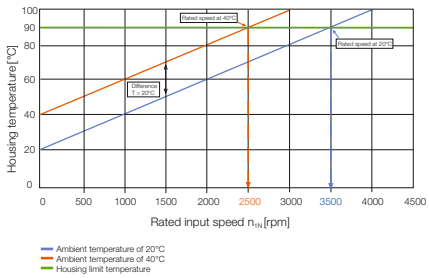

Delivery of speedline®

If necessary, you can receive delivery of standard series in 24 or 48 hours ex works. Outstanding flexibility for fast deliveries at short notice

Synchronization

Synchronization refers to the measurable speed variation between the input and output during one revolution of the output shaft. It is caused by manufacturing tolerances and causes minute angular deviations and ratio fluctuations.

Technical data

You can download further technical data relating to the entire product portfolio from our website

Tilting rigidity

The tilting rigidity C_{2K} [Nm/arcmin] of the gearbox consists of the bending stiffness of the output or pinion shaft and the stiffness of the output bearing. It is defined as the quotient of tilting moment M_{2K} [Nm] and tilting angle Φ [arcmin] ($C_{2K} = M_{2K}/\Phi$).

Tilting torque (M_{2K})

The tilting torque M_{2K} is a result of the **→axial and lateral forces** applied and their respective points of application in relation to the inner radial bearing on the output side.

Torsional backlash (j_t)

Torsional backlash j_t [arcmin] is the maximum angle of torsion of the output shaft in relation to the input. Simply put, the torsional backlash represents the gap between two tooth flanks.

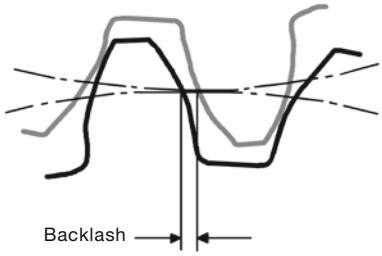

Torsional backlash is measured with the input shaft locked.

The output is then loaded with a defined test torque in order to overcome the internal gearbox friction. The main factor affecting torsional backlash is the face clearance between the gear teeth. The low torsional backlash of WITTENSTEIN alpha gearboxes is due to their high manufacturing accuracy and the specific combination of gear wheels.

Torsional rigidity (C_{t21})

Torsional rigidity [Nm/arcmin] C_{t21} is defined as the quotient of applied torque and resulting torsion angle ($C_{t21} = \Delta T/\Delta\Phi$). It shows the torque required to turn the output shaft by one angular minute. The torsional rigidity can be determined from the **→hysteresis curve**.

Torsional rigidity *C*, angle of torsion Φ

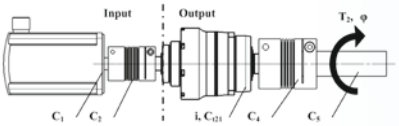

Reduce all torsional rigidity values at the output:

$$C_{(n),out} = C_{(n),in} * i^2$$

with *i* = Gearbox ratio [-]

$C_{(n)}$ = Individual rigidity values [Nm/arcmin]

→ Refer to this term for further details.

Note: The torsional rigidity C_{t21} for the gearbox always relates to the output.

Series connection of torsional rigidity values

$1/C_{tot} = 1/C_{1,out} + 1/C_{2,out} + \ldots + 1/C_{(n)}$

Angle of torsion Φ [arcmin]

$\Phi = T_2 * 1/C_{tot}$
with T_2 = output torque [Nm]

Torque (*M*)

The torque is the actual driving force of a rotary motion. The force and lever arm combine to produce the torque that acts around the axis of rotation. $M = F \cdot l$

Torque ($T_{2\alpha}$)

$T_{2\alpha}$ represents the maximum torque transmitted by the gearbox. This value may decrease depending on the application-specific conditions and the precise evaluation of the movement profile.

Glossary – Formulae

Formulae

Torque [Nm]	$T = J \cdot \alpha$	J = Mass moment of inertia [kgm^2] α = Angular acceleration [1/s^2]
Torque [Nm]	$T = F \cdot l$	F = Force [N] l = Lever, length [m]
Acceleration force [N]	$F_b = m \cdot a$	m = Mass [kg] a = Linear acceleration [m/s^2]
Frictional force [N]	$F_{Reib} = m \cdot g \cdot \mu$	g = Acceleration due to gravity 9.81 m/s^2 μ = Coefficient of friction
Angular speed [1/s]	$\omega = 2 \cdot \pi \cdot n / 60$	n = Speed [rpm] π = PI = 3.14...
Linear speed [m/s]	$v = \omega \cdot r$	v = Linear speed [m/s] r = Radius [m]
Linear speed [m/s] (spindle)	$v_{sp} = \omega \cdot h / (2 \cdot \pi)$	h = Screw pitch [m]
Linear acceleration [m/s^2]	$a = v / t_b$	t_b = Acceleration time [s]
Angular acceleration [1/s^2]	$\alpha = \omega / t_b$	
Pinion path [mm]	$s = m_n \cdot z \cdot \pi / \cos \beta$	m_n = Normal module [mm] z = Number of teeth [-] β = Helix angle [°]

Conversion table

1 mm	= 0.039 in
1 Nm	= 8.85 in.lb
1 kgcm²	= 8.85 x 10^{-4} in.lb.s^2
1 N	= 0.225 lb_f
1 kg	= 2.21 lb_m

Symbol

Symbol	Unit	Designation
C	Nm/arcmin	Stiffness
ED	%, min	Duty cycle
F	N	Force
f_s	–	Load factor
f_e	–	Factor for duty cycle
i	–	Ratio
j	arcmin	Backlash
J	kgm^2	Mass moment of inertia
$K1$	Nm	Factor for bearing calculation
L	h	Service life
L_{PA}	dB(A)	Operating noise
m	kg	Mass
M	Nm	Torque
n	rpm	Speed
p	–	Exponent for bearing calculation
η	%	Efficiency
t	s	Time
T	Nm	Torque
v	m/min	Linear speed
z	1/h	Number of cycles

Index

Index	Designation
Capital letter	Permissible values
Small letter	Actual values
1	Input
2	Output
A/a	Axial
B/b	Acceleration
c	Constant
d	Deceleration
e	Pause
h	Hours
K/k	Tilting
m	Mean
Max/max	Maximum
Mot	Motor
N	Nominal
Not/not	Emergency stop
0	No load
Q/q	Lateral
t	Torsional
T	Tangential

Ordering code – Planetary gearbox

SP | 100 | S – M | F | 1 – 10 – 0 | G | 1 – 2 | S

Product type
SP+
TP+
DP+
HDP+

Size
060 – 240
004 – 4000
004 – 050
010 – 050

Ratio

Number of stages
1 = 1
2 = 2
3 = 3

Generation
2

Motor connection
A = Optimized mass inertia
K = Coupling
N = Keyed clamping hub socket
S = Clamping hub socket

Gearbox model
F = Standard
A = HIGH TORQUE
C = HIGH SPEED

Backlash
1 = Standard
0 = Reduced

Gearbox variant
M = Motor-mounted
S = Self-contained

Clamping hub diameter
(see table)
For self-contained version:
input shaft shape

Characteristic
C = Reverse centering
E = ATEX
F = Food grade lubrication
G = Grease
H = Food-grade grease
L = Friction optimized
R = Flange with slotted holes
S = Standard
W = Corrosion resistant

Output shape (Shaft)
0 = Smooth shaft
1 = Shaft with key
2 = Splined shaft (DIN 5480)
3 = System output
4 = Other
5 = Blind hollow shaft

Output shape (Flange)
0 = Flange
3 = System output
4 = Other

Mounting positions and clamping hub diameters

B5
Horizontal

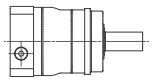

V1
Output vertical downwards

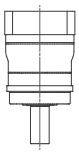

V3
Output vertical upwards

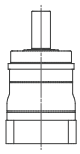

S
Can be tilted ±90° from a horizontal position

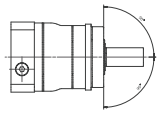

Clamping hub diameter
(see technical data sheet for possible diameters)

Code letter	mm	Code letter	mm
B	11	I	32
C	14	K	38
E	19	M	48
G	24	N	55
H	28	O	60

Intermediate sizes possible using bushings with a minimum thickness of 1 mm.

For information purposes only – not required when placing orders!

Exceptions:
- The mounting position of TP+ 2000 / 4000 must be specified.
- DP+ / HDP+ products are designed for mounting position B5 as standard!

If the mounting position is different, contact WITTENSTEIN alpha without fail.

Ordering code – Hypoid- / Bevel gearboxes

SPK+ | 100 | S – M F 2 – 50 – 0 E 1 – 1 K 0 1

Product type
SK+
SPK+
SC+
SPC+
HG+
TK+
TPK+
TPC+

Size
060 – 180
075 – 240
060 – 180
060 – 180
060 – 180
004 – 110
010 – 4000
004 – 180

Ratio

Number of stages
1 = 1
2 = 2
3 = 3
4 = 4

Gearbox model
F = Standard
A = HIGH TORQUE

Gearbox variant
M = Motor-mounted

Characteristic
B = Modular output combination
E = ATEX
F = Food grade lubrication
S = Standard
W = Corrosion resistant

Output shape (Shaft)
0 = Smooth shaft
1 = Shaft with key
2 = Splined shaft (DIN 5480)
3 = System output
4 = Other
5 = Blind hollow shaft

Clamping hub diameter
(see table)

Output shape (Flange)
0 = Flange
3 = System output
4 = Other
5 = Flanged hollow shaft

Output shape (Hollow shaft)
5 = Hollow shaft interface / Hollow shaft
6 = Hollow shaft interface / Hollow shaft interface

Backlash
1 = Standard
0 = Reduced

Generation
1

Motor connection
K = Coupling
S = Clamping hub socket

Number of input stages
0 = 0
1 = 1

Number of output stages
0 = 0
1 = 1
2 = 2

Mounting positions

B5 / V3
Output horizontal / motor shaft vertical upwards

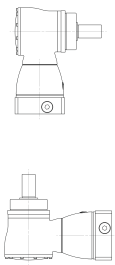

B5 / V1
Output horizontal / motor shaft vertical downwards

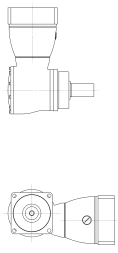

V1 / B5
Output vertical downwards / motor shaft horizontal

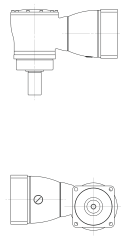

V3 / B5
Output vertical upwards / motor shaft horizontal

B5 / B5
Output horizontal / motor shaft horizontal

Please note the orientation when placing your order.

Exceptions:
- The mounting position of TPK+ 2000 / 4000 must be specified.
- If the mounting position is different, contact WITTENSTEIN alpha without fail.

Characteristic: Modular output combination (B)

HG+ / SK+ / SPK+ / TK+ / TPK+

SK+ | 100 | **B** – M F 1 – 10 – **G** E 1 / motor

Characteristic: **B = Modular output combination**
S = Standard

Output shape

When selecting an output combination from the modular system, please select the letter „B“ as the characteristic in the ordering code. The digit for the required output shape is the modular matrix system.
Example: If you opt for an SK+ with a smooth shaft and require an additional output in the form of a shaft with key, then select the letter „G“ and enter in the order key under „Output shape“.

	Backward / Front	Smooth shaft	Shaft with key	Hollow shaft interface	Hollow shaft	Cover
SK+ / SPK+	Smooth shaft	**D**	**G**	**A**	**–**	**0***
SK+ / SPK+	Shaft with key	**E**	**H**	**B**	**–**	**1***
SK+ / SPK+	Splined shaft (DIN 5480)	**F**	**I**	**C**	**–**	**2***
SPK+	Blind hollow shaft	**O**	**P**	**N**	**–**	**5***
TK+	Flanged hollow shaft	**D**	**G**	**6**	**5***	**0**
TPK+	Flange	**D**	**G**	**6**	**–**	**0***
HG+	Hollow shaft	**D**	**G**	**6***	**5***	**0**

* Standard version: please specify characteristic „S“ in the order code

Ordering code – Worm gearboxes

VS+ | 050 | S – M F 1 – 10 – 0 E 1 – 1 K – AC | 1

Product type
VH+
VS+
VT+

Size
040 – 100
050 – 100
050 – 100

Characteristic
F = Food grade lubrication
S = Standard
W = Corrosion resistant

Gearbox variant
M = Motor-mounted

Gearbox model
F = Standard

Number of stages
1 = 1
2 = 2

Ratio

Output shape (Shaft)
0 = Smooth shaft
1 = Shaft with key
2 = Splined shaft (DIN 5480)
3 = System output
4 = Other
D = Smooth shaft / Smooth shaft
H = Shaft with key / Shaft with key

Output shape (Flange)
4 = Other
5 = Flanged hollow shaft

Output shape (Hollow shaft)
1 = Keyed hollow shaft / Keyed hollow shaft
4 = Other
6 = Hollow shaft interface / Hollow shaft interface

Clamping hub diameter
(see table)

Backlash
1 = Standard
0 = Reduced

Generation
1

Motor connection
K = Coupling
S = Clamping hub socket

Mounting position

Number of shrink discs
0 = 0
1 = 1
2 = 2

Mounting positions and clamping hub diameters

Mounting position (only relevant for oil volume)

Output side A:
View of motor interface,
Output left
Only valid for VS+, VT+

AC

AF

AD

AG

AE

Output side B:
View of motor interface,
Output right
Only valid for VS+, VT+

BC

BF

BD

BG

BE

For VH+ and VS+ with dual-shaft output or hollow shaft, A and B in the mounting position must be replaced with 0 (zero).

Clamping hub diameter

(see technical data sheet for possible diameters)

Code letter	mm
B	11
C	14
E	19
G	24
H	28

Code letter	mm
I	32
K	38
M	48
N	55
O	60

Intermediate diameters possible in combination with a bushing with a minimum thickness of 1 mm.

YOUR NOTE

WITTENSTEIN | alpha

WITTENSTEIN Inc. · 1249 Humbracht Circle · Bartlett, IL 60103 · USA · Phone 1-630-540-5300

Subject to technical changes. alpha Advanced Line

WITTENSTEIN alpha – Intelligent drive systems

www.wittenstein-us.com

The entire world of drive technology – Catalogs available on request or online at www.wittenstein-us.com/catalogs

alpha Advanced Line. Maximum power density and outstanding positioning accuracy for complex applications.

alpha Basic / Value Line. Reliable, flexible and economical solutions for a wide range of applications.

alpha Linear Systems. Precise, dynamic system solutions for every requirement.

alpha Mechatronic Systems. Energy-efficient, versatile and flexible mechatronic drive systems.