ORDER NO	130091-0049
WOODHEAD ENG. NO	990-106US
WIRE GAUGE	14
CONDUCTORS	3
AMPERAGE	11A
WORKING CORD	45 FT. YELLOW
CORD TYPE	SJTOW
CONSTRUCTION	STEEL
PAINT	YELLOW POWDER COAT
REEL ENCLOSURE RATING	INDOOR
RETRACTION WEIGHT	2.5 LB [1.133 KG]

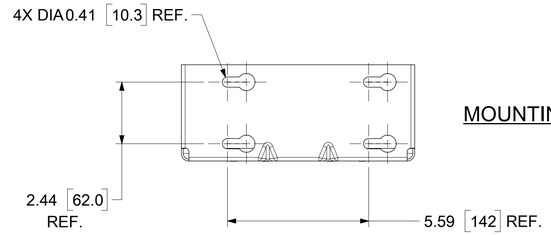

MOUNTING BASE

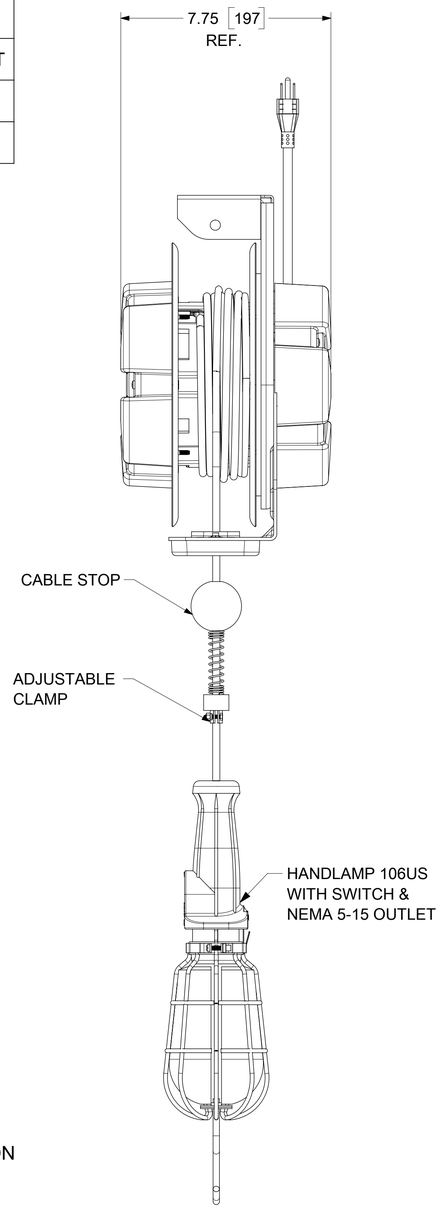

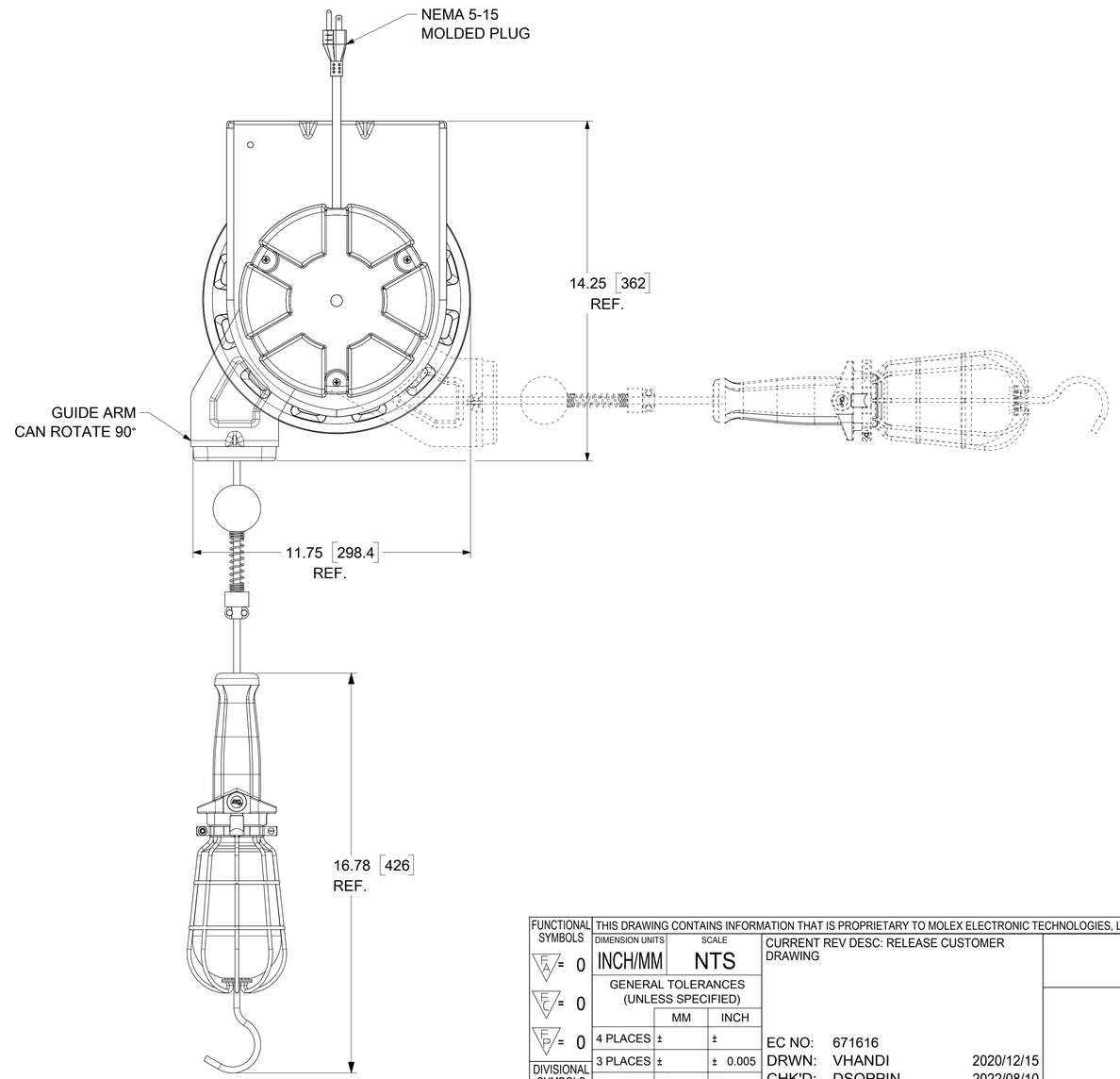

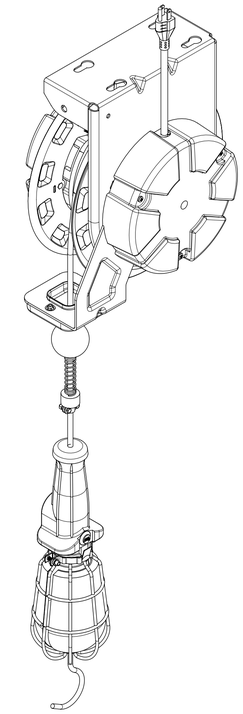

NOTES:

1. CABLE GUIDE IS ADJUSTABLE - DUAL POSITION
2. RATCHET LOCK IS EASY TO DISENGAGE FOR CONSTANT TENSION
3. REEL CANNOT BE "LOCKED OUT" AT FULL TENSION
4. CABLE STOP INCULDED

THIS DRAWING CONTAINS INFORMATION THAT IS PROPRIETARY TO MOLEX ELECTRONIC TECHNOLOGIES, LLC AND SHOULD NOT BE USED WITHOUT WRITTEN PERMISSION

FUNCTIONAL SYMBOLS: FA = 0, FC = 0, FP = 0
DIVISIONAL SYMBOLS

DIMENSION UNITS: INCH/MM
SCALE: NTS

GENERAL TOLERANCES (UNLESS SPECIFIED)

	MM	INCH
4 PLACES	±	±
3 PLACES	±	± 0.005
2 PLACES	± 0.13	± 0.01
1 PLACE	± 0.25	± 0.02
0 PLACES	±	±
ANGULAR TOL	± 0.5 °	

DRAFT WHERE APPLICABLE MUST REMAIN WITHIN DIMENSIONS

CURRENT REV DESC: RELEASE CUSTOMER DRAWING

EC NO: 671616
DRWN: VHANDI 2020/12/15
CHK'D: DSOPPIN 2022/08/10
APPR: HKNEELAND 2022/08/10

INITIAL REVISION:
DRWN: VHANDI 2020/12/15
APPR: HKNEELAND 2022/08/10

molex

CORD REEL W/106US LAMP
45' #14-3 SJTOW NEMA 5-15 PLUG

PRODUCT CUSTOMER DRAWING

DOCUMENT NUMBER	DOC TYPE	DOC PART	REVISION
1300910049	PSD	000	A

THIRD ANGLE PROJECTION	DRAWING	SERIES	MATERIAL NUMBER	CUSTOMER	SHEET NUMBER
	D-SIZE	130091	SEE TABLE	GENERAL MARKET	1 OF 1

DOCUMENT STATUS	P1	RELEASE DATE	2022/08/10 17:26:35

FORMAT: PS-SIZE-B-2010-D
REVISION: D
DATE: 2020/01/14