EUROCUBE

Four-Hole Bathtub Faucet with Handshower

MODEL # 19897001

Pure Freude an Wasser

GROHE

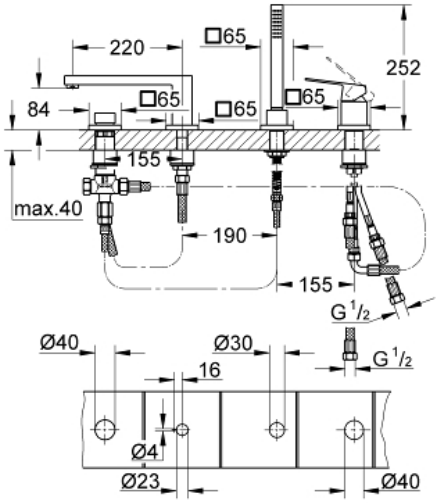

Product Description:
EUROCUBE
Four-Hole Bathtub Faucet with Handshower

Standard Specification:
- **GROHE SilkMove** ceramic cartridge
- **GROHE StarLight** chrome finish
- Consisting of:
- Pre-assembled spout mounting
- Single lever valve operating element
- Metal lever handle
- Bath inlet with flow control
- Bath/shower diverter
- Hand shower Euphoria Cube+ (27 888 000) 1.75 gpm
- 79" (2000mm) metal shower hose
- Stainless steel flex lines
- Check valve included to prevent backflow
- Min. recommended pressure: 15 psi (1.0 bar)

Applicable Codes & Standards:
- Energy Policy Act of 1992
- ASME A112.18.1/CSA B125.1
- ICC/ANSI A117.1
- LOGO CEC

Color:
❑ 19897001 StarLight Chrome