PARKFIELD

Widespread 2-Handle Bidet Faucet

MODEL # 24033000

Pure Freude an Wasser

GROHE

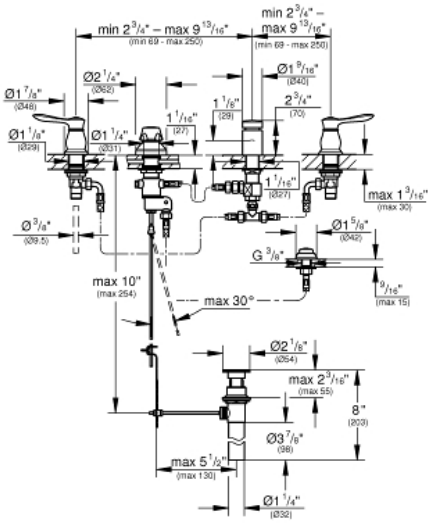

Product Description:
PARKFIELD
Widespread 2-Handle Bidet Faucet

Standard Specification:
- **GROHE StarLight** chrome finish
- 1/2" (13mm) ceramic cartridge (90° turn)
- Vacuum breaker
- Diverter for bidet spray / rim flushing
- Pressure resistant flexible connection hoses (between spout and side valves)

Applicable Codes & Standards:
- Energy Policy Act of 1992
- ASME A112.18.1/CSA B125.1
- US Federal and State material regulations
- ICC/ANSI A117.1

Color:
❑ 24033000 StarLight Chrome