TSP-2025

TRAP SEAL PRIMERS CATALOG 2025

(May 15, 2025)

TRAP SEAL PRIMERS AND WATER HAMMER ARRESTORS

PRESSURE DROP ACTIVATED - ELECTRONIC - FLOOR DRAIN SEALS

LIT-062

PICTORIAL INDEX

M-500-NPB (page 4)	**M3-500-NPB** (page 4)	**MI-TSP-NPB** (page 5)	**MI-DU** (page 5)	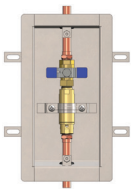 **MR-500-NPB-ENC** (page 6)
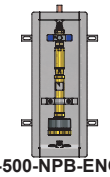 **MR-500-NPB-ENC-AG** (page 6)	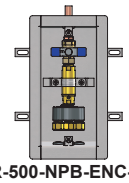 **MR-500-NPB-ENC-DU** (page 6)	**ACCESS DOORS** (page 7)	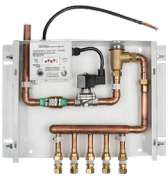 **MI-100** (pages 9, 13-16)	**MI-200** (page 10)
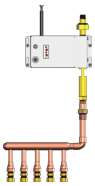 **MI-300** (page 10)	**MI-300-BP** (page 11)	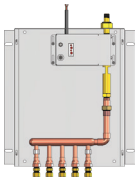 **MI-300-ENC** (page 11)	**MI-300-DU** (page 12)	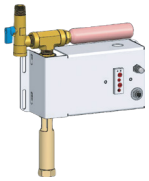 **MI-350-WHA** (page 12)
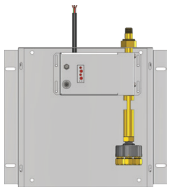 **MI-350-DU** (page 13)	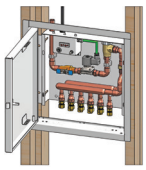 **MI-100-MFRU** (page 16)	**DIELECTRIC NIPPLES** (page 17)	**AIR GAP** (page 17)	**MI-700** (page 18)
WATER CLOSET TRAP PRIMER (page 18)	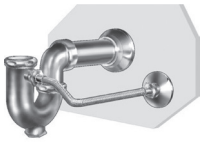 **MI-750** (page 18)	**MI-600-50** (page 19)	**MI-600** (page 19)	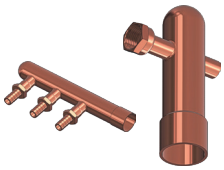 **COPPER MANIFOLDS** (pages 20, 21)
MI-GARD (pages 22-23)	**CL-NPB** (page 24)	**WHB** (page 25)	**MI-TEMP-NPB** (page 27)	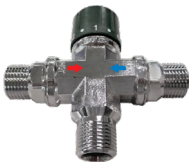 **THERMOSTATIC MIXING VALVES** (page 27)
CROSS REFERENCE (pages 34, 35)	**TERMS AND CONDITIONS** (page 36)	**MIFAB® PRODUCT BOOKLETS** (page 37)		

"After 7 years and thousands of MR-500s purchased we have never had one fail."

– Nolan Johnson, Purchasing Manager, Hubbard Supply, Inc., Fayetteville, NC

CALIFORNIA PROPOSITION 65 WARNING. This product contains chemicals known to the State of California to cause cancer and birth defects or other reproductive harm.

Design and dimensions are subject to modification. Prices do not include applicable taxes. Visit www.mifab.com for the most recent product information.

MIFAB®, Inc., 1321 West 119th Street, Chicago, Illinois 60643-5109, USA
Toll Free: 1-800-465-2736, Fax: 1-773-341-3049
sales@mifab.com Canada Toll Free: 1-800-387-3880

All sales subject to MIFAB's® Terms and Warranties. Please refer to page 36.

MIFAB® TRAP SEAL PRIMER SELECTION GUIDE

Trap seal primers are a necessity where floor drains are infrequently used and in areas such as mechanical and service rooms. In surprisingly little time, evaporation of water in floor drain traps will allow sewer gas to enter the interior of the building. Today's typical method of cleaning floors produces very little water that runs into floor drains. In mechanical rooms, warm dry conditions and air pressure changes caused by HVAC equipment may also serve to compromise the water seal. Trap seal primers provide a supply of water to replenish the deep seal or "P" trap of a drain to prevent sewer or potentially explosive methane gas from entering the area through the floor drains. They are installed on the potable cold water supply line, and react to water flowing in the line to trigger, either by turbulence or pressure drop. Once a triggering event occurs, the primer will release water that is piped to a trap primer connector on or near the "P" trap being maintained. The selection and specification of trap seal primers merits careful consideration. Outlined below are some of the factors to be aware of when planning to use trap seal primers effectively. Installation and local code requirements must be taken into account when specifying trap seal primers. The A.S.S.E. (American Society of Sanitary Engineers) trap seal primer standard #1018 is the key Standard that relates to trap seal primers. MIFAB's M-500-NPB and MI-TSP-NPB trap seal primers are tested and third party certified to the A.S.S.E. 1018 Standard.

MIFAB's trap seal primers have been tested and certified to comply with the low lead plumbing law. These products have been verified with weighted average lead content of less than .25% of the wetted surface.

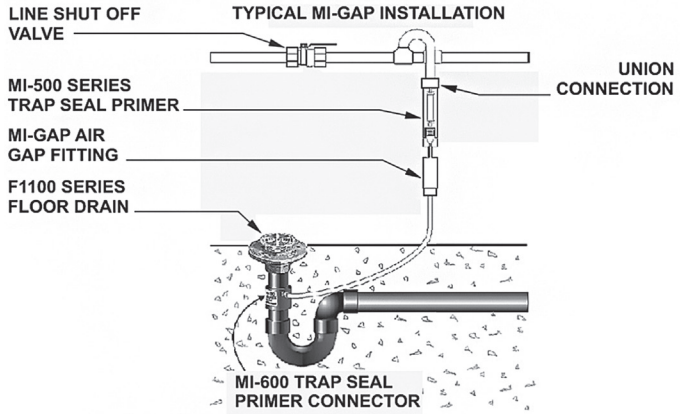

MI-TSP-1-NPB ILLUSTRATED (Continuous flow)

TYPES OF TRAP SEAL PRIMERS

There are four main types of trap seal primers. They include: continuous flow, pressure drop activated, flush valve operated and electronic.

CONTINUOUS FLOW TRAP SEAL PRIMERS

Continuous flow trap seal primers are the original style of trap seal primers. They are typically constructed of cast brass or bronze with a neoprene rubber poppet float on the inside that rises upward as water flows through the primer. When the poppet rises off of its seat, water flows from the primer, through the plumbing line connection, and into the floor drain trap. They are manufactured in either sweat, threaded or union connections and should be installed in a vertical position within the horizontal water supply line, at least ten inches above the floor drain trap that it serves. Continuous flow trap seal primers do not have any method of screening out line debris. This often results in their clogging and either flowing water continuously, or not at all. The volume of water that they discharge is directly related to the amount of water that continuously flows through them. For these reasons, pressure drop activated trap seal primers have become the selection of choice for specifiers.

ELECTRONIC TRAP SEAL PRIMERS

MIFAB's MI-100 Series of electronic trap seal primers are a pre-assembled electronic trap seal primer system programmed to maintain the water seal of floor drain traps. The device is made with an A.S.S.E. approved vacuum breaker, solenoid valve operated by a timer, shut off valve for maintenance & a manifold system to distribute water evenly to the desired floor drain traps. The design is programmed at MIFAB's factory with standard flush times. These flush times can be adjusted by the operator in order to discharge more or less water to the floor drain traps, depending on the installation and climate conditions. Applications include commercial buildings such as schools, hospitals, manufacturing facilities, & any other buildings that require floor drain trap seal protection. The distribution of water from the MI-100 to the traps avoids possible odors coming from the drains.

CALIFORNIA PROPOSITION 65 WARNING. This product contains chemicals known to the State of California to cause cancer and birth defects or other reproductive harm.

MIFAB® TRAP SEAL PRIMER SELECTION GUIDE (Cont'd)

MR-500-NPB ILLUSTRATED
(Pressure drop activated)

PRESSURE DROP ACTIVATED TRAP SEAL PRIMERS

Pressure drop activated trap seal primers are typically manufactured out of brass. They are made with a 1/2" M.I.P. inlet connection and a 1/2" F.I.P. outlet connection. They have an interior cartridge that seals when the line pressure is in a static state. When the line pressure drops as little as three p.s.i. (pounds per square inch) (caused by the flushing of a toilet, opening of a faucet, or any draw of water from the water supply line within a close distance to the primer) the interior cartridge will rise due to the pressure differential within the primer and a metered amount of water is discharged under pressure into the plumbing line connected to the floor drain trap. Pressure drop activated trap seal primers are supplied with a fine mesh stainless steel filter that will screen out debris to ensure that the cartridge is not clogged and that the water deliveries are uniform. The filter is easily accessible for quick cleaning or replacement. Three different cartridges offer three different water deliveries into the floor drain, depending on the number of floor drain traps served and the evaporation rate of the water in the floor drain traps. Assuming line pressure of 60 p.s.i, and a line pressure drop of 3 p.s.i., MIFAB's MR-500-NPB trap seal primer will discharge a one half ounce of water, the M1-500-NPB and M3-500-NPB will discharge a full ounce of water and the M2-500-NPB will discharge a one quarter ounce of water into the floor drain trap every time the line pressure changes by 3 p.s.i.

> *"I stock the MR-500-NPB because it's a great product and I don't get any call backs. It's a great seller."*
>
> – Dave Brown, Owner, Ken Brown and Sons, New Orleans, LA

MI-701 ILLUSTRATED
(Flush valve operated)

FLUSH VALVE TRAP SEAL PRIMERS

Flush valve trap seal primers are installed below the flush valve and direct an amount of waste water discharged from the flush valve into a tube that connects to the floor drain trap to maintain the water seal. Their advantages are that the water used is already consumed by the flush valve operation, and this type of primer has no moving parts. Their disadvantage is that their location is determined by the location of the fixtures which may be too far away from the floor drains to be practical; unlike supply line mounted trap seal primers which can be more easily installed close to the floor drain trap to be primed. Many installations cannot use flush valve trap seal primers because the floor drain traps are too far away to be reached by the flush valve trap seal primer.

The following link is a CEU accredited presentation on why trap seal primers are required by the Plumbing Code and the different types of trap seal primers.

https://bit.ly/TSP-CEU

CALIFORNIA PROPOSITION 65 WARNING. This product contains chemicals known to the State of California to cause cancer and birth defects or other reproductive harm.

Design and dimensions are subject to modification. Prices do not include applicable taxes. Visit www.mifab.com for the most recent product information.
MIFAB®, Inc., 1321 West 119th Street, Chicago, Illinois 60643-5109, USA
Toll Free: 1-800-465-2736, Fax: 1-773-341-3049
sales@mifab.com Canada Toll Free: 1-800-387-3880
All sales subject to MIFAB's® Terms and Warranties. Please refer to page 36.

MIFAB® TRAP SEAL PRIMER SELECTION GUIDE (Cont'd)

INSTALLATION CONSIDERATIONS

Continuous flow and pressure drop activated trap seal primers should be installed at least 12" above the floor drain traps for every 20 feet of distance to the drain to ensure that there is enough of a slope for the discharged water to flow to the traps. MIFAB® recommends pre-priming the traps, as trap seal primers are meant to replace trap water loss through evaporation, etc. Pressure drop activated primers should be connected to the water supply line with a vertical elbow to limit line debris from entering and contaminating the valve. The primer itself should be installed vertically. Access doors should always be specified to provide easy access to all trap seal primers. Trap seal primers have moving parts that will eventually wear or be compromised by line debris even in the best of circumstances. The access doors specified should be large enough to provide "hand access" to the trap seal primer, related accessories and line shut off valve. For quick and easy repair, a line shut off valve and union connections are recommended directly before the trap seal primer on the water supply line. The closing of this valve will facilitate the cleaning and maintenance of the primer without having to separately shut off the building's water supply. Water supply lines should be flushed at least five times before the trap seal primers are initially installed to ensure that debris will not enter the primers and negatively affect their performance. Pipe dope and paste should never be used when installing trap seal primers in water supply lines because the fine residue from these adhesives will enter the trap seal primers and clog the cartridges. Install the trap seal primer as close to the source of the pressure drop as possible. Fixtures with a water restriction device may not cause a large enough pressure drop to activate the trap seal primer.

AIR GAP FITTING

Many local codes require the use of an air gap fitting underneath the trap seal primer (see MIFAB's MI-GAP-NPB product). The purpose of an air gap fitting is to provide a vertical space that is twice the diameter of the water supply connection in order to ensure positive protection against backflow. ANSI / ASME Standard A112.1.2 air gap in plumbing systems is written for the application of air gap fittings. It is recommended that air gaps be specified for use in areas where splashing water from the air gap will not be objectionable or cause damage.

DISTRIBUTION UNITS

Distribution units can be installed underneath pressure drop activated trap seal primers to distribute water to up to ten floor drain traps that are in close proximity to each other. (See MIFAB's MI-DU product) Typically, distribution units are used when a men and women's restroom are located side by side with a common pipe chase between them. In this instance, one trap seal primer with a distribution unit dialed to the 2 setting can be used to service both floor drain traps. This eliminates a second costly installation procedure, shut off valve, access door and air gap fitting. MIFAB's distribution units are engineered so that they do not need to be installed level to distribute water evenly and can be adjusted to serve either two, three or four floor drain traps with a single unit. Up to ten floor drain traps can be served by having one main distribution unit feed others below it. Contact MIFAB® for layout information on distribution units serving multiple drains.

LINE SHUT OFF VALVE

The closing of this valve will facilitate the cleaning and maintenance of the primer without having to separately shut off the building's water supply. Water supply lines should be flushed several times before the trap seal primers are initially installed to ensure that debris will not enter the primers and negatively affect their performance. Pipe dope and paste should never be used when installing trap seal primers in water supply lines because the fine residue from these adhesives will enter the trap seal primers and clog the cartridges. Once installed, pressure drop activated trap seal primers should be cycled at least five times to ensure reliable operation. Quickly opening and closing the line shut off valve can accomplish this. Four view holes located directly across from each other at the bottom of the pressure drop activated trap seal primers allow easy observation of water discharging into the make up line that leads to the floor drain trap.

MI-GAP-NPB ILLUSTRATED

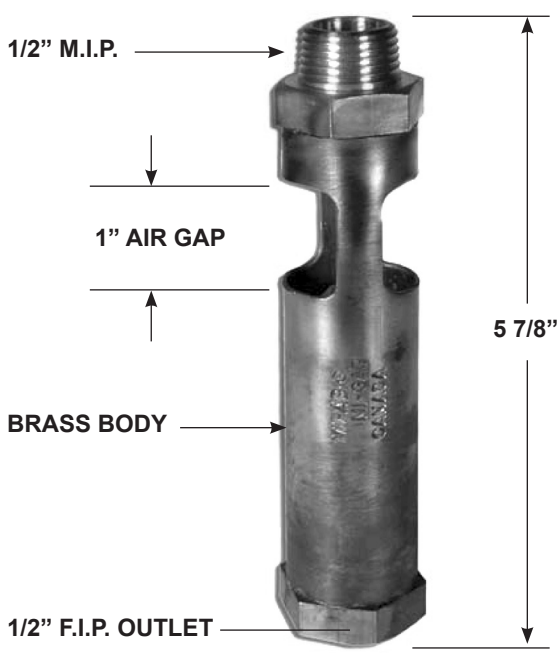

CALIFORNIA PROPOSITION 65 WARNING. This product contains chemicals known to the State of California to cause cancer and birth defects or other reproductive harm.

M-500-NPB PRESSURE DROP ACTIVATED TRAP SEAL PRIMER

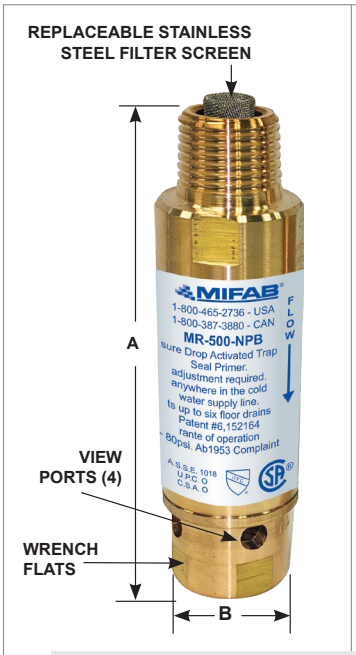

Note: See pages 29 and 30 for CSA and IAPMO approval certificates.

3 P.S.I PRESSURE DROP

Only a three p.s.i. line pressure drop is required to activate the primer, compared to five or ten p.s.i. by others. Lower water voume fixtures and faucets has resulted in lower line pressure drops. A three p.s.i. performance point ensures reliable water delivery to maintain the trap seal.

NO PRECHARGE

MIFAB's trap seal primers can be disassembled in the field for easy cleaning and repair, without risk of losing a precharge.

VIEW HOLES

Four view holes permit easy inspection of water delivery. The holes are across from each other, enabling light at the opposite end to illuminate the performance of the primer.

SEDIMENT FILTER

A replacement stainless steel sediment filter prevents line debris from entering the primer. This can be replaced after wear and build up of debris to ensure maximum life and performance of the primer.

NO ADJUSTMENTS (except for M3-500-NPB)

The replaceable and repairable cartridge tubes inside of the body are factory engineered to deliver enough water to service three, six or ten floor drain traps without adjustment. This eliminates confusion during field installation.

The M-500 Series of trap seal primers are tested and third party listed to the A.S.S.E. 1018 Standard.

LEAD FREE UPC C ®

All four models are listed with I.A.P.M.O. and C.S.A. (File #110892_0_000) and are tested and certified to the A.S.S.E. Standard 1018 and are so marked. U.S. Patent # 6,152,164

"The MR-500 is the most practical trap primer on the market. Never any failures and the quality is second to none. MIFAB® always sees to it that orders are shipped promptly and that you have no need to worry about failure."

– Tommy Honeycutt, Tolar Supply Inc., Fayetteville , NC

M-500 SERIES

MODEL NO.	LIST PRICE	A	B	PIPE FLATS	DRAINS SERVED	WATER OUTPUT
MR-500-NPB	$127.30	4-1/8"	1-1/4"	1-1/8"	6	1/2 ounce
M1-500-NPB	$138.40	4-1/8"	1-1/4"	1-1/8"	10	1 ounce
M2-500-NPB	$132.60	4-1/8"	1-1/4"	1-1/8"	3	1/4 ounce
M3-500-NPB	$138.40	4-1/8"	1-1/4"	1-1/8"	10	1 ounce
MR-500-SS (Stainless Steel)	$250.00	4-1/8"	1-1/4"	1-1/8"	6	1/2 ounce

M-500 OPTIONAL VARIATIONS

MODEL NO.	DESCRIPTION	SHIP WEIGHT	CARTON QTY.	CARTON WEIGHT	REPLACEMENT FILTER SCREEN (-RF)	REPLACEMENT CARTRIDGE (-RC)
MR-500-NPB	Up to 6 drains	.75 lbs.	25	18.35 lbs.	$55.75	$72.00 (Green Cartridge)
M1-500-NPB	Up to 10 drains	.75 lbs.	25	18.35 lbs.	$55.75	$82.25 (Red Cartridge)
M2-500-NPB	Up to 3 drains	.75 lbs.	25	18.35 lbs.	$55.75	$76.50 (Black Cartridge)
M3-500-NPB	Up to 10 drains	.75 lbs.	25	18.35 lbs.	$55.75	No Cartridge
M-500-UN	Union connection				$55.75	
M3-500-NPB	Type 316 Stainless Steel body, Up to 6 drains	.75 lbs.	25	18.35 lbs.	$55.75	$72.00 (Green Cartridge)

Note: See page 33 for installation, operation and maintenance instructions.

M-500-UN FOR OPTIONAL UNION CONNECTION USE SUFFIX (-UN). READ DESCRIPTION BELOW.

The union connection (Model # M-500-UN) permits easy access to the top of the trap seal primer for cleaning and maintenance. Simply solder the pipe to the top of the union nut. Screw the union nut onto the top of the MR-500-NPB, M1-500-NPB, M2-500-NPB or M3-500-NPB trap seal primer during installation. When cleaning or maintenance of the trap seal primer is required. one can easily unscrew the union nut to access the trap seal primer and not have to cut the water supply pipe to access the trap seal primer. List Price of the -UN is **$31.50**

CALIFORNIA PROPOSITION 65 WARNING. This product contains chemicals known to the State of California to cause cancer and birth defects or other reproductive harm.

CONTINUOUS FLOW TRAP SEAL PRIMER — MI-TSP-NPB

MI-TSP-NPB

MI-TSP-1-NPB
1/2" SWEAT CONNECTION

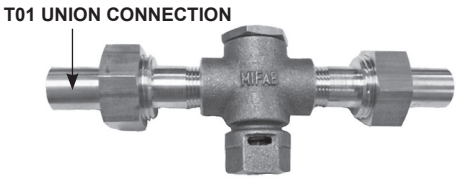

MI-TSP-3-NPB
THREADED WITH UNION CONNECTIONS

MI-TSP-2-NPB
(NPT) THREADED

MI-TSP-NPB							
MODEL NO.	DESCRIPTION	LIST PRICE	ADD FOR: CHROME PLATED (-CP)	SHIP WEIGHT (Lbs.)	CARTON QTY.	WEIGHT (Lbs.)	REPAIR KIT (-RK)
MI-TSP-1-NPB	1/2" Sweat	**SEE MPB PRICE BOOK**	SEE MPB PRICE BOOK	1.0	20	20	SEE MPB PRICE BOOK
MI-TSP-2-NPB	1/2" Threaded	**SEE MPB PRICE BOOK**	SEE MPB PRICE BOOK	1.0	20	20	SEE MPB PRICE BOOK
MI-TSP-3-NPB	1/2" Threaded with union connections	**SEE MPB PRICE BOOK**	SEE MPB PRICE BOOK	1.0	20	20	SEE MPB PRICE BOOK

Part number for **MI-TSP-1,2,3-NPB**, repair kit is **MI-TSP-RK**. (**SUFFIX - RK**)

The MI-TSP Series of trap seal primers are tested and third party listed to the A.S.S.E. 1018 Standard.

Note: See page 31 for CSA approval certificate.

LEAD FREE UPC C ®

TRAP SEAL PRIMER DISTRIBUTION UNIT — MI-DU

MIFAB's MI-DU trap seal primer distribution unit is engineered to receive a metered amount of water **from a trap seal primer** and distribute the water equally to either two, three or four floor drain traps. Choose from either 3/8" copper tube (-500) or 1/2" copper tube (-625) compression connections by indicating suffix -500 (3/8") or -625 (1/2"). The lid of the distribution unit has the numbers "2", "3" and "4" marked on it. The body of the distribution unit has a guide marker on the top of the body. The numbers and the guide marker are positioned by removing the three screws in the lid of the unit and rotating the lid to match the appropriate numbers with the guide marker to provide priming for the desired number of drains. The underside is marked with numbers 1-4 for ease in determining which ports will receive the water. Do not over torque the three lid screws when securing the lid back to the body. It is not necessary to install MIFAB's distribution perfectly level. The unique design will distribute water uniformly when out of level up to 5 degrees.
Models MI-DU-500 and MI-DU-625 are tested and certified to the I.A.P.M.O. I.G.C Standard 178-2002 (R2014) entitled "I.A.P.M.O. Guide Criteria for Gravity Fed Water Distribution Manifolds for Trap Primers". U.S. Patent # 6,142,178.

MI-DU-500 / 625 ILLUSTRATED

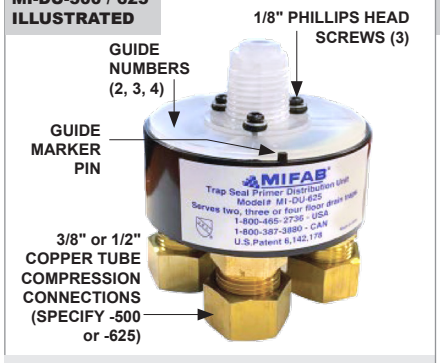

Use 1/2" hard copper or 1/2" pex with MI-DU-625
Use 3/8" Type K, soft copper with MI-DU-500

MI-DU-U ILLUSTRATED

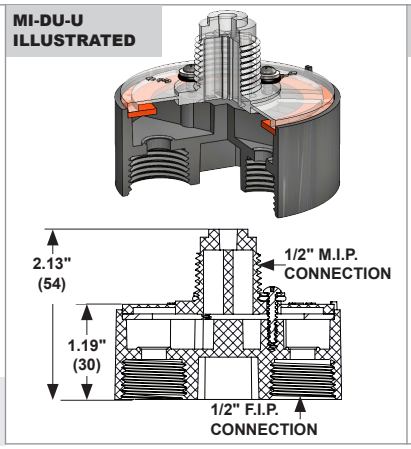

TYPICAL INSTALLATION

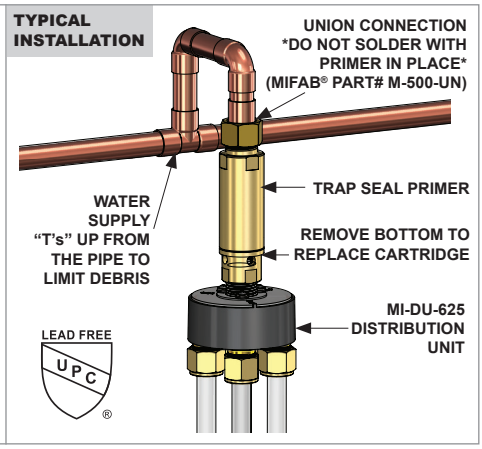

MI-DU						
MODEL NO.	DESCRIPTION	LIST PRICE -500 (3/8" copper tube compression)	LIST PRICE -625 (1/2" copper tube compression)	SHIPPING WEIGHT	CARTON QTY.	CARTON WT.
MI-DU	Trap Seal Primer Distribution unit that serves two, three or four floor drain traps.	**$74.15** (for 3/8" copper)	**$80.00** (for 1/2" copper)	.75 lbs.	6	4.5 lbs.
MI-DU-U	Trap Seal Primer Distribution unit that serves two, three or four floor drain traps, with F.I.P. connections	**$74.15**		.50 lbs.	6	3.0 lbs.

CALIFORNIA PROPOSITION 65 WARNING. This product contains chemicals known to the State of California to cause cancer and birth defects or other reproductive harm.

MR-ENC — TRAP SEAL PRIMER IN A BOX WITH SHUT OFF VALVE

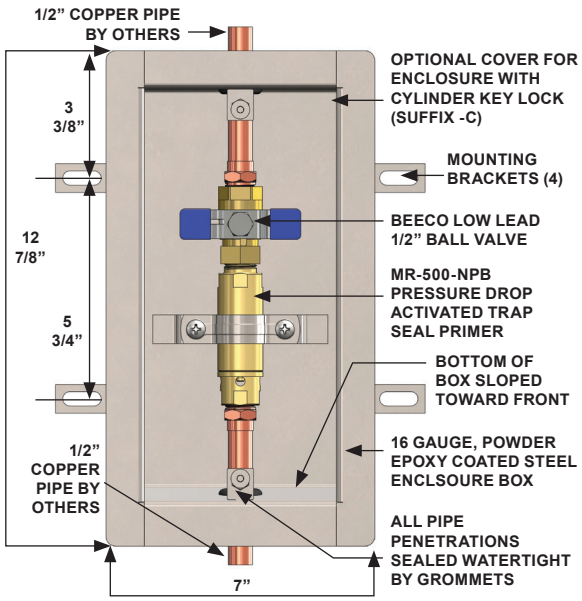

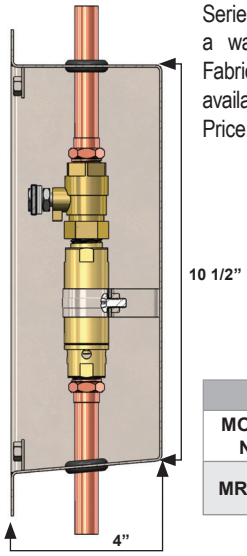

The MR-ENC Series are designed to enclose an MR Series pressure drop activated trap seal primer within a wall for convenient inspection and maintenance. Fabricated 16 gauge stainless steel enclosures are available. Specify Suffix -SS and add **$132.50** to the List Price.

MR-ENC			
MODEL NO.	DESCRIPTION	LIST PRICE	SHIPPING WT.
MR-ENC	Trap Primer in Box	$738.25	10 lbs.

MR-ENC-AG — TRAP SEAL PRIMER IN A BOX WITH SHUT OFF VALVE, AIR GAP AND DISTRIBUTION UNIT

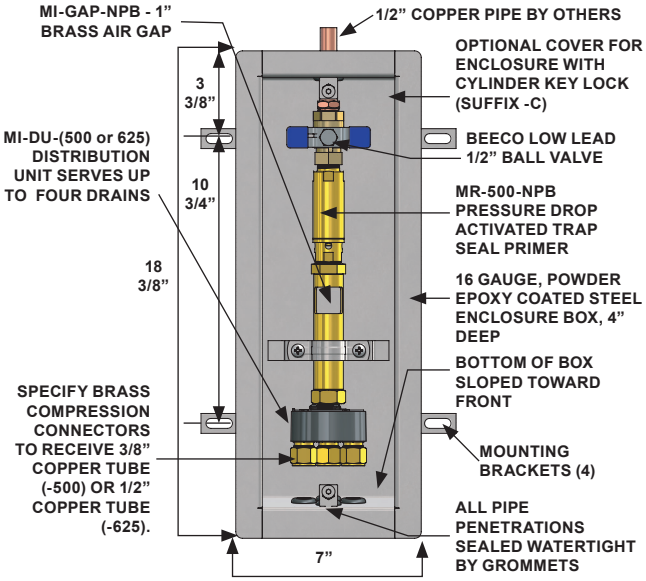

MR-ENC-AG			
MODEL NO.	DESCRIPTION	LIST PRICE	SHIPPING WT.
MR-ENC-AG-DU-500	Trap Primer in Box w/ AG and 3/8" Copper tube size (1/2" compression connections) on DU	$856.50	12 lbs.
MR-ENC-AG-DU-625	Trap Primer in Box w/ AG and 1/2" Copper tube size (5/8" compression connections) on DU	$856.50	12 lbs.

MR-ENC-DU — TRAP SEAL PRIMER IN A BOX WITH SHUT OFF VALVE, AND DISTRIBUTION UNIT

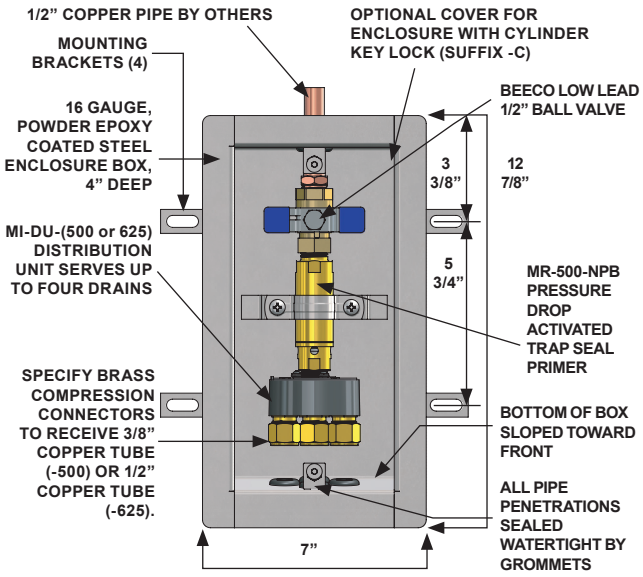

MR-ENC-DU			
MODEL NO.	DESCRIPTION	LIST PRICE	SHIPPING WT.
MR-ENC-DU-500	Trap Primer in Box w/ DU and 3/8" Copper tube size (1/2" compression connections)	$812.50	12 lbs.
MR-ENC-DU-625	Trap Primer in Box w/ DU and 1/2" Copper tube size (5/8" compression connections)	$812.50	12 lbs.

CALIFORNIA PROPOSITION 65 WARNING. This product contains chemicals known to the State of California to cause cancer and birth defects or other reproductive harm.

ACCESS DOORS

UA UNIVERSAL ACCESS DOOR

MDW DRYWALL BEAD ACCESS DOOR

CAD CEILING OR WALL ACCESS DOOR

CAD-DW CEILING OR WALL ACCESS DOOR WITH DRYWALL BEAD

CAD-PL CEILING OR WALL ACCESS DOOR PLASTER FINISH

CAD-FL CEILING OR WALL ACCESS DOOR, FLASH DOOR WITH FRAME

CAD-FL-PL CEILING OR WALL ACCESS DOOR, FLASH DOOR WITH FRAME AND PLASTER FINISH

CAD-FR CEILING OR WALL ACCESS DOOR FIRE RESISTANT

MPFR INSULATED FIRE RATED ACCESS DOOR

MFRU UNINSULATED FIRE RATED ACCESS DOOR

MPFR-DW INSULATED FIRE RATED ACCESS DOOR WITH DRYWALL BEAD

MI-SAD MEDIUM SECURITY ACCESS DOOR

MI-SADH HIGH SECURITY ACCESS DOOR

MI-FVP FLASH VALVE PANEL

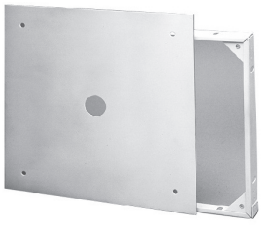

MI-SF SURFACE ACCESS DOOR

MI-VB RECESSED MOUNTED VALVE BOX

MI-VB-SM SURFACE MOUNTED VALVE BOX

PA PLASTIC ACCESS DOOR

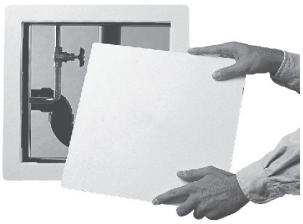

FHA, FHG FLOOR ACCESS DOOR

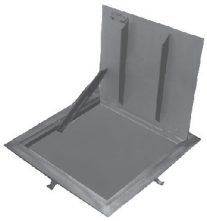

RHA, RHG ROOF HATCH

See current AD Access Door Price Book for List Prices and discount structure of the Access Doors. All sales subject to MIFAB's Terms and Warranties Please refer page 36.

CALIFORNIA PROPOSITION 65 WARNING. This product contains chemicals known to the State of California to cause cancer and birth defects or other reproductive harm.

MI-100 ENCLOSED ELECTRONIC TRAP SEAL PRIMER

MI-100-5 ILLUSTRATED

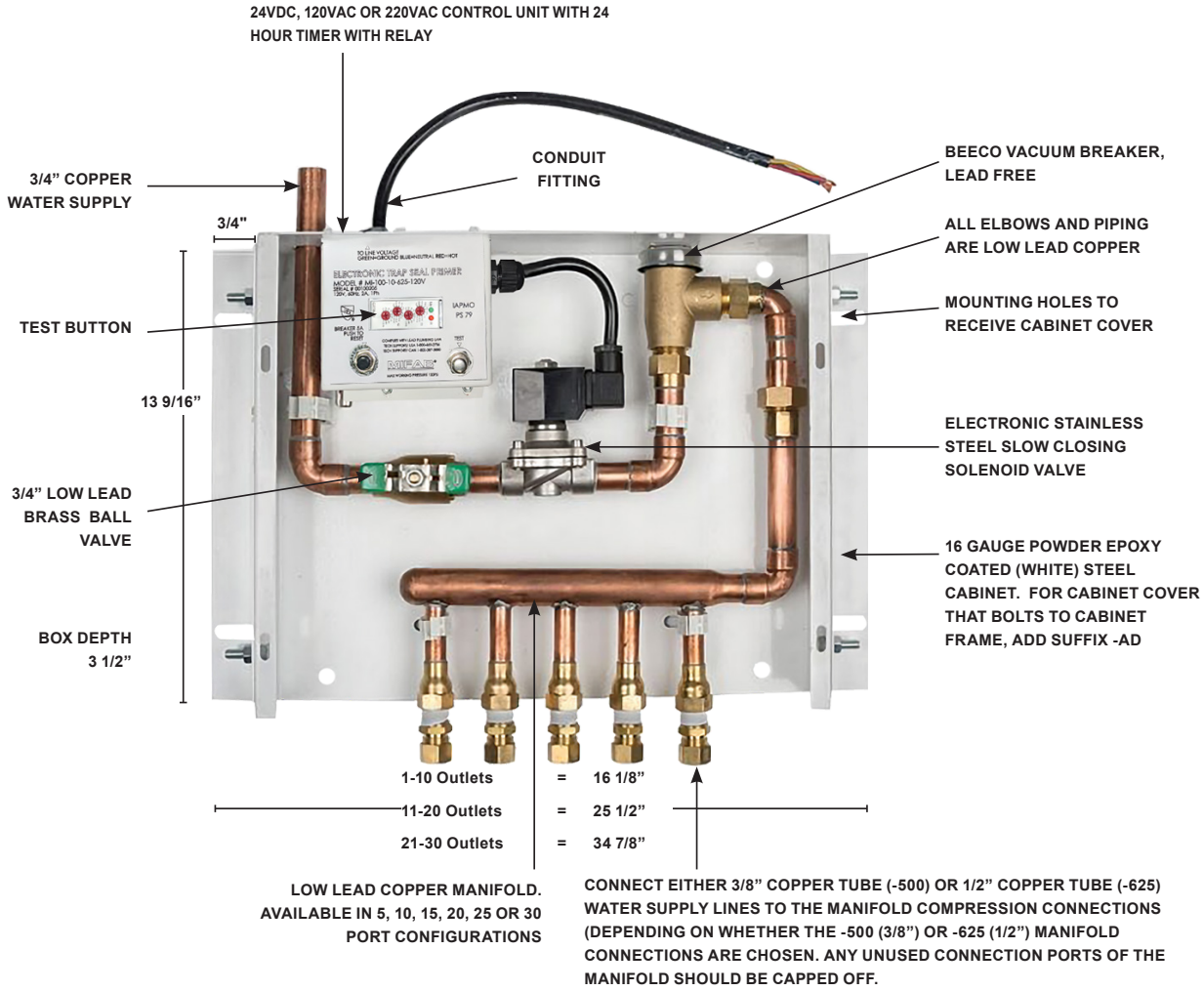

LEAD FREE
UPC
C ®

CSA B125.3 TESTED AND cUPC CERTIFIED

Note: All of MIFAB's electronic trap seal primers ordered with the 24VDC power option are equipped with a 120VAC plug adapter. The 120VAC plug adapter is designed to plug into a standard 120VAC three prong outlet. The plug adapter converts the voltage from 120VAC to 24VDC. The electronic trap seal primer internal components operate on the 24VDC supplied by the plug adapter. 24VAC direct connect electrical supply is also available, Specify Suffix -24VAC. No add.

CALIFORNIA PROPOSITION 65 WARNING. This product contains chemicals known to the State of California to cause cancer and birth defects or other reproductive harm.

The MI-100 is engineered for equal distribution of water to all ports. It's the perfect solution to keep sewer gas from entering the building from seldom used floor drains. The MI-100 can be located anywhere in the water supply and is engineered to permit the building owner to adjust the frequency and amount of water delivery through a timer and stainless steel solenoid valve. A manifold ensures that a minimum of 2 ounces of water are delivered to every port over a twenty-four hour period. The unit must be mounted 12" above the finished floor for every 20' of water supply line. The MI-100 can be installed with a cabinet cover. The system is capable of priming from 1 to 30 floor drain traps. The MI-100 is practical to serve many floor drain traps in infrequently used buildings such as convention centers and sports facilities. The MI-100 is made of lead free materials that touch water.

M-100			
MODEL NO.	**DESCRIPTION**	**LIST PRICE**	**SHIPPING WT.**
MI-100-5	1-5 opening ports with cabinet	**$2,127.00**	25 lbs.
MI-100-10	6-10 opening ports with cabinet	**$2,265.00**	26 lbs.
MI-100-15	11-15 opening ports with cabinet	**$2,312.50**	27 lbs.
MI-100-20	16-20 opening ports with cabinet	**$2,777.50**	28 lbs.
MI-100-25	21-25 opening ports with cabinet	**$2,977.00**	35 lbs.
MI-100-30	26-30 opening ports with cabinet	**$3,172.00**	36 lbs.

The MI-100 Series of electronic trap seal primers are tested and third party listed to the A.S.S.E. 1044 Standard.

See page 13 for a complete list of the MI-100 Optional Variations.

***Note:** Cabinet can be surface or flush mounted. The same cabinet can be installed either way.

Note: See pages 14 and 15 for installation, operation and maintenance instructions.

LEAD FREE
UPC
C ®

CSA B125.3 TESTED AND cUPC CERTIFIED

Note: See page 29 for IAPMO approval certificates.

"The newly designed MI-100 with all brass and metal manifold construction has been a big improvement on the overall quality and performance of this electric trap primer.It has been a great improvement for the commercial environments we install and design in."

– Gary Risse, Project Engineer, Intech Mechanical, Roseville, CA

CALIFORNIA PROPOSITION 65 WARNING. This product contains chemicals known to the State of California to cause cancer and birth defects or other reproductive harm.

MI-200 ELECTRONIC TRAP SEAL PRIMER WITH AIR GAP

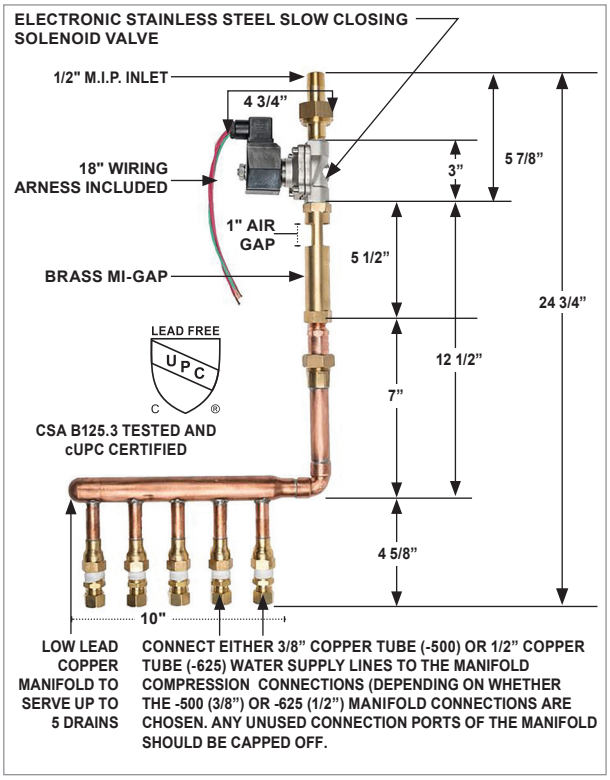

The MI-200 is engineered to connect to the voltage building energy management system used to manage the services in commercial, educational and institutional buildings. It can be located anywhere in the water supply. A manifold is provided as part of the assembly so that up to 5 drains can be served. The MI-200 is practical for infrequently used buildings such as convention centers and sports facilities. The MI-200 is manufactured in accordance with ANSI/ASME A112.1.2 air gap in plumbing systems Standard. UA1818 access door is suggested for access to the MI-200 when installed into the wall. NOTE: Timer not included.

MI-200			
MODEL NO.	DESCRIPTION	LIST PRICE	SHIPPING WT.
MI-200-500-24VDC	connections for 3/8" copper tube size, 24VDC	$575.50	4 lbs.
MI-200-625-24VDC	connections for 1/2" copper tube size, 24VDC	$575.50	4 lbs.
MI-200-500-120VAC	connections for 3/8" copper tube size, 120VAC	$575.50	4 lbs.
MI-200-625-120VAC	connections for 1/2" copper tube size, 120VAC	$575.50	4 lbs.
MI-200-500-220VAC	connections for 3/8" copper tube size, 220VAC	$575.50	4 lbs.
MI-200-625-220VAC	connections for 1/2" copper tube size, 220VAC	$575.50	4 lbs.

The MI-200 Series of electronic trap seal primers are tested and third party listed to the A.S.S.E. 1044 Standard.

Specify Suffix - LM for MI-200 without the copper manifold for single drain line use. (1/2" F.I.P. connection) and deduct **$110.00**

24VAC direct connect electrical supply is also available, Specify Suffix -24VAC. No Add.

See page 13 for Optional Variations

MI-300 ELECTRONIC TRAP SEAL PRIMER WITH AIR GAP, COPPER MANIFOLD AND CONTROL PANEL

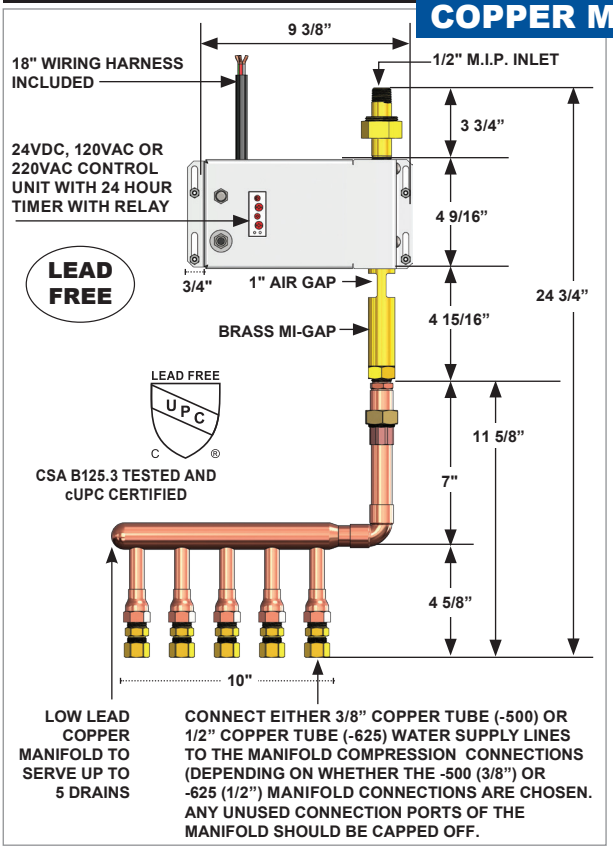

The MI-300 is manufactured with a stainless steel solenoid valve, air gap, copper manifold and electronic controller. The water discharge frequency can be adjusted to meet the building's needs. The MI-300 can be located anywhere in the water supply. A manifold is connected to the bottom of the MI-300 to serve up to 5 drains. The MI-300 is practical for infrequently used buildings such as convention centers and sports facilities. The MI-300 is manufactured in accordance with ANSI/ASME A112.1.2 air gap in plumbing systems Standard. UA 18x18 access door is suggested for access to the MI-300 when installed in the wall.

MI-300			
MODEL NO.	DESCRIPTION	LIST PRICE	SHIPPING WT.
MI-300-500-24VDC	connections for 3/8" copper tube size, 24VDC	$1,199.00	8 lbs.
MI-300-625-24VDC	connections for 1/2" copper tube size, 24VDC	$1,199.00	8 lbs.
MI-300-500-120VAC	connections for 3/8" copper tube size, 120VAC	$1,199.00	8 lbs.
MI-300-625-120VAC	connections for 1/2" copper tube size, 120VAC	$1,199.00	8 lbs.
MI-300-500-220VAC	connections for 3/8" copper tube size, 220VAC	$1,199.00	8 lbs.
MI-300-625-220VAC	connections for 1/2" copper tube size, 220VAC	$1,199.00	8 lbs.

The MI-300 Series of electronic trap seal primers are tested and third party listed to the A.S.S.E. 1044 Standard.

Specify Suffix - LM for MI-300 without the copper manifold for single drain line use. (1/2" F.I.P. connection) and deduct **$110.00**

24VAC direct connect electrical supply is also available, Specify Suffix -24VAC. No Add.

See page 13 for Optional Variations

CALIFORNIA PROPOSITION 65 WARNING. This product contains chemicals known to the State of California to cause cancer and birth defects or other reproductive harm.

ELECTRONIC TRAP SEAL PRIMER WITH AIR GAP, COPPER MANIFOLD & CONTROL PANEL POWERED BY A BATTERY PACK — MI-300-BP

The MI-300-BP is manufactured with a stainless steel solenoid valve, air gap, copper manifold and battery pack controller that will last approximately one year. The water discharge frequency can be adjusted to meet the building's needs. The MI-300-BP can be located anywhere in the water supply. A manifold is connected to the bottom of the MI-300-BP to serve up to 5 drains. The MI-300-BP is practical for infrequently used buildings such as those that do not have access to power. The MI-300-BP is manufactured in accordance with ANSI/ASME A112.1.2 air gap in plumbing systems Standard. UA 18x18 access door is suggested for access to the MI-300-BP when installed in the wall.

MI-300-BP			
MODEL NO.	DESCRIPTION	LIST PRICE	SHIPPING WT.
MI-300-BP-500	connections for 3/8" copper tube size	$1,647.00	8 lbs.
MI-300-BP-625	connections for 1/2" copper tube size	$1,647.00	8 lbs.

Specify Suffix - LM for MI-300-BP without the copper manifold for single drain line use. (1/2" F.I.P. connection) and deduct **$110.00**

LEAD FREE

The MI-300 Series of electronic trap seal primers are tested and third party listed to the A.S.S.E. 1044 Standard.

LEAD FREE UPC C ®
CSA B125.3 TESTED AND cUPC CERTIFIED

See page 13 for a complete list of the MI-300-BP Optional Variations. (such as box enclosures)
Note: Estimated life of the supplied battery pack is six months.

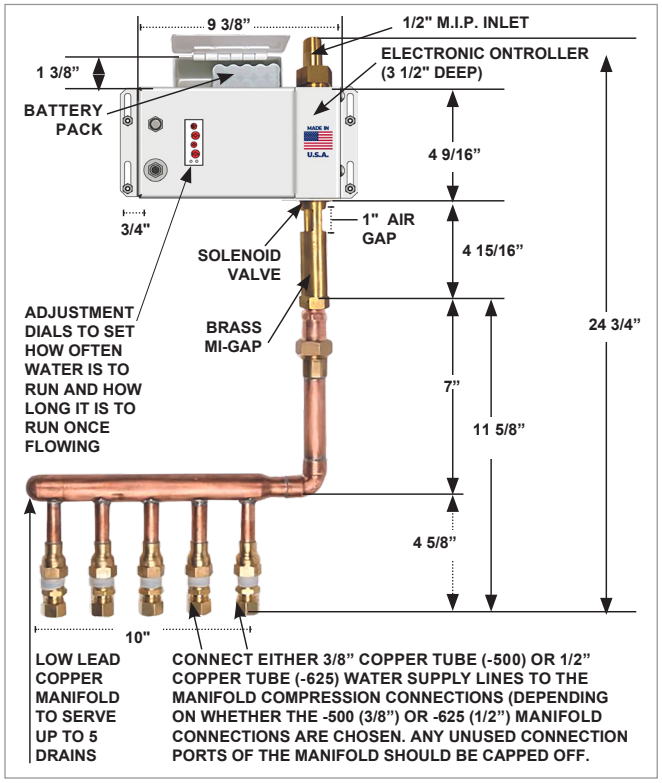

ELECTRONIC TRAP SEAL PRIMER WITH AIR GAP, COPPER MANIFOLD, CONTROL PANEL IN ENCLOSURE — MI-300-ENC

The MI-300-ENC is manufactured with a stainless steel solenoid valve, air gap, copper manifold and electronic controller. The water discharge frequency can be adjusted to meet the building's needs. The MI-300-ENC can be located anywhere in the water supply. A manifold is connected to the bottom of the MI-300-ENC to serve up to 5 drains. The MI-300-ENC is practical for infrequently used buildings such as convention centers and sports facilities. The MI-300-ENC is manufactured in accordance with ANSI/ASME A112.1.2 air gap in plumbing systems Standard. UA 18x18 access door is suggested for access to the MI-300-ENC when installed in the wall.

MI-300-ENC			
MODEL NO.	DESCRIPTION	LIST PRICE	SHIPPING WT.
MI-300-500-ENC-24VDC	connections for 3/8" copper tube size, 24VDC	$1,574.00	8 lbs.
MI-300-625-ENC-24VDC	connections for 1/2" copper tube size, 24VDC	$1,574.00	8 lbs.
MI-300-500-ENC-120VAC	connections for 3/8" copper tube size, 120VAC	$1,574.00	8 lbs.
MI-300-625-ENC-120VAC	connections for 1/2" copper tube size, 120VAC	$1,574.00	8 lbs.
MI-300-500-ENC-220VAC	connections for 3/8" copper tube size, 220VAC	$1,574.00	8 lbs.
MI-300-625-ENC-220VAC	connections for 1/2" copper tube size, 220VAC	$1,574.00	8 lbs.

Specify Suffix - LM for MI-300-ENC without the copper manifold for single drain line use. (1/2" F.I.P. connection) and deduct **$110.00**

24VAC direct connect electrical supply is also available, Specify Suffix -24VAC.

See page 13 for Optional Variations

The MI-300 Series of electronic trap seal primers are tested and third party listed to the A.S.S.E. 1044 Standard.

"MIFAB trap electronic trap primers are simple to install, easy to get & my go to for every job" – Laine West, Owner, WWF Contractors, Sacramento, CA

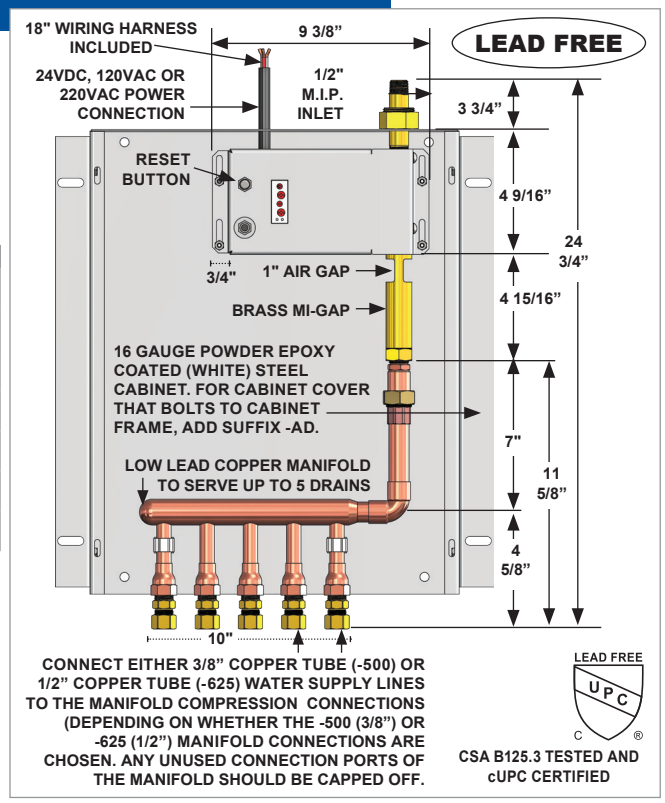

CALIFORNIA PROPOSITION 65 WARNING. This product contains chemicals known to the State of California to cause cancer and birth defects or other reproductive harm.

MI-300-DU

ELECTRONIC TRAP SEAL PRIMER WITH AIR GAP, DISTRIBUTION UNIT AND CONTROL PANEL

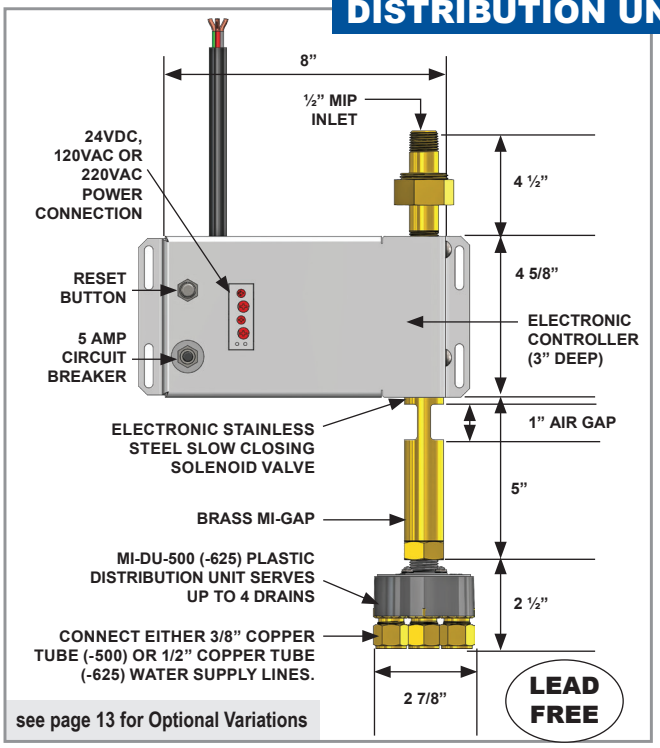

see page 13 for Optional Variations

The MI-300-DU is manufactured with a copper air gap, stainless steel body ½" solenoid valve, and 1-4 ports distribution unit (specify 3/8" copper tube (-500) or 1/2" copper tube (-625) compression connections by indicating suffix -500 (3/8") or -625 (1/2"). Electronic components to include single point power connection at 120VAC, 220VAC or 24VDC, manual override switch, 5 amp breaker, 24 hour timer with relay and adjustable delay. 100 p.s.i. operating pressure.

The MI-300-DU is manufactured in accordance to the ANSI/ASME A112.1.2 air gap in plumbing systems Standard.

MI-300-DU			
MODEL NO.	DESCRIPTION	LIST PRICE	SHIPPING WT.
MI-300-DU-500-24VDC	connections for 3/8" copper tube size, 24VDC	$1,169.00	7 lbs.
MI-300-DU-625-24VDC	connections for 1/2" piping, 24VDC	$1,169.00	7 lbs.
MI-300-DU-500-120VAC	connections for 3/8" copper tube size, 120VAC	$1,169.00	7 lbs.
MI-300-DU-625-120VAC	connections for 1/2" copper tube size, 120VAC	$1,169.00	7 lbs.
MI-300-DU-500-220VAC	connections for 3/8" copper tube size, 220VAC	$1,169.00	7 lbs.
MI-300-DU-625-220VAC	connections for 1/2" copper tube size, 220VAC	$1,169.00	7 lbs.

24VAC direct connect electrical supply is also available, Specify Suffix -24VAC.

MI-300-WHA

ELECTRONIC TRAP SEAL PRIMER WITH AIR GAP AND WATER HAMMER ARRESTOR

The MI-300-WHA is practical for infrequently used buildings such as convention centers and sports facilities to prevent the escape of sewer gas. The water hammer arrestor that is included with the product is ideal to prevent quick closing valves from causing damage to the connections. It is engineered to connect to the low-voltage building energy management system used to control the services in commercial, educational and institutional buildings. The water discharge is factory pre-set to deliver 2 ounces of water daily and can be adjusted to meet the building's needs. It can be located anywhere in the water supply. The -ENC 12" X 12" enclosure is suggested when the MI-300-WHA is installed into the wall. Recommended operating line pressure is 20 psi to 80 psi. Maximum operating line pressure is 100 psi.

The MI-300-WHA Series of electronic trap seal primers are tested and third party listed to the A.S.S.E. 1044 Standard.

MI-350-DU			
MODEL NO.	DESCRIPTION	LIST PRICE	SHIPPING WT.
MI-300-WHA-500-24VDC	connections for 3/8" copper tube, 24VDC	$1,169.00	8 lbs.
MI-300-WHA-625-24VDC	connections for 1/2" copper tube, 24VDC	$1,169.00	8 lbs.
MI-300-WHA-500-120VAC	connections for 3/8" copper tube, 120VAC	$1,169.00	8 lbs.
MI-300-WHA-625-120VAC	connections for 1/2" copper tube, 120VAC	$1,169.00	8 lbs.
MI-300-WHA-500-220VAC	connections for 3/8" copper tube, 220VAC	$1,169.00	8 lbs.
MI-300-WHA-625-220VAC	connections for 1/2" copper tube, 220VAC	$1,169.00	8 lbs.

24VAC direct connect electrical supply is also available, Specify Suffix -24VAC.

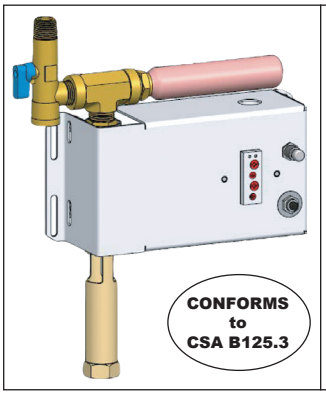

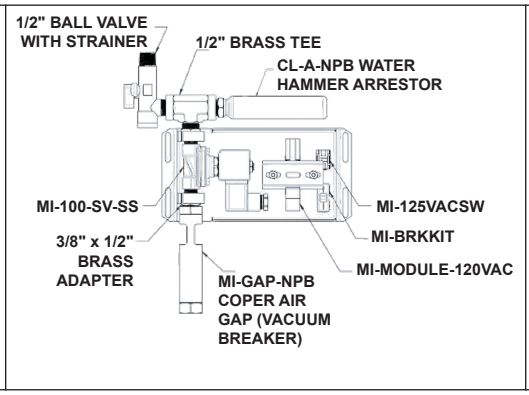

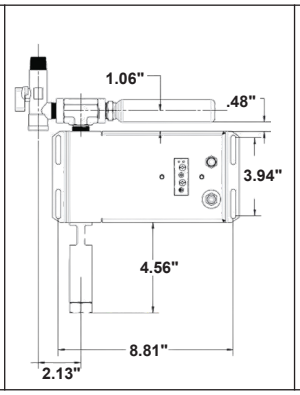

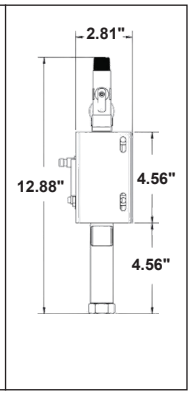

CALIFORNIA PROPOSITION 65 WARNING. This product contains chemicals known to the State of California to cause cancer and birth defects or other reproductive harm.

MI-350-DU

ELECTRONIC TRAP SEAL PRIMER WITH AIR GAP, DISTRIBUTION UNIT AND CONTROL PANEL IN ENCLOSURE

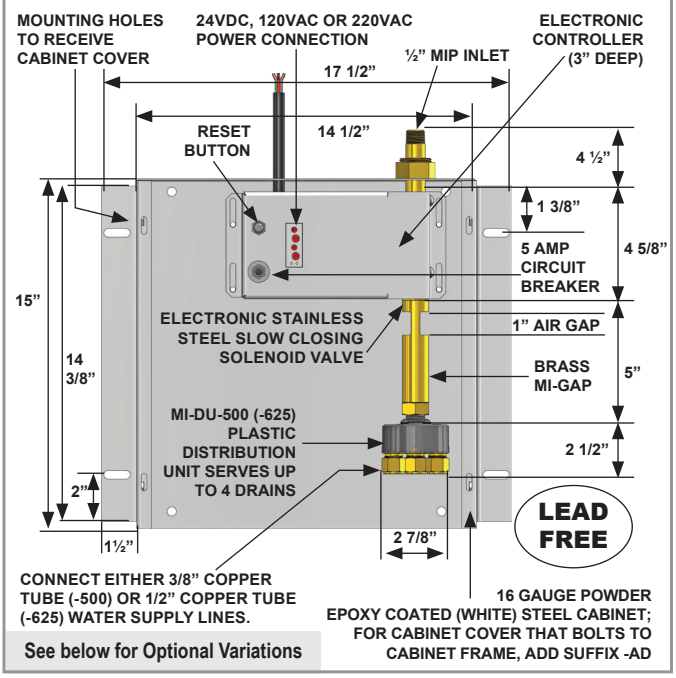

See below for Optional Variations

The MI-350-DU is manufactured with a copper air gap, stainless steel body ½" solenoid valve, and 1-4 ports distribution unit (specify 3/8" copper tube (-500) or 1/2" copper tube (-625) compression connections by indicating suffix -500 (3/8") or -625 (1/2"). In enclosure electronic components to include single point power connection at 120VAC, 220VAC or 24VDC, manual override switch, 5 amp breaker, 24 hour timer with relay and adjustable delay. 100 p.s.i. operating pressure. A powder epoxy coated steel enclosure box is included.

The MI-350-DU is manufactured in accordance to the ANSI/ASME A112.1.2 air gap in plumbing systems Standard.

MI-350-DU			
MODEL NO.	DESCRIPTION	LIST PRICE	SHIPPING WT.
MI-350-DU-500-24VDC	connections for 3/8" copper tube size, 24VDC	$1,540.50	17 lbs.
MI-350-DU-625-24VDC	connections for 1/2" copper tube size, 24VDC	$1,540.50	17 lbs.
MI-350-DU-500-120VAC	connections for 3/8" copper tube size, 120VAC	$1,540.50	17 lbs.
MI-350-DU-625-120VAC	connections for 1/2" copper tube size, 120VAC	$1,540.50	17 lbs.
MI-350-DU-500-220VAC	connections for 3/8" copper tube size, 220VAC	$1,540.50	17 lbs.
MI-350-DU-625-220VAC	connections for 1/2" copper tube size, 220VAC	$1,540.50	17 lbs.

24VAC direct connect electrical supply is also available, Specify Suffix -24VAC.

MI-100, MI-200, MI-300, MI-350 OPTIONAL VARIATIONS					
SUFFIX	DESCRIPTION	MI-100 LIST PRICE	MI-200 LIST PRICE	MI-300, MI-300-DU LIST PRICE	MI-300-BP LIST PRICE
-3P	120VAC 3 Prong plug	$222.25	$222.25	$222.25	N/A
-A	Allen key lock for access door (door is separate)	$31.00	$31.00	$31.00	$31.00
-AD	Cabinet Cover (bolted to cabinet frame and non hinged) (16 gauge powder epoxy coated steel (white)	1-10 Outlets - $227.00 11-20 Outlets - $302.25 21-30 Outlets - $385.50	$215.50	$231.50	$231.50
-ADSS	Stainless Steel (Type 304) Cabinet Cover (bolted to cabinet frame and non hinged) (16 gauge fabricated stainless steel (Type 304)	1-10 Outlets - $385.50 11-20 Outlets - $460.75 21-30 Outlets - $538.25	$369.50	$369.50	$369.50
-BA	Buy American Act compliant product	P.O.A.	P.O.A.	P.O.A.	P.O.A.
-BP	Battery Pack	N/A	No Add	No Add	Included
-C	Cylinder key lock for access door (door is separate)	$39.50	$39.50	$39.50	$39.50
-DW	Drywall bead frame for access door (5" cabinet depth) (door is separate)	P.O.A.	P.O.A.	P.O.A.	P.O.A.
-ENC	Steel Cabinet to enclose MI-200 / MI-300 (16 gauge powder epoxy coated steel (white) cabinet	N/A	$300.00	$374.00	$374.00
-ENCSS	Stainless Steel (Type 304) Cabinet to enclose MI-200 / MI-300 (16 gauge fabricated stainless steel (Type 304)	N/A	$529.00	$603.00	$603.00
-MFRU	Uninsulated fire rated access door, flush mount (6" minimum overall depth) (door is separate)	(See Access Door Price Book for List Prices)			
-PL	Paddle latch for access door (door is separate)	$98.50	$98.50	$375.00	$375.00
-SS	Stainless Steel (Type 304) Cabinet (16 gauge fabricated stainless steel (Type 304) (MI-100)	1-10 Outlets - $768.75 11-20 Outlets - $876.25 21-30 Outlets - $1,037.25	N/A	N/A	N/A
-UA	Access door, prime coated (5" minimum overall depth)	(See Access Door Price Book for List Prices)			
-UASS	Access door, stainless steel (5" minimum overall depth)	(See Access Door Price Book for List Prices)			
-24VAC	24VAC	No Add	No Add	No Add	No Add
-24VDC	24VDC	No Add	No Add	No Add	No Add
-75WS	3/4" water supply connection	Standard	$117.25	$117.25	$117.25
-120VAC	120VAC	No Add	No Add	No Add	No Add
-220VAC	220VAC	No Add	No Add	No Add	No Add
-500	(3/8" copper tube compression ports)	No Add	No Add	No Add	No Add
-625	(1/2" copper tube compression ports)	No Add	No Add	No Add	No Add

The MI-100 Series of electronic trap seal primers are tested and third party listed to the A.S.S.E. 1044 Standard.

LEAD FREE
UPC
C ®

CSA B125.3 TESTED & cUPC CERTIFIED

MI-100-10 illustrated

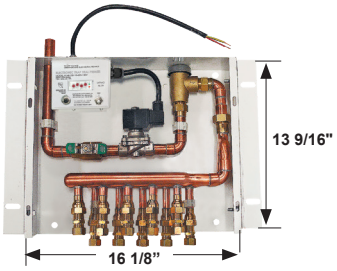

MI-100-20 illustrated

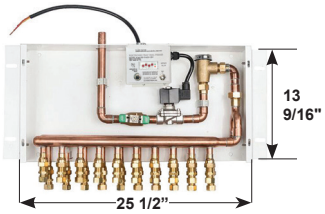

MI-100-30 illustrated

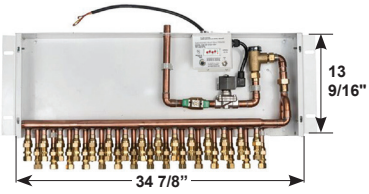

"The MIFAB MR-500-NPB is readily available and we stock this highly durable product for construction. I know most people just want pricing and availability but only needing a 3PSI pressure drop to activate is a win for everyone, Including the owner of the project."

– John Rutledge, Manager, Commercial Plumbing Division, Cregger Supply, Columbia, SC

CALIFORNIA PROPOSITION 65 WARNING. This product contains chemicals known to the State of California to cause cancer and birth defects or other reproductive harm.

MI-100 Electronic Trap Seal Primer Installation Instructions

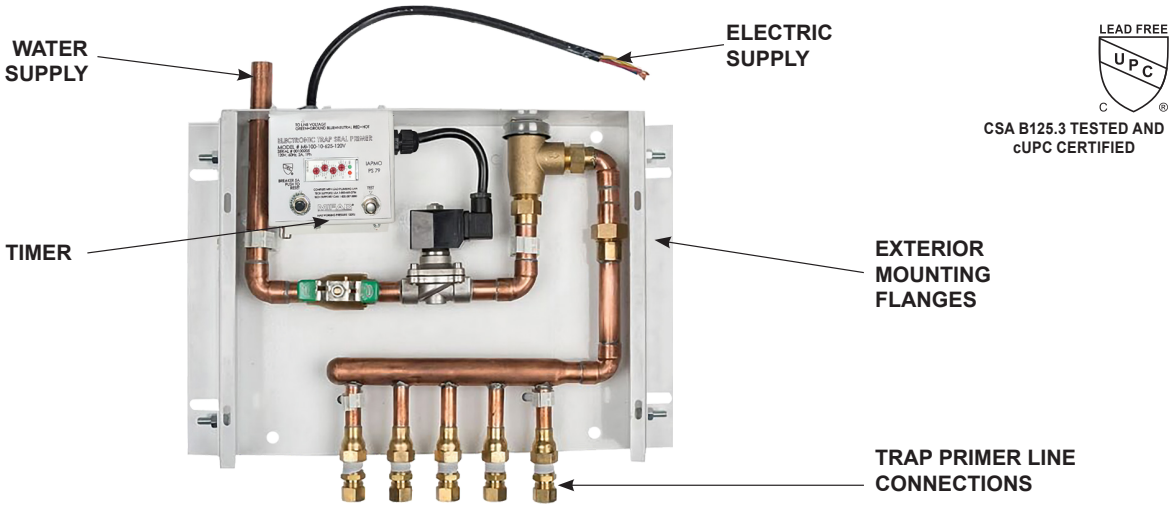

LEAD FREE
UPC
CSA B125.3 TESTED AND cUPC CERTIFIED

DESCRIPTION: The MI-100 is a pre-assembled electronic trap seal primer programmed to maintain the water seal of up to 30 floor drain traps. It is factory programmed to operate at pre-set flush time intervals and can be modified relative to the site condition or custom requirements. The MI-100 is manufactured with a BEECO vacuum breaker, is easy to install and is maintenance free. Typical installations are schools, hospitals, laboratories, stadiums, bathrooms, manufacturing facilities and food processing facilities. The MI-100 meets LEED credit 3.2 and 5.2 for water reduction and regional material usage.

APPROVALS: The MI-100 Series is tested and third party certified to the ASSE 1044 electronic trap seal primer Standard and listed with I.A.P.M.O. MIFAB® can manufacture it with either 24VDC, 120VAC or 220VAC electrical connections.

Note: All of MIFAB's electronic trap seal primers ordered with the 24VDC power option are equipped with a 120VAC plug adapter. The 120VAC plug adapter is designed to plug into a standard 120VAC three prong outlet. The plug adapter converts the voltage from 120VAC to 24VDC. The electronic trap seal primer internal components operate on the 24VDC supplied by the plug adapter.

INSTALLATION GUIDELINES:

1) Properly mount the MI-100 to the wall with # 14 wood or metal screws. It must be level and square. The MI-100 should be secured between wall studs or on the finished wall as close as possible to the drains being serviced.

2) The MI-100 is supplied with exterior mounting flanges for flush to the wall installations. For surface mount installations, remove the exterior mounting flanges and use the holes in the back of the cabinet to secure it to the wall.

3) The MI-100 must be installed a minimum of 12" above the highest drain being served. Note that the MI-100 should not be considered a pressure feed trap priming system. The manifold within the MI-100 must always be installed so that it is higher than the floor drain traps that it serves. The supply lines from the manifold to the floor drain traps should always be sloped to ensure proper water flow from the manifold to the floor drain traps. The MI-100 can be installed up to 100 feet away from the drains they serve as long as the MI-100 is installed high enough so that there is enough slope from the MI-100 to the drains to ensure water flow.

4) Properly connect the electric and water supply lines by following local codes and guidelines. The water supply should be connected to the 3/4" copper tube located on the top of the MI-100. Connect the trap primer supply lines to the manifold in the MI-100. The black wire is "hot", the white wire is "neutral" and the green wire is "ground". Note that the MI-100-24VDC model is always supplied with a 24 volt converter plug that plugs directly into a 120 volt wall outlet.

5) Connect either 3/8" copper tube (-500) or 1/2" copper tube (-625) water supply lines to the manifold connections (depending on whether the -500 (3/8") or -625 (1/2") manifold connections are chosen. Any unused connection ports of the manifold should be capped off. To do this, remove the entire compression connection from the underside of the manifold and then thread a ½" M.I.P. plug into the female threaded opening in the manifold.

6) Ensure that the water supply (with a minimum of 20 psig) is connected and then turn on power to the device. Ensure that the ball valve is open. The MI-100 will then cycle for a half second. Press the Test Button to repeatedly prime the unit. The Test Button may need to be pressed multiple times in order to have water reach all of the drains. Observe for any leaks within the MI-100 piping system. Ensure that all lines are free of debris.

CALIFORNIA PROPOSITION 65 WARNING. This product contains chemicals known to the State of California to cause cancer and birth defects or other reproductive harm.

TIMER ADJUSTMENT:

The pre-set timer operates a normally closed stainless steel slow closing solenoid valve. The timer consists of four adjustments dials. The “T1” time – this is the amount of time in between flow cycles and is adjustable from 0.1 second - 100 days (10 selections). The “T2” time – this is the amount of time that the unit is flowing water to the traps and is adjustable from 0.1 second - 100 days (10 selections). The MI-100 models are factory set to turn the stainless steel solenoid valve “ON” every eight hours for 8 seconds. MIFAB® estimates that when the line pressure is 40 p.s.i., 12 ounces of water will flow from the MI-100 manifold system for every half second that the stainless steel solenoid valve is on. Note that cold climate installations (meat lockers and cold storage areas) have an increased rate of evaporation than temperate areas and will therefore need more water flow to the floor drain traps to ensure that there is a constant water seal in the floor drain traps.

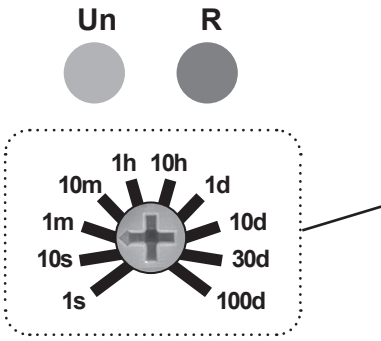

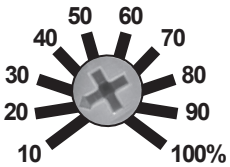

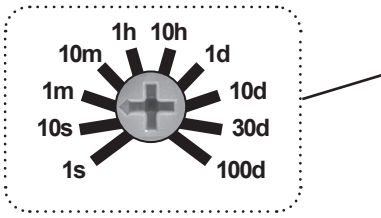

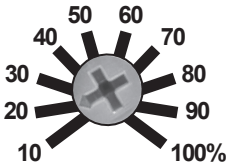

T1: HOW LONG THE UNIT STAYS ON

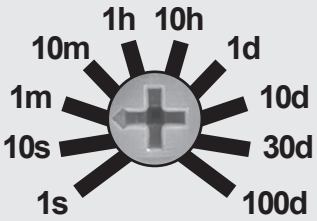

0.1 SECOND ~ 100 DAYS ADJUSTABLE

T2: HOW OFTEN THE UNIT TURNS ON

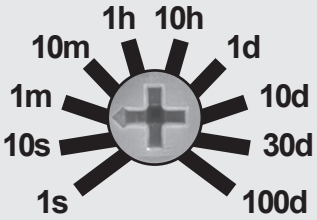

0.1 SECOND ~ 100 DAYS ADJUSTABLE

Percentage is under t1/t2 dial and works as a percentage of the set time. For example, If you want the unit to turn on every 24 hours for 5 seconds, the timer should be set to:

T1 SET TO 10S
T1 PERCENTAGE SET TO 80%
10S x 80% = 8 SEC

T2 SET TO 10H
T2 PERCENTAGE SET TO 80%
10H x 80% = 8 HRS

“Since switching to MIFAB® trap seal primers, we have found that our customers prefer them over others for simple adjustment, and ease of installation. It is an easy win for us and our customers!”

– Jon Perkins Sr, Manager, Sonoran Plumbing Supply, AZ

CALIFORNIA PROPOSITION 65 WARNING. This product contains chemicals known to the State of California to cause cancer and birth defects or other reproductive harm.

MI-100-MFRU

ELECTRONIC TRAP SEAL PRIMER - WITH FIRE RATED ACCESS DOOR

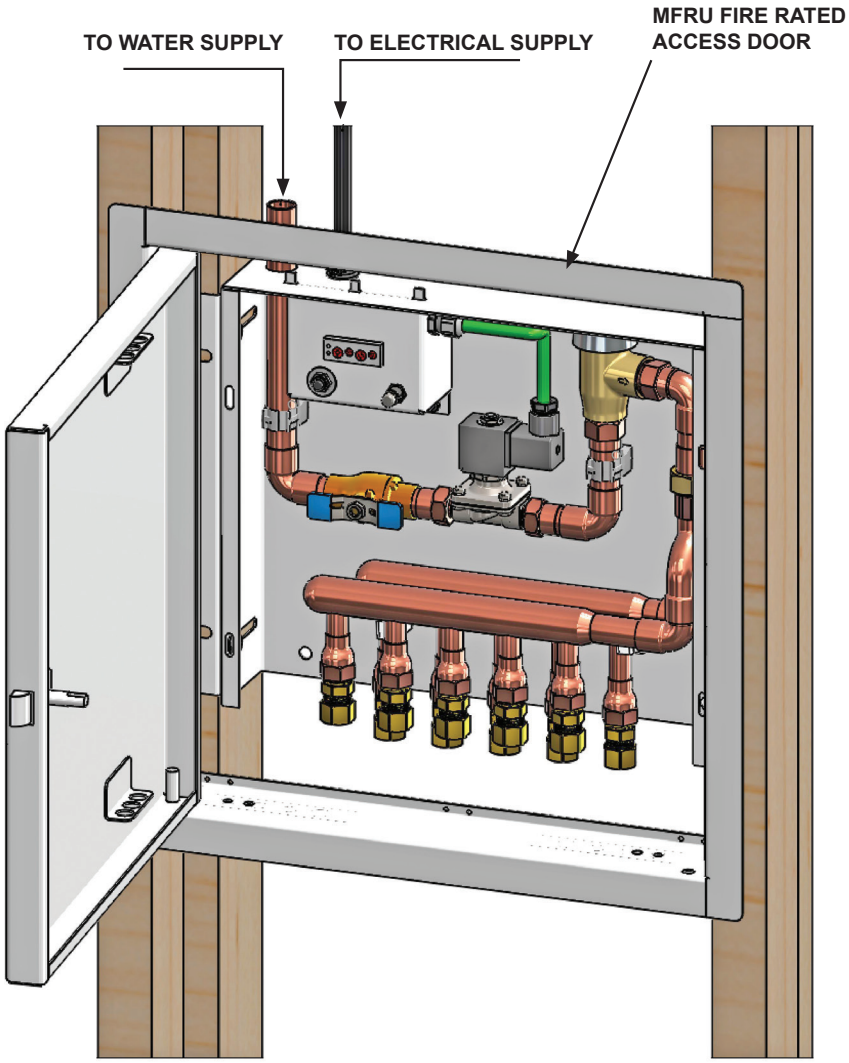

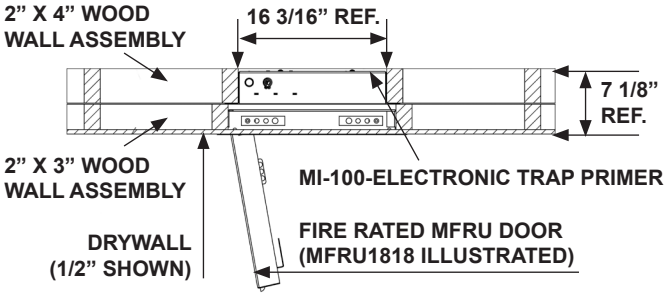

MI-100 ELEC. TRAP PRIMER	MFRU DOOR TO USE
MI-100-5 & MI-100-10	MFRU1818
MI-100-15 & MI-100-20	MFRU3030
MI-100-25 & MI-100-30	MFRU3636

Many construction projects require fire rated walls to maintain the fire rating of the wall system within the building. Penetrations within these walls must maintain the fire rating. MIFAB offers the -MFRU optional variation which is a fire rated access door installed with the MI-100 electronic trap seal primer assembly to maintain the wall fire rating.

CALIFORNIA PROPOSITION 65 WARNING. This product contains chemicals known to the State of California to cause cancer and birth defects or other reproductive harm.

DE - DIELECTRIC NIPPLES

THREADED BY THREADED		
MODEL NO.	DESCRIPTION	CARTON QUANTITY
MI-DETT-50	1/2" x 3" long, threaded by threaded	25
MI-DETT-75	3/4" x 3" long, threaded by threaded	25
MI-DETT-100	1" x 4" long, threaded by threaded	25
MI-DETT-125	1 1/4" x 4" long, threaded by threaded	10
MI-DETT-150	1 1/2" x 4" long threaded by threaded	10
MI-DETT-200	2" x 4" long, threaded by threaded	10
MI-DETT-250	2 1/2" x 6" long, threaded by threaded	6
MI-DETT-300	3" x 6" long, threaded by threaded	6
MI-DETT-350	3 1/2" x 6" long, threaded by threaded	6
MI-DETT-400	4" x 6" long, threaded by threaded	6

GROOVED BY THREADED		
MODEL NO.	DESCRIPTION	CARTON QUANTITY
MI-DEGT-50	1/2" x 3" long, grooved by threaded	25
MI-DEGT-75	3/4" x 3" long, grooved by threaded	25
MI-DEGT-100	1" x 4" long, grooved by threaded	25
MI-DEGT-125	1 1/4" x 4" long, grooved by threaded	10
MI-DEGT-150	1 1/2" x 4" long grooved by threaded	10
MI-DEGT-200	2" x 4" long, grooved by threaded	10
MI-DEGT-250	2 1/2" x 6" long, grooved by threaded	6
MI-DEGT-300	3" x 6" long, grooved by threaded	6
MI-DEGT-350	3 1/2" x 6" long, grooved by threaded	6
MI-DEGT-400	4" x 6" long, grooved by threaded	6

GROOVED BY GROOVED		
MODEL NO.	DESCRIPTION	CARTON QUANTITY
MI-DEGG-200	2" x 4" long, grooved by grooved	10
MI-DEGG-250	2 1/2" x 6" long, grooved by grooved	6
MI-DEGG-300	3" x 6" long, grooved by grooved	6
MI-DEGG-400	4" x 6" long, grooved by grooved	6

ANSI American National Standards Institute

FOR DIELECTRIC NIPPLE LIST PRICES, SEE THE CURRENT CLPB COUNTERLINE LIST PRICE BOOK

MI-DETT Series

MI-DEGT Series

MI-DEGG Series

BRASS TRAP SEAL PRIMER AIR GAP FITTING — MI-GAP-NPB

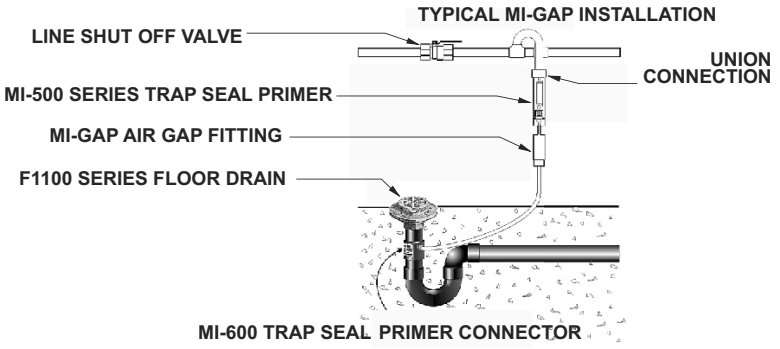

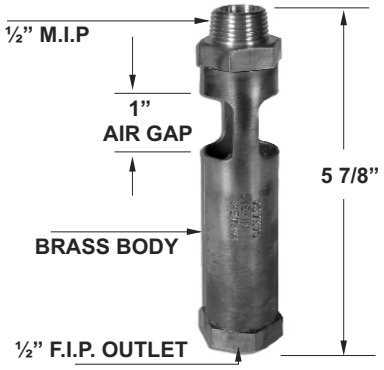

MIFAB's MI-GAP-NPB air gap fitting can be used with MIFAB's MR-500-NPB, M1-500-NPB, M2-500-NPB, M3-500-NPB, MI-TSP-1-NPB, MI-TSP-2-NPB, MI-TSP-3-NPB trap seal primers and MIFAB's MI-DU Series distribution units. The MI-GAP-NPB performs the dual functions of backflow preventer and vacuum breaker. Note: A vertical air gap of twice the connection size is required by code.

MI-GAP-NPB					
MODEL NO.	DESCRIPTION	LIST PRICE	SHIP WEIGHT (Lbs)	CARTON QTY.	CARTON WEIGHT (Lbs)
MI-GAP-NPB	Brass Air Gap Fitting for Trap Seal Primer Valves	$70.75	1.5	10	15

"The MIFAB MR-500-NPB trap seal primers are very good quality and competitively priced.The call back ratio is slim to almost none. Out of a thousand I have used; I have only had 2 returned, and I am not so sure that it was the primer - more likely the water quality. They are very flexible with the number of traps that can be served by one primer – keeping inventory to a minimum!"

– Anthony McGee, President, McGee Plumbing Co Inc., Salt Lake City, UT

CALIFORNIA PROPOSITION 65 WARNING. This product contains chemicals known to the State of California to cause cancer and birth defects or other reproductive harm.

MI-700 GRAVITY FED TRAP SEAL PRIMERS

MIFAB's MI-700 Series trap seal primers are engineered to prime one floor drain trap that is no further than twenty feet from the fixture. A 1/2" (13) O.D. copper make-up water line connecting the trap seal primer to the floor drain trap is recommended for the M-700 & MI-701.

List price is **$66.25** for the -BH option.

Note: S.S. braided supply pipe w/escutcheon is available for the MI-702 (option -BH).

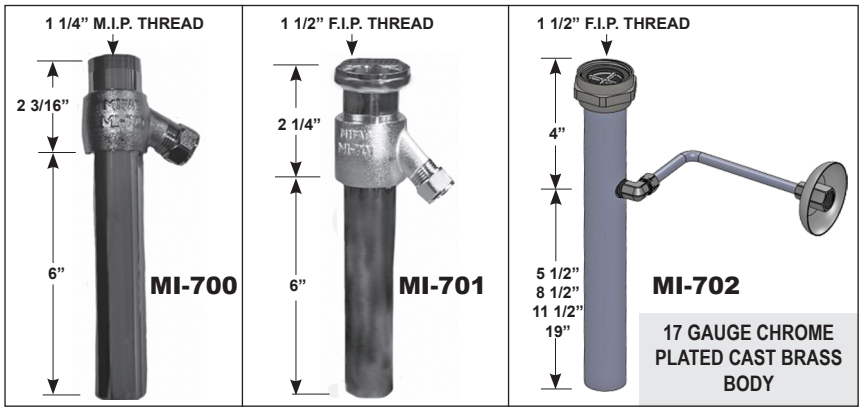

MI-700					
MODEL NO.	DESCRIPTION	LIST PRICE	SHIP WEIGHT (Lbs.)	CARTON QTY.	CARTON WEIGHT (Lbs.)
MI-700	1 1/4" Lavatory Trap Seal Primer	$103.25	0.75	20	15.00
MI-701	1 1/2" Valve Trap Seal Primer	$126.25	1.25	20	25.00
MI-702-9.5	1 1/2" Valve Trap Seal Primer w/ VB, 9 1/2" Long	$197.00	1.25	20	25.00
MI-702-12.5	1 1/2" Valve Trap Seal Primer w/ VB, 12 1/2" Long	$212.00	1.50	20	30.00
MI-702-15.5	1 1/2" Valve Trap Seal Primer w/ VB, 15 1/2" Long	$216.50	1.75	20	35.00
MI-702-23	1 1/2" Valve Trap Seal Primer w/ VB, 23 1/2" Long	$201.50	2.25	20	45.00

WCTSP WATER CLOSET TRAP SEAL PRIMER

The MIFAB® Model # WCTSP-1 is designed to provide two ounces of a water prime every time the toilet is flushed. It is an easy retro-fit to existing toilets and uses existing water that is wasted when the toilet is flushed to prime floor drain traps within twenty feet of the toilet. A continuously sloped 5/8" OD copper make-up water line should be installed between the WCTSP-1 and the floor drain trap.

WCTSP			
MODEL NO.	DESCRIPTION	LIST PRICE	SHIP WEIGHT (Lbs.)
WCTSP-1	Water Closet Trap Seal Primer	$138.00	3

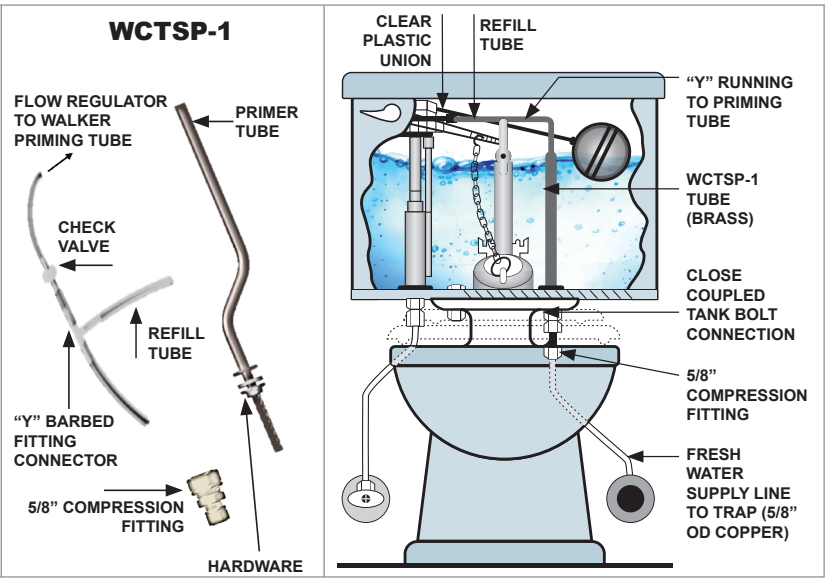

MI-750 TAILPIECE TRAP SEAL PRIMER WITH BRAIDED CONNECTING HOSE

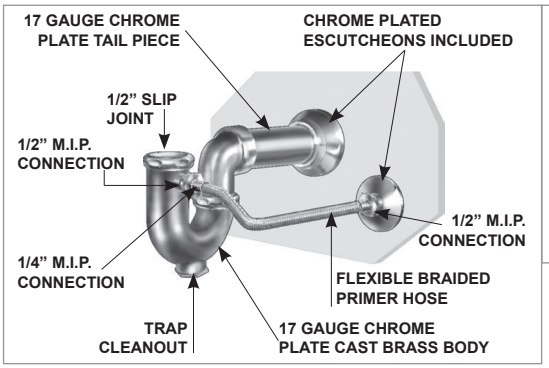

Note: Both 1 1/2" and 1 1/4" slip joint nuts are provided.

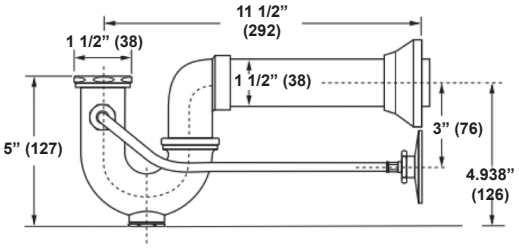

MI-750		
MODEL NO.	DESCRIPTION	LIST PRICE
MI-750	Tailpiece Trap Seal Primer	SEE MPB PRICE BOOK

CALIFORNIA PROPOSITION 65 WARNING. This product contains chemicals known to the State of California to cause cancer and birth defects or other reproductive harm.

MIFAB®, Inc., 1321 West 119th Street, Chicago, Illinois 60643-5109, USA
Toll Free: 1-800-465-2736, Fax: 1-773-341-3049
sales@mifab.com Canada Toll Free: 1-800-387-3880
All sales subject to MIFAB's® Terms and Warranties. Please refer to page 36.

CAST IRON P-TRAP SEAL PRIMER CONNECTOR — MI-600-50

MI-600-50 SERIES			
MODEL NO.	PIPE SIZE	DESCRIPTION	LIST PRICE
MI-602, 3, 4-50	2”, 3”, 4”	Cast Iron Trap Primer Adapter	SEE MPB PRICE BOOK

MI-600-50 SERIES OPTIONAL VARIATIONS		
SUFFIX	DESCRIPTION	LIST PRICE
-13	All galvanized	SEE MPB PRICE BOOK

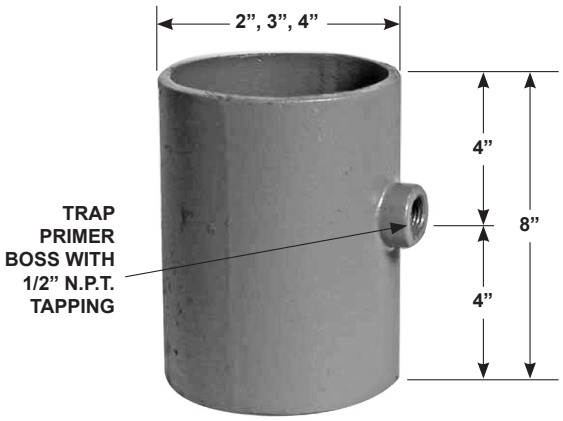

“We have been using the MIFAB MI-GARD floor drain trap seals for the last few years without any issues. Our installers appreciate how easy they are to install, and Shamrock appreciates our installer’s efficiency. Cayias Sales and Marketing does a phenomenal job of keeping more than sufficient stock on hand and representing MIFAB. I appreciate Mifab being a great trade partner.”

– Bill Payne, Senior Project Manager, Shamrock Plumbing, North Salt Lake City, UT

ABS OR PVC “P-TRAP” TRAP SEAL PRIMER CONNECTOR — MI-600

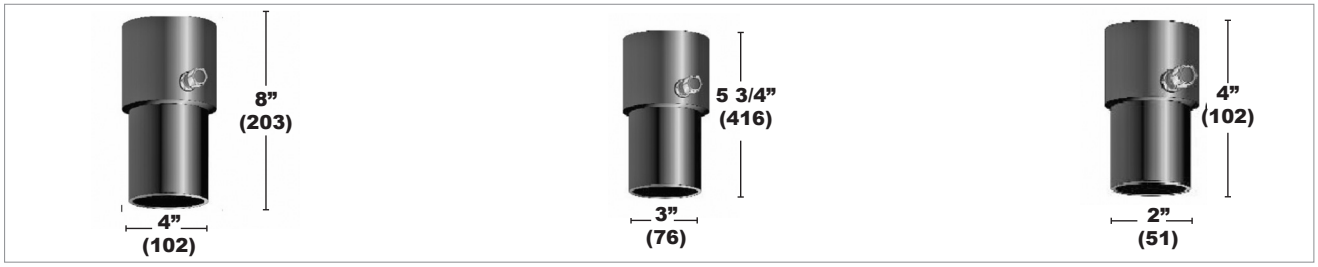

MI-600							
MODEL NO.	CONNECTION SIZE	DESCRIPTION COMPRESSION	BODY MATERIAL	WEIGHT	CARTON QTY.	LIST PRICE	CARTON WEIGHT
MI-602	2”	1/2”	ABS	.30 lbs.	24	$36.50	7.20 lbs.
MI-603	3”	1/2”	ABS	.50 lbs.	18	$48.50	9.00 lbs.
MI-604	4”	1/2”	ABS	.70 lbs.	12	$65.00	8.40 lbs.
MI-612	2”	5/8”	ABS	.30 lbs.	24	$36.50	7.20 lbs.
MI-613	3”	5/8”	ABS	.50 lbs.	18	$48.50	9.00 lbs.
MI-614	4”	5/8”	ABS	.70 lbs.	24	$65.00	8.40 lbs.
MI-622	2”	1/2”	PVC	.30 lbs.	24	$36.50	7.20 lbs.
MI-623	3”	1/2”	PVC	.50 lbs.	18	$48.50	9.00 lbs.
MI-624	4”	1/2”	PVC	.70 lbs.	12	$65.00	8.40 lbs.
MI-632	2”	5/8”	PVC	.30 lbs.	24	$36.50	7.20 lbs.
MI-633	3”	5/8”	PVC	.50 lbs.	18	$48.50	9.00 lbs
MI-634	4”	5/8”	PVC	.70 lbs.	12	$65.00	8.40 lbs.

CALIFORNIA PROPOSITION 65 WARNING. This product contains chemicals known to the State of California to cause cancer and birth defects or other reproductive harm.

FLUID DISTRIBUTION MANIFOLDS - FOR HYDRONIC AND SOLAR HEATING APPLICATIONS

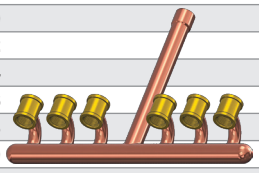

MODEL NO.	DESCRIPTION	LENGTH	LIST PRICE
FDM-2	2 port fluid distribution copper manifold, Type "L", with 1/2" brass NPT connections	6"	$164.30
FDM-4	4 port fluid distribution copper manifold, Type "L", with 1/2" brass NPT connections	10"	$260.37
FDM-6	6 port fluid distribution copper manifold, Type "L", with 1/2" brass NPT connections	14"	$362.44
FDM-8	8 port fluid distribution copper manifold, Type "L", with 1/2" brass NPT connections	18"	$462.88
FDM-10	10 port fluid distribution copper manifold, Type "L", with 1/2" brass NPT connections	22"	$555.68
FDM-12	12 port fluid distribution copper manifold, Type "L", with 1/2" brass NPT connections	26"	$648.20
FDM-14	14 port fluid distribution copper manifold, Type "L", with 1/2" brass NPT connections	30"	$741.81
FDM-16	16 port fluid distribution copper manifold, Type "L", with 1/2" brass NPT connections	34"	$850.71
FDM-18	18 port fluid distribution copper manifold, Type "L", with 1/2" brass NPT connections	38"	$954.69
FDM-20	20 port fluid distribution copper manifold, Type "L", with 1/2" brass NPT connections	42"	$1,046.12
FDM-22	22 port fluid distribution copper manifold, Type "L", with 1/2" brass NPT connections	46"	$1,147.92
FDM-24	24 port fluid distribution copper manifold, Type "L", with 1/2" brass NPT connections	50"	$1,250.00
FDM-26	26 port fluid distribution copper manifold, Type "L", with 1/2" brass NPT connections	54"	$1,341.43
FDM-28	28 port fluid distribution copper manifold, Type "L", with 1/2" brass NPT connections	58"	$1,443.23
FDM-30	30 port fluid distribution copper manifold, Type "L", with 1/2" brass NPT connections	62"	$1,547.21

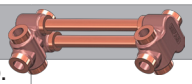

BACK TO BACK MANIFOLDS - TO DISTRIBUTE HOT AND COLD WATER TO FIXTURES MOUNTED BACK TO BACK ON PARTITION

MODEL NO.	DESCRIPTION	LENGTH	LIST PRICE
B2BM-4-.50	4" long, back to back manifold w/ 1/2" line conn. (A+B), 3/8" stub outs (C+D), 1/2" Type "L" copper crossover tubes (E+F)	4"	$377.46
B2BM-4-.75	4" long, back to back manifold w/ 3/4" line conn. (A+B), 1/2" stub outs (C+D), 1/2" Type "L" copper crossover tubes (E+F)	4"	$377.46
B2BM-4-1.00	4" long, back to back manifold w/ 1" line conn. (A+B), 3/4" stub outs (C+D), 3/4" Type "L" copper crossover tubes (E+F)	4"	$377.46
B2BM-6-.50	6" long, back to back manifold w/ 1/2" line conn. (A+B), 3/8" stub outs (C+D), 1/2" Type "L" copper crossover tubes (E+F)	6"	$377.46
B2BM-6-.75	6" long, back to back manifold w/ 3/4" line conn. (A+B), 1/2" stub outs (C+D), 1/2" Type "L" copper crossover tubes (E+F)	6"	$377.46
B2BM-6-1.00	6" long, back to back manifold w/ 1" line conn. (A+B), 3/4" stub outs (C+D), 3/4" Type "L" copper crossover tubes (E+F)	6"	$377.46
B2BM-8-.50	8" long, back to back manifold w/ 1/2" line conn. (A + B), 3/8" stub outs (C + D), 1/2" Type "L" copper crossover tubes (E + F)	8"	$377.46
B2BM-8-.75	8" long, back to back manifold w/ 3/4" line conn. (A + B), 1/2" stub outs (C + D), 1/2" Type "L" copper crossover tubes (E + F)	8"	$377.46
B2BM-8-1.00	8" long, back to back manifold w/ 1" line conn. (A + B), 3/4" stub outs (C + D), 3/4" Type "L" copper crossover tubes (E + F)	8"	$377.46
B2BM-UN.50	Low lead brass castings (2) only w/ 1/2" line conn., 3/8" stub outs and 1/2" copper crossover tube conn. (copper tube by others)	N/A	$355.35
B2BM-UN.75	Low lead brass castings (2) only w/ 3/4" line conn., 1/2" stub outs and 1/2" copper crossover tube conn. (copper tube by others)	N/A	$355.35
B2BM-UN-100	Low lead brass castings (2) only w/ 1" line conn., 3/4" stub outs and 3/4" copper crossover tube conn. (copper tube by others)	N/A	$355.35

COPPER MANIFOLDS - 1" TRUNK SIZE WITH ONE CLOSED END AND ONE OPEN SWT. CONNECTION, 1/2" PEX BARBED CONNECTIONS, 2" CENTERS

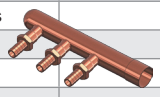

MODEL NO.	DESCRIPTION	NO. OF CONN.	LIST PRICE
CM-CE-PEX-3	Type "L" 1" Copper manifold with closed end, 1", one open SWT. conn., three 1/2" PEX barbed connections, 2" centers	3	$55.13
CM-CE-PEX-4	Type "L" 1" Copper manifold with closed end, 1", one open SWT. conn., four 1/2" PEX barbed connections, 2" centers	4	$66.05
CM-CE-PEX-5	Type "L" 1" Copper manifold with closed end, 1", one open SWT. conn., five 1/2" PEX barbed connections, 2" centers	5	$78.06
CM-CE-PEX-6	Type "L" 1" Copper manifold with closed end, 1", one open SWT. conn., six 1/2" PEX barbed connections, 2" centers	6	$89.25
CM-CE-PEX-7	Type "L" 1" Copper manifold with closed end, 1", one open SWT. conn., seven 1/2" PEX barbed connections, 2" centers	7	$99.62
CM-CE-PEX-8	Type "L" 1" Copper manifold with closed end, 1", one open SWT. conn., eight 1/2" PEX barbed connections, 2" centers	8	$118.18
CM-CE-PEX-9	Type "L" 1" Copper manifold with closed end, 1", one open SWT. conn., nine 1/2" PEX barbed connections, 2" centers	9	$119.27
CM-CE-PEX-10	Type "L" 1" Copper manifold with closed end, 1", one open SWT. conn., ten 1/2" PEX barbed connections, 2" centers	10	$131.55
CM-CE-PEX-12	Type "L" 1" Copper manifold with closed end, 1", one open SWT. conn., twelve 1/2" PEX barbed connections, 2" centers	12	$154.48

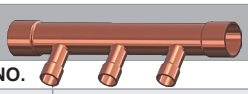

COPPER MANIFOLDS - 1" TRUNK SIZE WITH TWO OPEN SWT. CONNECTIONS, 1/2" SWT. CONNECTIONS, 2 1/2" CENTERS

MODEL NO.	DESCRIPTION	NO. OF CONN.	LIST PRICE
CM-OE-SWT-2	Type "L" 1" Copper manifold with two open SWT. Connections, two 1/2" SWT. connections, 2 1/2" centers	2	$43.94
CM-OE-SWT-3	Type "L" 1" Copper manifold with two open SWT. Connections, three 1/2" SWT. connections, 2 1/2" centers	3	$52.40
CM-OE-SWT-6	Type "L" 1" Copper manifold with two open SWT. Connections, six 1/2" SWT. connections, 2 1/2" centers	6	$85.70
CM-OE-SWT-12	Type "L" 1" Copper manifold with two open SWT. Connections, twelve 1/2" SWT. connections, 2 1/2" centers	12	$148.20

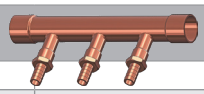

COPPER MANIFOLDS - 1" TRUNK SIZE WITH TWO OPEN SWT CONNECTIONS, 1/2" PEX BARBED CONNECTIONS, 2 1/2" CENTERS

MODEL NO.	DESCRIPTION	NO. OF CONN.	LIST PRICE
CM-OE-PEXB-2	Type "L" 1" Copper manifold with two open SWT. Connections, two PEX Barbed connections, 2 1/2" centers	2	$45.31
CM-OE-PEXB-3	Type "L" 1" Copper manifold with two open SWT. Connections, three PEX Barbed connections, 2 1/2" centers	3	$54.04
CM-OE-PEXB-6	Type "L" 1" Copper manifold with two open SWT. Connections, six PEX Barbed connections, 2 1/2" centers	6	$90.34
CM-OE-PEXB-12	Type "L" 1" Copper manifold with two open SWT. Connections, twelve PEX Barbed connections, 2 1/2" centers	12	$163.21

CALIFORNIA PROPOSITION 65 WARNING. This product contains chemicals known to the State of California to cause cancer and birth defects or other reproductive harm.

COPPER MANIFOLDS - 1" TRUNK SIZE WITH TWO OPEN SWT CONNECTIONS, 1/2" PEX BARBED CONNECTIONS W/ BALL VALVE, 2 1/2" CENTERS

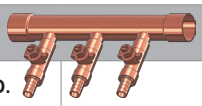

MODEL NO.	DESCRIPTION	NO. OF CONN.	LIST PRICE
CM-OE-PEXBV-2	Type "L" 1" Copper manifold with two open SWT. Connections, two PEX Barbed connections w/ ball valve, 2 1/2" centers	2	$92.79
CM-OE-PEXBV-3	Type "L" 1" Copper manifold with two open SWT. Connections, three PEX Barbed connections w/ ball valve, 2 1/2" centers	3	$118.18
CM-OE-PEXBV-6	Type "L" 1" Copper manifold with two open SWT. Connections, six PEX Barbed connections w/ ball valve, 2 1/2" centers	6	$218.89
CM-OE-PEXBV-12	Type "L" 1" Copper manifold with two open SWT. Connections, twelve PEX Barbed connections w/ ball valve, 2 1/2" centers	12	$416.76

COPPER MANIFOLDS - 1" TRUNK SIZE WITH CLOSED END, 1", ONE OPEN SWT. CONN, 1/2" PEX BARBED CONNECTIONS W/ BALL VALVE, 2" CENTERS

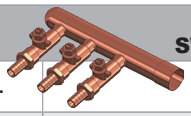

MODEL NO.	DESCRIPTION	NO. OF CONN.	LIST PRICE
CM-CE-PEXBV-3	Type "L" 1" Copper manifold with closed end, 1", one open SWT. conn., three 1/2" PEX barbed conn. w/ ball valve, 2" centers	3	$120.36
CM-CE-PEXBV-4	Type "L" 1" Copper manifold with closed end, 1", one open SWT. conn., four 1/2" PEX barbed conn. w/ ball valve, 2" centers	4	$153.38
CM-CE-PEXBV-5	Type "L" 1" Copper manifold with closed end, 1", one open SWT. conn., five 1/2" PEX barbed conn. w/ ball valve, 2" centers	5	$185.32
CM-CE-PEXBV-6	Type "L" 1" Copper manifold with closed end, 1", one open SWT. conn., six 1/2" PEX barbed conn. w/ ball valve, 2" centers	6	$217.79
CM-CE-PEXBV-7	Type "L" 1" Copper manifold with closed end, 1", one open SWT. conn., seven 1/2" PEX barbed conn. w/ ball valve, 2" centers	7	$250.55
CM-CE-PEXBV-8	Type "L" 1" Copper manifold with closed end, 1", one open SWT. conn., eight 1/2" PEX barbed conn. w/ ball valve, 2" centers	8	$288.21
CM-CE-PEXBV-9	Type "L" 1" Copper manifold with closed end, 1", one open SWT. conn., nine 1/2" PEX barbed conn. w/ ball valve, 2" centers	9	$312.50
CM-CE-PEXBV-10	Type "L" 1" Copper manifold with closed end, 1", one open SWT. conn., ten 1/2" PEX barbed conn. w/ ball valve, 2" centers	10	$347.71
CM-CE-PEXBV-12	Type "L" 1" Copper manifold with closed end, 1", one open SWT. conn., twelve 1/2" PEX barbed conn. w/ ball valve, 2" centers	12	$413.21

COPPER HEATING MANIFOLDS - 72" LONG WITH TWO OPEN SWT CONNECTIONS, 24 CONNECTIONS, 3" CENTERS

MODEL NO.	DESCRIPTION	NO. OF CONN.	LIST PRICE
CHM-PEX-24	Type "L" 1" trunk size, 72" long w/ two open SWT connections, twenty-four 1/2" PEX barbed connections, 3" centers	24	$312.50
CHM-SWT-1-.50-24	Type "L" 1" trunk size, 72" long w/ two open SWT connections, twenty-four 1/2" SWT. connections, 3" centers	24	$316.05
CHM-SWT-1-.75-24	Type "L" 1" trunk size, 72" long w/ two open SWT connections, twenty-four 3/4" SWT. connections, 3" centers	24	$362.44
CHM-SWT-125-.50-24	Type "L" 1 1/4" trunk size, 72" long w/ two open SWT connections, twenty-four 1/2" SWT. connections, 3" centers	24	$429.31
CHM-SWT-125-.75-24	Type "L" 1 1/4" trunk size, 72" long w/ two open SWT connections, twenty-four 3/4" SWT. connections, 3" centers	24	$468.89
CHM-SWT-150-.75-24	Type "L" 1 1/2" trunk size, 72" long w/ two open SWT connections, twenty-four 3/4" SWT. connections, 3" centers	24	$572.87
CHM-SWT-2-.75-24	Type "L" 2" trunk size, 72" long w/ two open SWT connections, twenty-four 3/4" SWT. connections, 3" centers	24	$761.46
CHM-SWT-2-100-24	Type "L" 2" trunk size, 72" long w/ two open SWT connections, twenty-four 1" SWT. connections, 3" centers	24	$793.94

COPPER HEATING MANIFOLDS - 72" LONG WITH TWO OPEN SWT CONNECTIONS, 18 CONNECTIONS, 4" CENTERS

MODEL NO.	DESCRIPTION	NO. OF CONN.	LIST PRICE
CHM-SWT-1-.75-18	Type "L" 1" Copper trunk size, 72" long w/ two open SWT connections, eighteen 3/4" SWT. connections, 4" centers	18	$316.05
CHM-SWT-125-.75-18	Type "L" 1 1/4" Copper trunk size, 72" long w/ two open SWT connections, eighteen 3/4" SWT. connections, 4" centers	18	$409.66
CHM-SWT-150-.75-18	Type "L" 1 1/2" Copper trunk size, 72" long w/ two open SWT connections, eighteen 3/4" SWT. connections, 4" centers	18	$500.00
CHM-SWT-2-.75-18	Type "L" 2" Copper trunk size, 72" long w/ two open SWT connections, eighteen 3/4" SWT. connections, 4" centers	18	$702.51

COPPER HEATING MANIFOLDS - 72" LONG WITH TWO OPEN SWT CONNECTIONS, 12 CONNECTIONS, 6" CENTERS

MODEL NO.	DESCRIPTION	NO. OF CONN.	LIST PRICE
CHM-SWT-1-.75-12	Type "L" 1" Copper trunk size, 72" long w/ two open SWT connections, twelve 3/4" SWT. connections, 6" centers	12	$269.65
CHM-SWT-125-.75-12	Type "L" 1 1/4" Copper trunk size, 72" long w/ two open SWT connections, twelve 3/4" SWT. connections, 6" centers	12	$351.80
CHM-SWT-150-.75-12	Type "L" 1 1/2" Copper trunk size, 72" long w/ two open SWT connections, twelve 3/4" SWT. connections, 6" centers	12	$445.69
CHM-SWT-2-.75-12	Type "L" 2" Copper trunk size, 72" long w/ two open SWT connections, twelve 3/4" SWT. connections, 6" centers	12	$644.65

COPPER MANIFOLD END PIECE - AIR VENT PORTS FOR END OF MANIFOLD

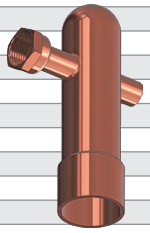

MODEL NO.	DESCRIPTION	LIST PRICE
EP-1-125	Type "L" Copper, 1" trunk size x 1/8" SWT. side connection end piece	$36.57
EP-1-375	Type "L" Copper, 1" trunk size x 3/8" SWT. side connection end piece	$36.57
EP-1.25-125	Type "L" Copper, 1 1/4" trunk size x 1/8" SWT. side connection end piece	$55.13
EP-1.25-375	Type "L" Copper, 1 1/4" trunk size x 3/8" SWT. side connection end piece	$55.13
EP-1.50-125	Type "L" Copper, 1 1/2" trunk size x 1/8" SWT. side connection end piece	$64.96
EP-1.50-375	Type "L" Copper, 1 1/2" trunk size x 3/8" SWT. side connection end piece	$64.96
EP-1-125Fx.50F	Type "L" Copper, 1" trunk size x 1/8" fitting x 1/2" fitting end piece	$47.49
EP-1.25-125Fx.50F	Type "L" Copper, 1 1/4" trunk size x 1/8" fitting x 1/2" fitting end piece	$70.69
EP-1.50-125Fx.50F	Type "L" Copper, 1 1/2" trunk size x 1/8" fitting x 1/2" fitting end piece	$75.33
EP-2-125Fx.50F	Type "L" Copper, 2" trunk size x 1/8" fitting x 1/2" fitting end piece	$93.89

CALIFORNIA PROPOSITION 65 WARNING. This product contains chemicals known to the State of California to cause cancer and birth defects or other reproductive harm.

MI-GARD® FLOOR DRAIN TRAP SEAL

SPECIFICATION: MIFAB® MI-GARD® Series inline floor drain trap seal with UV resistant ABS plastic frame, silicone rubber sealing flapper and four flexible sealing ribs. Tested and certified to the ASSE 1072 Standard and listed with I.A.P.M.O.Specify connection size (1 ½", 2", 3", 3 ½", 4" or 6").

FUNCTION: Used in the outlet connections of floor drain bodies, or the inside of floor drain strainers to seal the opening to prevent odors, sewer gases, and insects from entering up through the floor drain grate. The MI-GARD®'s four flexible silicone sealing ribs ensure easy installation into openings that have variations in size. The MI-GARD® will open to allow drainage and close when there is no water flow. The MI-GARD® can be used in either new construction or retro-fit applications where trap primers were never installed.

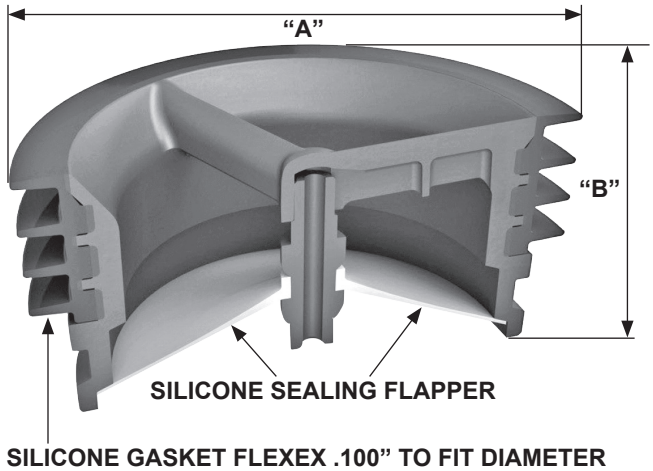

MI-GARD-TS

The MI-GARD Series of floor drain trap seals are tested and third party listed to the A.S.S.E. 1072 Standard.

Approved by: Ontario Building Materials Evalution Commission

MI-GARD®		
MODEL NO.	"A" (PIPE SIZE)	"B" (HEIGHT)
MI-GARD-1.5	1 ½" (38)	2" (51)
MI-GARD-2	2" (51)	2" (51)
MI-GARD-3	3" (76)	2" (51)
MI-GARD-3.5	3 ½" (89)	2" (51)
MI-GARD-4	4" (102)	2" (51)
MI-GARD-TS	For use with MIFAB's Top Set Floor Drain Strainers	2" (51)
MI-GARD-6	6" (152)	2" (51)

MI-GARD® prevents the following from entering through the top of floor drains:
• Odors and sewer gases • Insects

"I do a lot of school work and the school maintenance personnel really like the MIFAB® MI-GARD floor drain trap seal product because it prevents odors and sewer gases from entering into the building through an evaporated trap. The MI-GARD will also fit in the drain body outlet or the floor drain strainer." – Gary Beeson, Manager, Southern Pipe & Supply, Searcy, AR

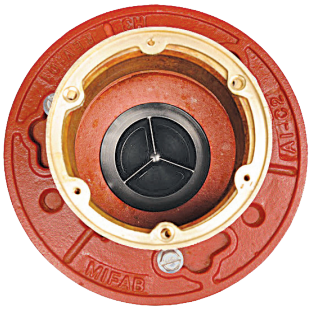

BOTTOM OF BODY

The MI-GARD prevents insects and odors from entering a building through a drain line

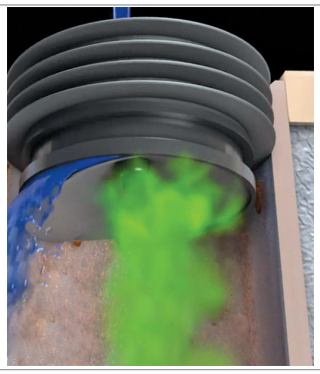

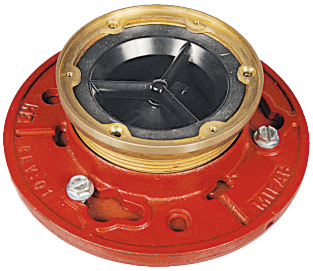

TOP OF STRAINER

Note: The MI-GARD-6 is designed in accordance with industry standards but is not listed.

CALIFORNIA PROPOSITION 65 WARNING. This product contains chemicals known to the State of California to cause cancer and birth defects or other reproductive harm.

Design and dimensions are subject to modification. Prices do not include applicable taxes. Visit www.mifab.com for the most recent product information.

MIFAB®, Inc., 1321 West 119th Street, Chicago, Illinois 60643-5109, USA
Toll Free: 1-800-465-2736, Fax: 1-773-341-3049
sales@mifab.com Canada Toll Free: 1-800-387-3880

All sales subject to MIFAB's® Terms and Warranties. Please refer to page 36.

MIFAB® MI-GARD – FLOOR DRAIN TRAP SEAL DEVICE

INSTALLATION INSTRUCTIONS: The MI-GARD-1.5 (1 ½”), MI-GARD-2 (2”), MI-GARD-3 (3”), MI-GARD-3.5 (3 ½”), MI-GARD-4 (4”) and MI-GARD-6 (6”) Floor Drain Trap Seal Devices install into either the outlet connections of floor drain bodies or into the inside of floor drain strainers. MI-GARD can be used independent or in conjunction with trap seal primers for added protection against sewer gases and insects entering up through the floor drain grate.

To install into the outlet connections of floor drain bodies, remove the grate or strainer and place the appropriate size MI-GARD product (match the opening size 1 ½”, 2”, 3”, 3 ½”, 4” or 6” with the product size) into the inside of the floor drain body outlet connection. The four flexible silicone exterior sealing ribs ensure easy installation into openings that have variations in size.

To install into the inside of floor drain strainers, remove the grate or strainer and place the appropriate size MI-GARD product (match the opening size 1 ½”, 2”, 3”, 3 ½”, 4” or 6” with the product size) into the inside of the throat of the strainer The four flexible silicone exterior sealing ribs ensure easy installation into openings that have variations in size.

LIST PRICES

MODEL NO.	SIZE	LIST PRICE	CARTON QUANTITY
MI-GARD-1.5	1 ½” (38)	**$80.50**	24
MI-GARD-2	2” (51)	**$80.50**	24
MI-GARD-3	3” (76)	**$87.25**	24
MI-GARD-3.5	3 ½” (89)	**$107.50**	24
MI-GARD-4	4” (102)	**$107.50**	24
MI-GARD-TS	Use with MIFAB's Top Set Strainers	**$107.50**	24
MI-GARD-6	6” (152)	**$134.25**	24

LIST PRICES FOR REPAIR PARTS - REPLACEMENT SILICONE SEALING FLAPPERS

MODEL NO.	DESCRIPTION	LIST PRICE
MI-GARD-1.5-FLAP	Replacement silicone sealing flapper for MI-GARD-1.5	**$41.00**
MI-GARD-2-FLAP	Replacement silicone sealing flapper for MI-GARD-2	**$41.00**
MI-GARD-3-FLAP	Replacement silicone sealing flapper for MI-GARD-3	**$44.50**
MI-GARD-3.5-FLAP	Replacement silicone sealing flapper for MI-GARD-3.5	**$54.00**
MI-GARD-4-FLAP	Replacement silicone sealing flapper for MI-GARD-4	**$54.00**
MI-GARD-TS-FLAP	Replacement silicone sealing flapper for MI-GARD-TS	**$54.00**
MI-GARD-6-FLAP	Replacement silicone sealing flapper for MI-GARD-6	**$80.75**

The silicone sealing flapper can be easily removed from all MI-GARD models and replaced with a new flapper.

Click on the below link to see a video of the MI-GARD product:

https://bit.ly/MI-GARD-VIDEO

MI-GARD - FLAPPER

MI-GARD - DISPLAY

CALIFORNIA PROPOSITION 65 WARNING. This product contains chemicals known to the State of California to cause cancer and birth defects or other reproductive harm.

CL-NPB / CLS-NPB PISTON TYPE WATER HAMMER ARRESTORS

CL-A-NPB illustrated

CLS-A-NPB illustrated

- Thick walled, hard drawn "K"copper body.
- Ryton PPS piston with two Parco #5778-80 O-rings and Dow Corning #111 FDA approved silicone lubricant. Ribbed piston design reduces secondary shock and flared piston skirt prevents hard particles suspended in the water supply from contacting the O-rings to provide increased product life.
- Large volume air chamber provides better dampening for superior water hammer arrestor performance.
- Temperature range: Maximum working temperature is 250º F.
- Operating pressure: Up to 350 PSIG
- Surge pressure: Up to 1,500 PSIG
- No access door is required to service MIFAB's water hammer arrestors.

The CL Series of water hammer arrestors are tested and third party listed to the A.S.S.E. 1010 Standard.

NSF LEAD FREE UPC (CL-A-NPB through to and including CL-F-NPB are NSF certified)

"We really like the MIFAB Trap Primers and have had zero quality issues with them. The rep agency and the people from MIFAB do a get job servicing our company."

– Mike Smith, Manager, Northern States Wholesale, Coeur d'Alene, ID

Tested and third party certified to the A.S.S.E. 1010 and A.N.S.I. A112.26.4M Standards and listed with I.A.P.M.O. Patent # 6,539,976

CLS SERIES

MODEL NO.	FIXTURE UNITS SERVED	(A) LENGTH	SWT. CONN. SIZE	SINGLE PIECE WEIGHT	MASTER CARTON QTY.	MASTER CARTON WT.	LIST PRICE PER UNIT
CLS-A-NPB	1-11	8-1/4"	1/2"	.52 lbs.	44	23 lbs.	$31.40
CLS-B-NPB	12-30	10"	3/4"	.75 lbs.	32	24 lbs.	$40.15
CLS-C-NPB	31-60	12-1/2"	1"	1.39 lbs.	22	30.5 lbs.	$96.75
CLS-D-NPB	61-113	11"	1"	2.06 lbs.	8	16.5 lbs.	$129.75
CLS-E-NPB	114-154	13-1/2"	1"	2.5 lbs.	7	17.5 lbs.	$189.00
CLS-F-NPB	155-330	16"	1"	2.92 lbs.	6	17.5 lbs.	$279.00

CL SERIES

MODEL NO.	ASSE RATING	FIXTURE UNITS SERVED	(A) LENGTH	(B) THREADED CONNECTION SIZE	SINGLE PIECE WEIGHT	MASTER CARTON QTY.	MASTER CARTON WT.	LIST PRICE PER UNIT
CL-AA-NPB	AA	1-3	4-3/4"	1/2"	.33 lbs.	50	16.5 lbs.	$29.00
CL-A-NPB	A	1-11	6"	1/2"	.45 lbs.	60	27 lbs.	$31.40
CL-B-NPB	B	12-30	7-1/2"	3/4"	.55 lbs.	42	23 lbs.	$40.15
CL-C-NPB	C	31-60	9"	1"	1 lb.	24	24 lbs.	$96.75
CL-D-NPB	D	61-113	10-1/2"	1-1/4"	2.38 lbs.	8	19 lbs.	$129.75
CL-E-NPB	E	114-154	11-1/4"	1-1/2"	3 lbs.	6	18 lbs.	$189.00
CL-F-NPB	F	155-330	13"	2"	5.83 lbs.	6	35 lbs.	$279.00

The CL-A through F models are also available in Nickel plated (Suffix -NP) and Type 316 Stainless Steel (Suffix -SS). See page 25.

CALIFORNIA PROPOSITION 65 WARNING. This product contains chemicals known to the State of California to cause cancer and birth defects or other reproductive harm.

STAINLESS STEEL BELLOWS WATER HAMMER ARRESTORS WHB

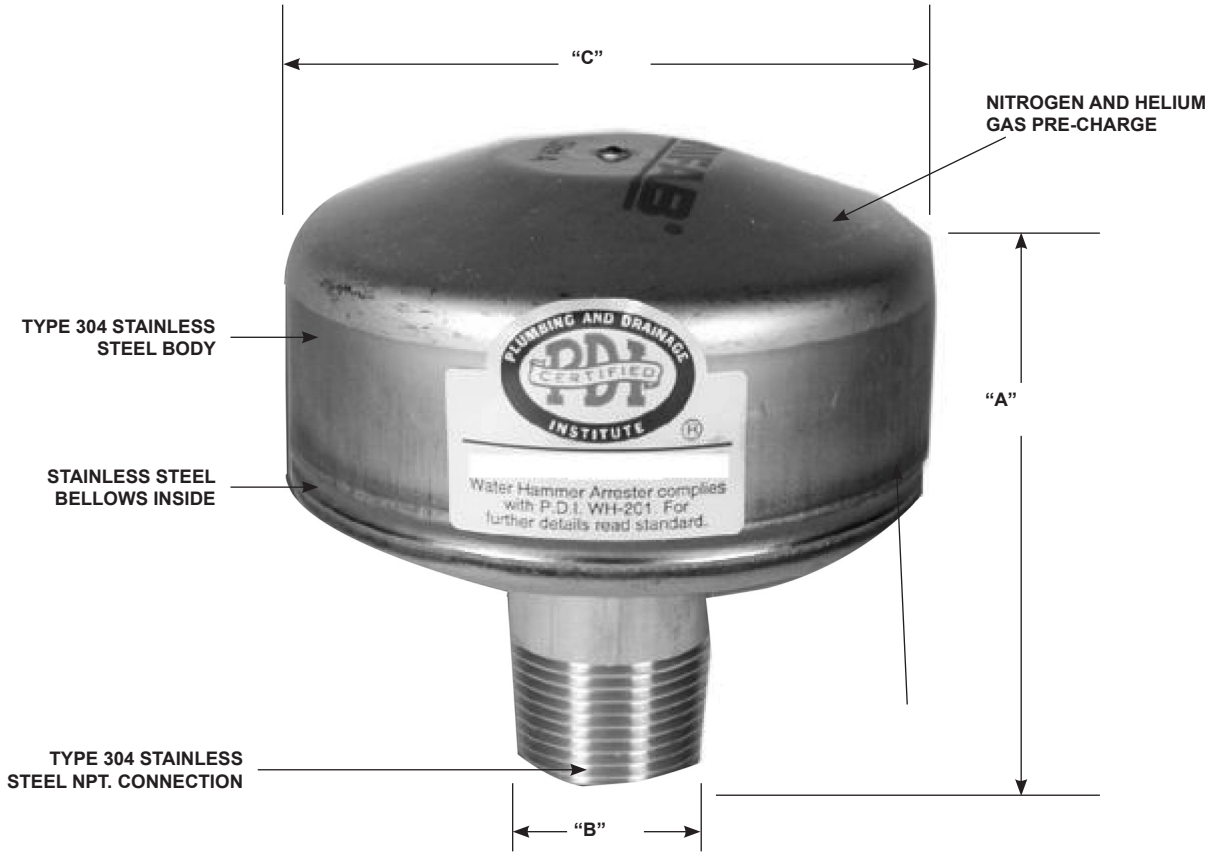

WHB							
MODEL NO.	PDI RATING	FIXTURE UNITS SERVED	PIPE SIZE	"A" HEIGHT	"B" CONN. SIZE	"C" DIAMETER	LIST PRICE
WHB-A	A	1-11	3/4"	3 3/8"	3/4"	3 3/8"	**See MPB Price Book**
WHB-B	B	12-30	1"	4"	1"	3 3/8"	**See MPB Price Book**
WHB-C	C	31-60	1"	4 3/8"	1"	3 3/8"	**See MPB Price Book**
WHB-D	D	61-113	1"	5 3/8"	1"	3 3/8"	**See MPB Price Book**
WHB-E	E	114-154	1"	7 1/4"	1"	3 3/8"	**See MPB Price Book**
WHB-F	F	155-330	1"	7 1/4"	1"	3 3/8"	**See MPB Price Book**

Note: Specify suffix –BA for Buy America Act and/or American Recovery and Reinvestment Act compliant product.

CALIFORNIA PROPOSITION 65 WARNING. This product contains chemicals known to the State of California to cause cancer and birth defects or other reproductive harm.

WATER HAMMER ARRESTOR SIZING

SINGLE AND MULTIPLE FIXTURE BRANCH LINES

The water hammer arrestor sizing procedure for single and multiple fixtures described below conforms to that established by the American Society of Sanitary Engineers in their Standard ASSE-1010. Selection of the water hammer arrestor is based upon the total quantity of Fixture-Units on each cold and hot water branch line.

FIXTURE-UNIT LISTING

Determine the total number of Fixture-Units on each branch line by referring to the list of fixtures in Table One.

WATER HAMMER ARRESTOR SELECTION

Refer to Table Two and select the water hammer arrestor model with proper Fixture-Unit capacity. In long batteries of fixtures over 20 feet in length, more than one water hammer arrestor will be required. (See placement data shown below.)

WATER HAMMER ARRESTOR PLACEMENT DATA

On multiple fixture branch lines up to 20 feet in length, the water hammer arrestor should be installed on the branch line between the last two fixtures being served. The water hammer arrestor should have a Fixture-Unit rating equal to or greater than the total Fixture-Units connected to the branch line.

TABLE ONE

FIXTURE	TYPE OF SUPPLY CONTROL	WEIGHT IN FIXTURE UNITS			
		PUBLIC		PRIVATE	
		C.W.	H.W.	C.W.	H.W.
Water Closet	Flush Valve	10	-	6	-
Water Closet	Flush Tank	5	-	3	-
Pedestrial Urinal	Flush Valve	10	-	-	-
Stall or Wall Urinal	Flush Valve	5	-	-	-
Stall or Wall Urinal	Flush Tank	3	-	-	-
Lavatory	Faucet	1 1/2	1 1/2	1	1
Bathtub	Faucet	2	2	1 1/2	1 1/2
Shower Head	Mixing Valve	2	2	1	2
Bathroom Group	Flush Valve Closet	-	-	8	3
Bathroom Group	Flush Tank Closet	-	-	6	3
Separate Shower	Mixing Valve	-	-	1	2
Service Sink	Faucet	3	3	-	-
Laundry Tubs (1-3)	Faucet	-	-	3	3
Combination Fixture	Faucet	-	-	3	3

TABLE TWO

Water Hammer Arrestor Model No.	A	B	C	D	E	F
Fixture Unit Capacity	1-11	12-32	33-60	61-113	114-154	155-330

On multiple fixture branch lines over 20 feet in length, two water hammer arrestors should be used on each line with the second unit placed at the approximate midpoint of the line. The sum of the Fixture-Unit ratings of the water hammer arrestors on each branch should be equal to or greater than the total Fixture-Units connected to the branch line.

NOTES:

(1) All sizing data in this book are based on flow velocities of 10 feet per second or less.

(2) When the static water pressure in the line exceeds 65 psig, contact the MIFAB® Engineering Department.

(3) If the fixture-unit total has 1/2" fraction, it is to be "rounded-up" to the next larger whole number. If the total is 11 1/2 fixture units, use 12 fixture units.

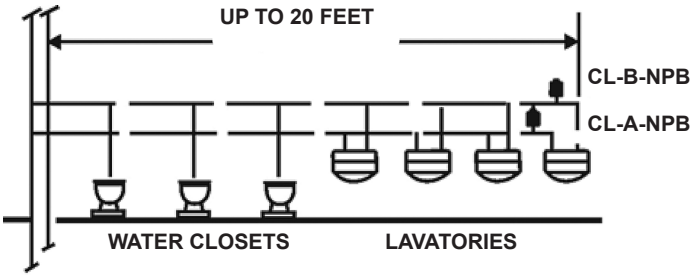

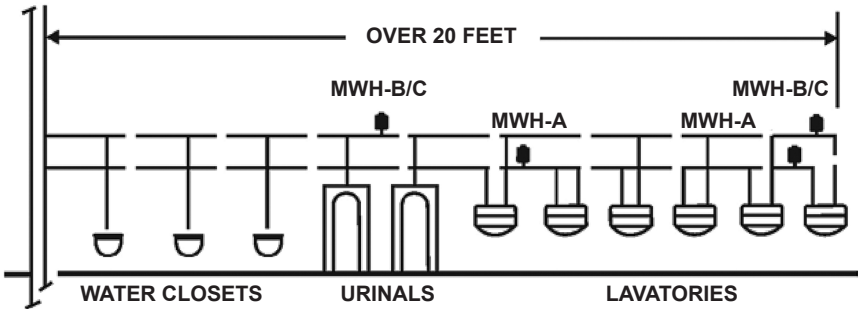

CALIFORNIA PROPOSITION 65 WARNING. This product contains chemicals known to the State of California to cause cancer and birth defects or other reproductive harm.

MI-TEMP-NPB — AUTOMATIC PRESSURE BALANCE VALVE

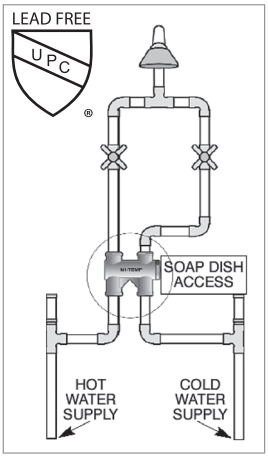

The MI-TEMP-NPB holds a selected water temperature to within one degree from any constant hot water supply regardless of pressure changes in the supply lines. It ensures a blend of mixed hot and cold water at the shower head and is fully automatic - only one moving part will equalize the hot and cold supply line pressures. As supply line pressures fluctuate, the brass piston will move enough to compensate for the change in pressure and release water only at the preselected temperature.

INSTALLATION: The MI-TEMP-NPB can be installed anywhere on a 1/2" (13) water supply line at any angle or position ahead of the control valve(s). When not equipped with an integral shutoff or where there is a shutoff valve installed after the control valve, there shall be stop and check valves on the inlet(s). It can be used with one or two handle valve assemblies and does not need to be installed level. Do not make direct, high temperature soldering connections to the valve body. When making a copper sweat connection, make the adapter solder joint first, then screw the connector into the valve body. The MI-TEMP-NPB should be provided with some type of access for servicing if necessary. The MI-TEMP-NPB can be installed in commercial, institutional, government, educational and residential locations - anywhere a control of water temperature is required. Do not install the MI-TEMP-NPB until ready for final inspection. Standing water will render the valve inoperable. See MI-TEMP-NPB specification sheet on **www.mifab.com** for maintenance instructions.

MI-TEMP-NPB						
MODEL NO.	**DESCRIPTION**	**FLOW RATE**	**LIST PRICE**	**SHIPPING WT.**	**CARTON QTY.**	**CARTON WT.**
MI-TEMP-NPB	Automatic Pressure Balance Valve	12 GPM	**$285.00**	1.60 lbs.	30	**48 lbs.**
MI-TEMP-RK	Repair kit for MI-TEMP	12 GPM	**$121.75**	0.30 lbs.	1	**0.30 lbs.**

MI-THERM — THERMOSTATIC MIXING VALVE

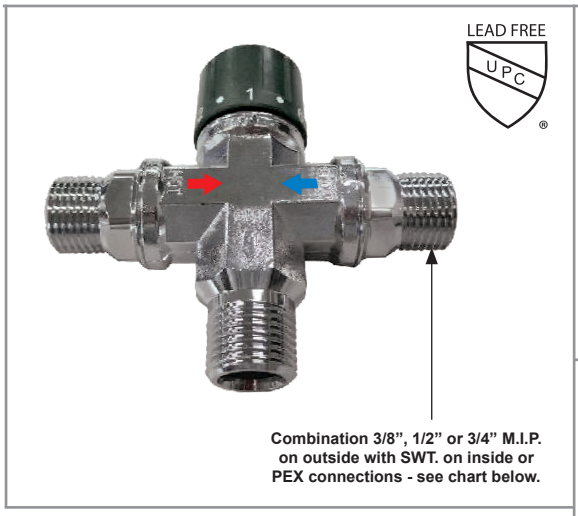

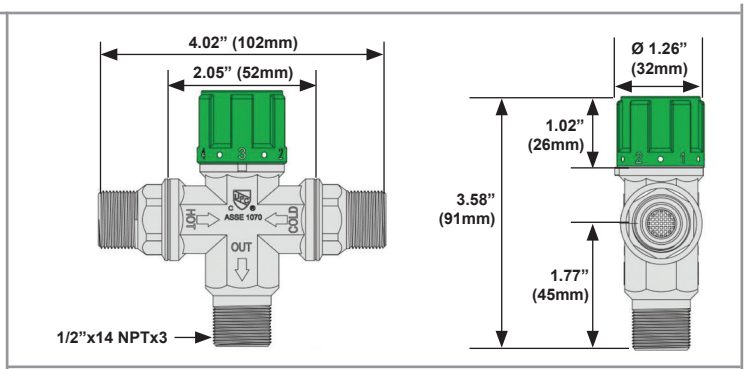

TYPICAL INSTALLATION

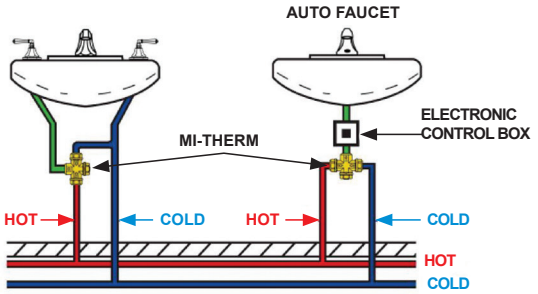

The MIFAB® MI-THERM low lead thermostatic mixing valve is engineered to deliver mixed temperature water to single or multiple outlets. The valve accounts for any change in supply conditions to ensure that the outlet water temperature remains constant. The MI-THERM is tested and third party certified to the A.S.S.E. 1070 Standard and is listed with I.A.P.M.O.

MI-THERM					
MODEL NO.	**DESCRIPTION**	**LIST PRICE**	**SHIPPING WT.**	**CARTON QTY.**	**CARTON WT.**
MI-THERM.38	Thermostatic mixing valve, 3/8" M.I.P. conn. / and 3/8" SWT. conn.	**$318.25**	1.00 lbs.	30	33 lbs.
MI-THERM.38-PEX	Thermostatic mixing valve, 3/8" PEX conn.	**$318.25**	1.00 lbs.	30	33 lbs.
MI-THERM.50	Thermostatic mixing valve, 1/2" M.I.P. conn. / and 1/2" SWT. conn.	**$357.75**	1.20 lbs.	30	36 lbs.
MI-THERM.50-PEX	Thermostatic mixing valve, 1/2" PEX conn.	**$357.75**	1.20 lbs.	30	36 lbs.
MI-THERM.75	Thermostatic mixing valve, 3/4" M.I.P. conn. / and 3/4" SWT. conn.	**$357.75**	1.20 lbs.	30	36 lbs.
MI-THERM.75-PEX	Thermostatic mixing valve, 3/4" PEX conn.	**$357.75**	1.20 lbs.	30	36 lbs.

CALIFORNIA PROPOSITION 65 WARNING. This product contains chemicals known to the State of California to cause cancer and birth defects or other reproductive harm.

IAPMO RESEARCH AND TESTING, INC.

5001 E. Philadelphia Street, Ontario, CA 91761-2816 • (909) 472-4100 • Fax (909) 472-4244 • www.iapmort.org

IAPMO R&T Product Listing

This IAPMO R&T Listing is current as of 1/5/2025

File No. 7746

Product: Trap Seal Primer Devices - Drainage Types and Electronic Design Types

Issued To: MIFAB®, INC.
1321 WEST 119TH STREET
CHICAGO, IL 60643

Identification: Cast brass elbows shall contain the manufacturer`s name or trademark, and model number. The product shall also bear the UPC® certification mark.

Characteristics: Cast brass p-trap/trap primer utilizing grey water from a plumbing fixture. To be installed in accordance with the manufacturer`s instructions and the latest edition of the Uniform Plumbing Code.

Products listed on this certificate have been tested by an IAPMO R&T recognized laboratory. This recognition has been granted based upon the laboratory`s compliance to the applicable requirements of ISO/IEC 17025.

Products are in compliance with the following code(s):
Uniform Plumbing Code (UPC®)

Products are in compliance with the following standard(s):
ASSE 1044-2001

MODELS:

MI-100-5
MI-100-10
MI-100-15
MI-100-20
MI-100-25
MI-100-30
MI-100-35
MI-200
MI-300

This IAPMO R&T Listing is current as of 7/1/2024

CALIFORNIA PROPOSITION 65 WARNING. This product contains chemicals known to the State of California to cause cancer and birth defects or other reproductive harm.

IAPMO RESEARCH AND TESTING, INC.

5001 E. Philadelphia Street, Ontario, CA 91761-2816 • (909) 472-4100 • Fax (909) 472-4244 • www.iapmort.org

IAPMO R&T Product Listing

This IAPMO R&T Listing is current as of 1/5/2025

File No. 3823

Product: Trap Seal Primers Valves

Issued To: MIFAB®, INC.
1321 WEST 119TH STREET
CHICAGO, IL 60643

Identification: Marking shall be permanently affixed to, stamped or cast on the body of the valve with manufacturer`s name or marketers name or trademark, operating range, model number or other identification. The product shall also bear the UPC® certification mark.

Characteristics: Trap seal primer valves designed for water working pressure of at least 125 psi (961 KPa) and to supply water to the trap to provide and maintain its water seal. Supply line and trap makeup water supply connections shall be minimum 1/2" (12.7 mm) pipe size. To be installed in accordance with the manufactures instructions and the requirements of the Uniform Plumbing Code.

Products listed on this certificate have been tested by an IAPMO R&T recognized laboratory. This recognition has been granted based upon the laboratory`s compliance to the applicable requirements of ISO/IEC 17025.

Products are in compliance with the following code(s):
Uniform Plumbing Code (UPC®)
International Plumbing Code (IPC®)

Products are in compliance with the following standard(s):
ASSE 1018-2001

MODELS:

MI-TSP-1, MI-TSP-2,
MI-TSP-3, MR-500, M1-500,
M2-500

This IAPMO R&T Listing is current as of 7/1/2024

CALIFORNIA PROPOSITION 65 WARNING. This product contains chemicals known to the State of California to cause cancer and birth defects or other reproductive harm.

CSA Group

Certification Record

CUSTOMER	CLASS	FILE
MIFAB, Inc. 1321 West 119th St, Chicago IL 60643 USA	6803-10 PLUMBING FITTINGS-Trap Primers **Refer to Class Description for program details**	110892_0_000

- Trap Seal Primer Valves: MI-TSP-1, MI-TSP-2, MI-TSP-3, MR-500, MI-500, M2-500.

Copyright © 2012 CSA International. All rights reserved.

IAPMO RESEARCH AND TESTING, INC.

5001 E. Philadelphia Street, Ontario, CA 91761-2816 • (909) 472-4100 • Fax (909) 472-4244 • www.iapmort.org

IAPMO R&T Product Listing

LEAD FREE

This IAPMO R&T Listing is current as of 1/5/2025

File No. 6798

Product: Lead Free Plumbing Products

Issued To: MIFAB®, INC.
1321 WEST 119TH STREET
CHICAGO, IL 60643

Identification: Each product shall bear permanent and legible markings to identify the manufacturer. This marking shall be the trade name, trademark, or other mark known to identify the manufacturer. The product shall bear the appropriate IAPMO R&T certification mark. The product may also bear either "Lead Free" or "Low Lead" above or in close proximity to the IAPMO R&T certification mark.

Characteristics: Products may include any pipe, pipe fitting, solder, flux, or other plumbing products providing water for human consumption. Products listed below are to be installed in accordance with the manufacturer`s instruction. These products have been verified with weighted average lead content <=0.25%; Solder and flux lead content <=0.2%.

Products listed on this certificate have been tested by an IAPMO R&T recognized laboratory. This recognition has been granted based upon the laboratory`s compliance to the applicable requirements of ISO/IEC 17025.

Products are in compliance with the following standard(s):

Section 1417(d) of the Safe Drinking Water Act
The lead content requirements of Section 116875 of the California Health & Safety Code

MODELS:

M1-500-MPB
M2-500-NPB
MI-100-10
MI-100-15
MI-100-20
MI-100-25
MI-100-30
MI-100-35
MI-100-5
MI-TEMP-NPB Automatic Pressure Balance Valve
MR-500-NPB

This IAPMO R&T Listing is current as of 7/1/2024

CALIFORNIA PROPOSITION 65 WARNING. This product contains chemicals known to the State of California to cause cancer and birth defects or other reproductive harm.

TRAP SEAL PRIMER TROUBLESHOOTING

Following are some things to trouble shoot when it comes to our M-500-NPB Series of Trap Seal Primers (M1-500-NPB, M2-500-NPB, MR-500-NPB, M3-500-NPB):

1) WHAT IS THE LINE PRESSURE FOR THE INSTALLATION?

The M-500-NPB Series of trap seal primers will work within a line pressure range of 35 – 80 psi. Do not subject the trap seal primer to pressure in excess of 80 psi. The trap seal primer must be installed on a cold fresh water line of 1 ½" diameter or less.

2) HOW FAR AWAY IS THE TRAP PRIMER FROM THE SOURCE OF THE PRESSURE DROP?

Anything farther away than 20 feet is an issue, as the farther the primer is away from the source of the pressure drop, the less likely it will sense it and work.

3) WHAT IS THE PRESSURE DROP WHERE THE PRIMER IS?

MIFAB's M-500-NPB Series of primers will work with as little as 3 psi in pressure drop. With today's low flow and consumption faucets, there is less pressure drop being created when the faucets and toilets are used. Therefore, it is recommended to install the trap seal primer as close to the low flow fixture as possible.

4) WATER HAMMER ARRESTORS ON THE LINE CAN ALSO AFFECT PRESSURE DROP IN THE LINE.

It would be best to get a pressure reading where the trap primer is installed. The M-500-NPB series needs a fast, sharp pressure drop to activate. The long pipe run to the trap primer and the water hammer arrestor may not be allowing the trap primer to function properly.

5) LOOK AT THE GAUGE FLUCTUATION

Is it a quick and sharp pressure drop? Or did it gradually drop? The trap primers need a quick pressure drop to activate. A slow gradual pressure drop may not be enough to activate the M-500-NPB. That is why we state that they should be as close to the pressure drop source as possible. The M1-500-NPB has the most buoyant cartridge and should perform the best. If the trap primer looked good and was filled with water then it is the rate of the pressure drop that is causing the issue.

6) WATER HEATERS

Do not install the trap seal primer on a water heater line due to insufficient pressure drop.

7) NOT WORKING

In some cases, the installation conditions cannot deliver the required 3 psi pressure drop to activate MIFAB's MR-500-NPB, M1-500-NPB and / or M2-500-NPB trap seal primers. In such cases, MIFAB® recommends the use of the M3-500-NPB (page 4) adjustable trap seal primer which does not require a pressure drop to activate or the MI-100 (page 8) Series of electronic trap seal primers which also do not require a pressure drop and are electronically programmed to deliver a specific amount of water at specific time intervals. Also refer to the copy in the Trap Seal Primer section (Pages 1-4).

CALIFORNIA PROPOSITION 65 WARNING. This product contains chemicals known to the State of California to cause cancer and birth defects or other reproductive harm.

Design and dimensions are subject to modification. Prices do not include applicable taxes. Visit www.mifab.com for the most recent product information.
MIFAB®, Inc., 1321 West 119th Street, Chicago, Illinois 60643-5109, USA Toll Free: 1-800-465-2736, Fax: 1-773-341-3049
sales@mifab.com Canada Toll Free: 1-800-387-3880
All sales subject to MIFAB's® Terms and Warranties. Please refer to page 36.

M-500-NPB SERIES INSTALLATION INSTRUCTIONS

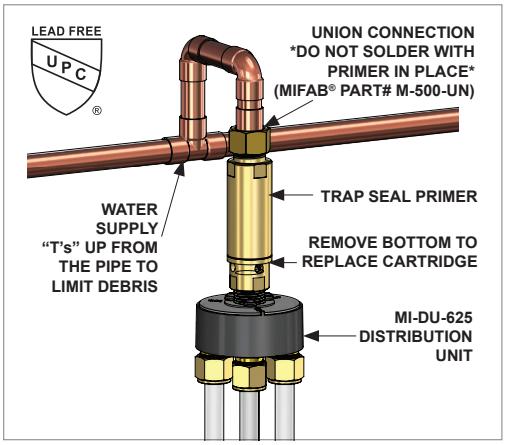

Use a 1 1/8" open end wrench to install the M-500-NPB Series of trap seal primers to the line by using the flats on the top of the trap seal primer. Water lines must be flushed before installing MIFAB's MR-500-NPB Series of trap seal primers. The leading cause of trap seal primer performance problems is interference from foreign debris. The trap seal primers should be cycled at least six times to reduce problems of interference from foreign debris. The following steps are highly recommended:

- Ensure that all flux and other debris is removed from supply line to the primer.
- Use only teflon tape around threads, NEVER use pipe dope.
- Do not solder fittings directly onto the inlet or outlet of the primer, as the primer uses a PE (polyethylene) cartridge.

Failure to follow these instructions will negatively affect performance of the product. MIFAB's primers have a unique design which allows the primer to be taken apart and cleaned before re-assembly. Do this in the event of excess water discharge.

Trap seal primers should be mounted one foot above the finished floor for every twenty feet of floor drain trap make-up water line. For easy access to the trap seal primer, install a union connection above it. Install a line shut off valve upstream of the trap seal primer in order to shut off the water supply when performing maintenance on the trap seal primer.

> *"The MIFAB® MR-500-NPB is a well proven product. We have sold many for many years and I don't recall any ever coming back or a customer being unsatisfied. The distribution boxes are a well thought out item also. Good job MIFAB®!"*
>
> – Rick Sharp, Sales Manager, Lion Plumbing Supply, Miami, FL

INSPECTION INSTRUCTIONS

After installing and pre-cycling the trap seal primer, use any of the four holes to view water discharge from the orifice. A light can be placed opposite the viewing hole to improve clarity in this inspection.

MAINTENANCE INSTRUCTIONS

In order to replace the filter screen, remove the trap seal primer by using an open end wrench on the top set of flats. Grasp the top of the filter screen with fingers, squeeze and remove the filter. Insert the new filter screen by squeezing and pushing it firmly down into the top of the trap seal primer. Re-install the trap seal primer using the top set of flats. In regions that experience heavy residual deposits such as calcium in the water supply, MIFAB's M-500-NPB Series of trap seal primers can be field refurbished by removing the bottom end of the primer, and replacing the cartridge.

Go to **www.mifab.com**
for more information on maintenance of trap seal primers.

CALIFORNIA PROPOSITION 65 WARNING. This product contains chemicals known to the State of California to cause cancer and birth defects or other reproductive harm.

CROSS REFERENCE

PPP TO MIFAB®

ACCESS DOORS

PPP		MIFAB®
C-1212PC	(page 7)	UA1212
C-1212SS	(page 7)	UASS1212
D-88PC	(page 7)	UA0808
D-88SS	(page 7)	UASS0808
D-814PC	(page 7)	UA0814
D-814SS	(page 7)	UASS0814
D-1212PC	(page 7)	UA1212
D-1212SS	(page 7)	UASS1212
D-1416PC	(page 7)	UA1416
D-1416SS	(page 7)	UASS1416
D-1620PC	(page 7)	UA1620
D-1620SS	(page 7)	UASS1620
D-2030PC	(page 7)	UA2030
D-2030SS	(page 7)	UASS2030
D-2424PC	(page 7)	UA2424
D-2424SS	(page 7)	UASS2424
F-88PC	(page 16)	MFRU0808
F-88SS	(page 16)	MFRUSS0808
F-814PC	(page 16)	MFRU0814
F-814SS	(page 16)	MFRUSS0814
F-1212PC	(page 16)	MFRU1212
F-1212SS	(page 16)	MFRUSS1212
F-1416PC	(page 16)	MFRU1416
F-1416SS	(page 16)	MFRUSS1416
F-1620PC	(page 16)	MFRU1620
F-1620SS	(page 16)	MFRUSS1620
F-2030PC	(page 16)	MFRU2030
F-2030SS	(page 16)	MFRUSS2030
F-2424PC	(page 16)	MFRU2424
F-2424SS	(page 16)	MFRUSS2424

AIR GAP FITTINGS

PPP		MIFAB®
AG-500	(page 17)	MI-GAP-NPB
RVAG-750CS	(See MPB book)	MI-CAG-15T
RVAG-750TH	(See MPB book)	MI-CAG-15T

DIELECTRIC NIPPLES

PPP		MIFAB®
19100P	(page 17)	MI-DETT-50
19125P	(page 17)	MI-DETT-75
19145P	(page 17)	MI-DETT-100
19155P	(page 17)	MI-DETT-125
19165P	(page 17)	MI-DETT-150
19175P	(page 17)	MI-DETT-200
19180P	(page 17)	MI-DETT-250
19185P	(page 17)	MI-DETT-300
19195P	(page 17)	MI-DETT-400
19146P	(page 17)	MI-DEGT-100
19156P	(page 17)	MI-DEGT-125
19166P	(page 17)	MI-DEGT-150
19176P	(page 17)	MI-DEGT-200
19181P	(page 17)	MI-DEGT-250
19186P	(page 17)	MI-DEGT-300
19196P	(page 17)	MI-DEGT-400
19200P	(page 17)	MI-DEGG-200
19201P	(page 17)	MI-DEGG-250
19202P	(page 17)	MI-DEGG-300
19203P	(page 17)	MI-DEGG-400

DISTRIBUTION UNITS

PPP		MIFAB®
DU-U	(page 5)	MI-DU
DU-U-500	(page 5)	MI-DU-500
DU-U-625	(page 5)	MI-DU-625
DU-1	(page 5)	MI-DU
DU-4	(page 5)	MI-DU
DU-4-500	(page 5)	MI-DU-500
DU-4-625	(page 5)	MI-DU-625

FLOOR DRAIN TRAP SEALS

PPP		MIFAB®
PDS-2000	(pages 22-23)	MI-GARD-2
PDS-3000	(pages 22-23)	MI-GARD-3
PDS-4000	(pages 22-23)	MI-GARD-4

MANIFOLDS (COPPER) - BACK TO BACK

PPP	MIFAB®
MA-2	B2BM
MU-2	B2BM-UN

MANIFOLDS (COPPER) - FLUID DISTRIBUTION

PPP		MIFAB®
PM-2	(page 20)	FDM-2
PM-4	(page 20)	FDM-4
PM-6	(page 20)	FDM-6
PM-8	(page 20)	FDM-8
PM-10	(page 20)	FDM-10
PM-12	(page 20)	FDM-12
PM-14	(page 20)	FDM-14
PM-16	(page 20)	FDM-16
PM-18	(page 20)	FDM-18
PM-20	(page 20)	FDM-20
PM-22	(page 20)	FDM-22
PM-24	(page 20)	FDM-24
PM-26	(page 20)	FDM-26
PM-28	(page 20)	FDM-28
PM-30	(page 20)	FDM-30

MANIFOLDS (COPPER) - 1" TRUNK SIZE WITH ONE CLOSED END AND ONE OPEN SWT. CONNECTION, 1/2" PEX BARBED CONNECTIONS, 2" CENTERS

PPP		MIFAB®
1003 SBPB	(page 20)	CM-CE-PEX-3
1004 SBPB	(page 20)	CM-CE-PEX-4
1005 SBPB	(page 20)	CM-CE-PEX-5
1006 SBPB	(page 20)	CM-CE-PEX-6
1007 SBPB	(page 20)	CM-CE-PEX-7
1008 SBPB	(page 20)	CM-CE-PEX-8
1009 SBPB	(page 20)	CM-CE-PEX-9
10010 SBPB	(page 20)	CM-CE-PEX-10
10012 SBPB	(page 20)	CM-CE-PEX-12

MANIFOLDS (COPPER) - 1" TRUNK SIZE WITH TWO OPEN SWT. CONNECTIONS, 1/2" SWT. CONNECTIONS, 2 1/2" CENTERS

PPP		MIFAB®
10002500	(page 21)	CM-OE-SWT-2
10003500	(page 21)	CM-OE-SWT-3
10006500	(page 21)	CM-OE-SWT-6
100012500	(page 21)	CM-OE-SWT-12

MANIFOLDS (COPPER) - 1" TRUNK SIZE WITH TWO OPEN SWT. CONNECTIONS, 1/2" PEX BARBED CONNECTIONS, 2 1/2" CENTERS

PPP		MIFAB®
10002500 PB	(page 21)	CM-OE-PEXB-2
10003500 PB	(page 21)	CM-OE-PEXB-3
10006500 PB	(page 21)	CM-OE-PEXB-6
100012500 PB	(page 21)	CM-OE-PEXB-12

MANIFOLDS (COPPER) - 1" TRUNK SIZE WITH TWO OPEN SWT. CONNECTIONS, 1/2" PEX BARBED CONNECTIONS, 2 1/2" CENTERS

PPP		MIFAB®
10002500 PBBV	(page 21)	CM-OE-PEXBV-2
10003500 PBBV	(page 21)	CM-OE-PEXBV-3
10006500 PBBV	(page 21)	CM-OE-PEXBV-6
100012500 PBBV	(page 21)	CM-OE-PEXBV-12

MANIFOLDS (COPPER) - 1" TRUNK SIZE W/ CLOSED END, ONE OPEN SWT. CONN., 1/2" PEX BARBED CONN. W/ BALL VALVES, 2" CENTERS

PPP		MIFAB®
1003 SBPBBV	(page 21)	CM-CE-PEXBV-3
1004 SBPBBV	(page 21)	CM-CE-PEXBV-4
1005 SBPBBV	(page 21)	CM-CE-PEXBV-5
1006 SBPBBV	(page 21)	CM-CE-PEXBV-6
1007 SBPBBV	(page 21)	CM-CE-PEXBV-7
1008 SBPBBV	(page 21)	CM-CE-PEXBV-8
1009 SBPBBV	(page 21)	CM-CE-PEXBV-9
10010 SBPBBV	(page 21)	CM-CE-PEXBV-10
10012 SBPBBV	(page 21)	CM-CE-PEXBV-12

MANIFOLDS (COPPER) - HEATING APPLICATION, 72" LONG, WITH TWO OPEN SWT CONNECTIONS, 24 CONNECTIONS, 3" CENTERS

PPP		MIFAB®
100024500 PBBV	(page 21)	CHM-PEXBV-24
100024500 PB	(page 21)	CHM-PEX-24
100024500	(page 21)	CHM-SWT-1-.50-24
100024750	(page 21)	CHM-SWT-1-.75-24
125024500	(page 21)	CHM-SWT-125-.50-24
125024750	(page 21)	CHM-SWT-125-.75-24
150024750	(page 21)	CHM-SWT-150-.75-24
200024750	(page 21)	CHM-SWT-2-.75-24
2000241000	(page 21)	CHM-SWT-2-100-24

MANIFOLDS (COPPER) - HEATING APPLICATION, 72" LONG, WITH TWO OPEN SWT CONNECTIONS, 18 CONNECTIONS, 4" CENTERS

PPP		MIFAB®
100018750-4	(page 20)	CHM-SWT-1-.75-18
125018750-4	(page 20)	CHM-SWT-125-.75-18
150018750-4	(page 20)	CHM-SWT-150-.75-18
200018750-4	(page 20)	CHM-SWT-2-.75-18

MANIFOLDS (COPPER) - HEATING APPLICATION, 72" LONG, WITH TWO OPEN SWT CONNECTIONS, 12 CONNECTIONS, 6" CENTERS

PPP		MIFAB®
100012750-6	(page 20)	CHM-SWT-1-.75-12
125012750-6	(page 20)	CHM-SWT-125-.75-12
150012750-6	(page 20)	CHM-SWT-150-.75-12
200012750-6	(page 20)	CHM-SWT-2-.75-12

MANIFOLDS (COPPER) - AIR VENT PORTS FOR END OF MANIFOLDS

PPP		MIFAB®
1000125 EP	(page 21)	EP-1-125
1000375 EP	(page 21)	EP-1-375
1250125 EP	(page 21)	EP-1.25-125
1250375 EP	(page 21)	EP-1.25-375
1500125 EP	(page 21)	EP-1.50-125
1500375 EP	(page 21)	EP-1.50-375
1000125-500 EP	(page 21)	EP-1-125Fx.50F
1250125-500 EP	(page 21)	EP-1.25-125Fx.50F
1500125-500 EP	(page 21)	EP-1.50-125Fx.50F
2000125-500 EP	(page 21)	EP-2-125Fx.50F

PRESSURE BALANCE VALVES

PPP		MIFAB®
TRB-2	(page 28)	MI-TEMP-NPB
TCP-2	(page 28)	MI-TEMP-NPB
PTMV-500-70	(page 28)	MI-THERM.50
PTMV-750-70	(page 28)	MI-THERM.75

THERMOSTATIC MIXING VALVES

PPP		MIFAB®
PTMV-500-70	(page 28)	MI-THERM.50
PTMV-750-70	(page 28)	MI-THERM.75

TRAP SEAL PRIMERS

PPP		MIFAB®
CPO-500	(page 4)	MR-500-NPB
FVP-1VB	(page 4)	MI-702
LTP-1500	(page 4)	MI-750
PR-500	(page 4)	MR-500-NPB
PR-500SS	(page 4)	MR-500-SS
P1-500	(page 4)	M1-500-NPB
P2-500	(page 4)	M2-500-NPB
PO-500	(page 4)	MR-500-NPB
PRO1-500	(page 5)	MI-TSP
PRO1-ULP500	(page 5)	MI-TSP-CP
WCP-1	(page 18)	WCTSP-1

CALIFORNIA PROPOSITION 65 WARNING. This product contains chemicals known to the State of California to cause cancer and birth defects or other reproductive harm.

Design and dimensions are subject to modification. Prices do not include applicable taxes. Visit www.mifab.com for the most recent product information.

MIFAB®, Inc., 1321 West 119th Street, Chicago, Illinois 60643-5109, USA
Toll Free: 1-800-465-2736, Fax: 1-773-341-3049
sales@mifab.com Canada Toll Free: 1-800-387-3880

All sales subject to MIFAB's® Terms and Warranties. Please refer to page 36.

CROSS REFERENCE

TRAP SEAL PRIMERS (ELECTRONIC)

PPP		MIFAB®
MP-500-12V	(page 11)	MI-300-BP-LM
MP-500-24V	(page 10)	MI-300-24VDC-LM
MP-500-115V	(page 10)	MI-300-120VAC-LM
MP-500-220V	(page 10)	MI-300-220VAC-LM
MPB-500-12V	(page 12)	MI-300-BP-ENC
MPB-500-24V	(page 13)	MI-350-DU-24VDC
MPB-500-115V	(page 13)	MI-350-DU-120VAC
MPB-500-220V	(page 13)	MI-350-DU-220VDC
MPB-500-EMS-24V	(page 13)	MI-350-DU-24VDC
PT-4	(page 8)	MI-100-4
PT-4-EMS	(page 8)	MI-100-4
PTS-4	(page 8)	MI-100-4
PTS-4-EMS	(page 8)	MI-100-4
PT-6	(page 8)	MI-100-6
PT-6-EMS	(page 8)	MI-100-6
PTS-6	(page 8)	MI-100-6
PTS-6-EMS	(page 8)	MI-100-6
PT-8	(page 8)	MI-100-8
PT-8-EMS	(page 8)	MI-100-8
PTS-8	(page 8)	MI-100-8
PTS-8-EMS	(page 8)	MI-100-8
PT-10	(page 8)	MI-100-10
PT-10-EMS	(page 8)	MI-100-10
PTS-10	(page 8)	MI-100-10
PTS-10-EMS	(page 8)	MI-100-10
PT-12	(page 8)	MI-100-12
PT-12-EMS	(page 8)	MI-100-12
PTS-12	(page 8)	MI-100-12
PTS-12-EMS	(page 8)	MI-100-12
PT-1320	(page 8)	MI-100-20
PT-1320-EMS	(page 8)	MI-100-20
PTS-1320	(page 8)	MI-100-20
PTS-1320-EMS	(page 8)	MI-100-20
PT-2130	(page 8)	MI-100-30
PT-2130-EMS	(page 8)	MI-100-30
PTS-2130	(page 8)	MI-100-30
PTS-2130-EMS	(page 8)	MI-100-30
SMP-500-24V	(page 10)	MI-200-24VDC-LM-3P
SMP-500-115V	(page 10)	MI-200-120VAC-LM-3P
SMP-500-220V	(page 10)	MI-200-220VAC-LM-3P
SP-500-24V	(page 10)	MI-200-24VDC-LM

TRAP SEAL PRIMER CONNECTORS

PPP		MIFAB®
PPA-2A375	(page 19)	MI-602
PPA-3A375	(page 19)	MI-603
PPA-4A375	(page 19)	MI-604
PPA-2A500	(page 19)	MI-612
PPA-3A500	(page 19)	MI-613
PPA-4A500	(page 19)	MI-614
PPA-2A625	(page 19)	MI-612
PPA-3A625	(page 19)	MI-613
PPA-4A625	(page 19)	MI-614
PPA-2P375	(page 19)	MI-622
PPA-3P375	(page 19)	MI-623
PPA-4P375	(page 19)	MI-624
PPA-2P500	(page 19)	MI-632
PPA-3P500	(page 19)	MI-633
PPA-4P500	(page 19)	MI-634
PPA-2P625	(page 19)	MI-632
PPA-3P625	(page 19)	MI-633
PPA-4P625	(page 19)	MI-634

WATER HAMMER ARRESTORS

PPP		MIFAB®
SBHA-500A	(page 25)	WHB-A
SBHA-750B	(page 25)	WHB-B
SBHA-1000C	(page 25)	WHB-C
SBHA-1250D	(page 25)	WHB-D
SBHA-1500E	(page 25)	WHB-E
SBHA-2000F	(page 25)	WHB-F
SC-500	(page 24)	CL-A-NPB
SC-500A	(page 24)	CL-A-NPB
SC-750	(page 24)	CL-B-NPB
SC-750B	(page 24)	CL-B-NPB
SC-1000	(page 24)	CL-C-NPB
SC-1000C	(page 24)	CL-C-NPB
SC-1250D	(page 24)	CL-D-NPB
SC-1500E	(page 24)	CL-E-NPB
SC-2000F	(page 24)	CL-F-NPB
SS Series	(page 25)	CL-SS Series
SNP Series	(page 25)	CL-NP Series

SIOUX CHIEF TO MIFAB®

TRAP SEAL PRIMERS

SIOUX CHIEF		MIFAB®
695-01	(page 4)	MR-500-NPB
695-Y52	(page 5)	MI-DU
695-D20	(page 5)	MI-DU
695-D30	(page 5)	MI-DU
695-D40	(page 5)	MI-DU
695-D432	(page 5)	MI-DU
695-D432F	(page 5)	MI-DU
695-D4325	(page 5)	MI-DU

WATER HAMMER ARRESTORS

SIOUX CHIEF		MIFAB®
660-2	(page 24)	CL-A-NPB
652-A	(page 24)	CL-A-NPB
653-B	(page 24)	CL-B-NPB
654-C	(page 24)	CL-C-NPB
655-D	(page 24)	CL-D-NPB
656-E	(page 24)	CL-E-NPB
657-F	(page 24)	CL-F-NPB
660-S	(page 24)	CLS-A-NPB
652-AS	(page 24)	CLS-A-NPB
653-BS	(page 24)	CLS-B-NPB
654-CS	(page 24)	CLS-C-NPB
655-DS	(page 24)	CLS-D-NPB
656-ES	(page 24)	CLS-E-NPB
657-FS	(page 24)	CLS-F-NPB
660-S	(page 24)	CLS-A-NPB
660-3S	(page 24)	CLS-B-NPB
660-2	(page 24)	CL-AA-NPB

JAY R. SMITH TO MIFAB®

TRAP SEAL PRIMERS

JRS		MIFAB®
260-SC	(page 5)	MI-TSP-1 / MI-DU
260-T	(page 5)	MI-TSP-2 / MI-DU
261-SC	(page 5)	MI-TSP-1
261-T	(page 5)	MI-TSP-2
2698	(page 18)	MI-750
2699	(page 5)	MI-TSP-2
2699-1	(page 5)	MI-TSP-1

WATER HAMMER ARRESTORS

JRS		MIFAB®
520-SC-AA	(page 24)	CLS-AA-NPB
520-SC-A	(page 24)	CLS-A-NPB
520-SC-B	(page 24)	CLS-B-NPB
520-SC-C	(page 24)	CLS-C-NPB
520-SC-D	(page 24)	CLS-D-NPB
520-SC-E	(page 24)	CLS-E-NPB
520-SC-F	(page 24)	CLS-F-NPB
520-T-AA	(page 24)	CL-AA-NPB
520-T-A	(page 24)	CL-A-NPB
520-T-B	(page 24)	CL-B-NPB
520-T-C	(page 24)	CL-C-NPB
520-T-D	(page 24)	CL-D-NPB
520-T-E	(page 24)	CL-E-NPB
520-T-F	(page 24)	CL-F-NPB
5005	(page 25)	WHB-A
5010	(page 25)	WHB-B
5020	(page 25)	WHB-C
5030	(page 25)	WHB-D
5040	(page 25)	WHB-E
5050	(page 25)	WHB-F
5205	(page 24)	CL-A-NPB
5210	(page 24)	CL-B-NPB
5220	(page 24)	CL-C-NPB
5230	(page 24)	CL-D-NPB

JOSAM TO MIFAB®

TRAP SEAL PRIMERS

JOSAM		MIFAB®
88250	(page 5)	MI-TSP-2
88250-90	(page 5)	MI-TSP-1
88250-91	(page 5)	MI-TSP-3
88300	(page 4)	MR-500-NPB

WATER HAMMER ARRESTORS

JOSAM		MIFAB®
75001-A	(page 25)	WHB-A
75002-B	(page 25)	WHB-B
75003-C	(page 25)	WHB-C
75004-D	(page 25)	WHB-D
75005-E	(page 25)	WHB-E
75006-F	(page 25)	WHB-F
75000-S	(page 24)	CL-AA-NPB
75001-S	(page 24)	CL-A-NPB
75002-S	(page 24)	CL-B-NPB
75003-S	(page 24)	CL-C-NPB
75004-S	(page 24)	CL-D-NPB
75005-S	(page 24)	CL-E-NPB
75006-S	(page 24)	CL-F-NPB

WADE TO MIFAB®

TRAP SEAL PRIMERS

WADE		MIFAB®
2400-S	(page 5)	MI-TSP-1
2400-T	(page 5)	MI-TSP-2
2400-MF	(page 5)	MI-DU
2400-M	(page 18)	MI-750
2400-P	(page 18)	MI-750

WATER HAMMER ARRESTORS

WADE		MIFAB®
5	(page 25)	WHB-A
10	(page 25)	WHB-B
20	(page 25)	WHB-C
50	(page 25)	WHB-D
75	(page 25)	WHB-E
100	(page 25)	WHB-F
5-P	(page 24)	CL-A-NPB
10-P	(page 24)	CL-B-NPB
20-P	(page 24)	CL-C-NPB
50-P	(page 24)	CL-D-NPB
75-P	(page 24)	CL-E-NPB
100-P	(page 24)	CL-F-NPB

WATTS TO MIFAB®

TRAP SEAL PRIMERS

WATTS		MIFAB®
TSP	(page 5)	MI-TSP-1
TSP-1	(page 5)	MI-TSP-2
A-200	(page 5)	MI-TSP-2
A200-S	(page 5)	MI-TSP-1
A200T	(page 5)	MI-TSP-2
MS-810	(page 5)	MI-TSP-1

WATER HAMMER ARRESTORS

WATTS		MIFAB®
SG-050	(page 24)	CL-A-NPB
SG-75	(page 24)	CL-B-NPB
SG-100	(page 24)	CL-C-NPB
SG-125	(page 24)	CL-D-NPB
SG-150	(page 24)	CL-E-NPB
SG-200	(page 24)	CL-F-NPB
SG-A	(page 25)	WHB-A
SG-B	(page 25)	WHB-B
SG-C	(page 25)	WHB-C
SG-D	(page 25)	WHB-D
SG-E	(page 25)	WHB-E
SG-F	(page 25)	WHB-F
SS-A	(page 25)	WHB-A
SS-B	(page 25)	WHB-B
SS-C	(page 25)	WHB-C
SS-D	(page 25)	WHB-D
SS-E	(page 25)	WHB-E
SS-F	(page 25)	WHB-F

ZURN LIGHT COMMERCIAL TO MIFAB®

TRAP SEAL PRIMERS

ZURN		MIFAB®
TP2920	(page 5)	MI-TSP-1
TP2922-PC	(page 18)	MI-700
TP2923-PC	(page 18)	MI-701
TS2900-IP2	(see MPB price book)	TS1002
TS2900-IP3	(see MPB price book)	TS1003
Z1020	(page 8,9)	MI-100
Z1021	(page 18)	MI-750
Z1022-SF	(page 5)	MI-TSP-1
Z1022-IP	(page 5)	MI-TSP-2
Z1022-SFU	(page 5)	MI-TSP-3
Z1023	(page 18)	MI-600-50

WATER HAMMER ARRESTORS

ZURN		MIFAB®
WH2950-AA	(page 24)	CL-AA-NPB
WH2950-A	(page 24)	CL-A-NPB
WH2950-B	(page 24)	CL-B-NPB
WH2950-C	(page 24)	CL-C-NPB
WH2950-D	(page 24)	CL-D-NPB
Z1700-100	(page 25)	WHB-A
Z1700-200	(page 25)	WHB-B
Z1700-300	(page 25)	WHB-C
Z1700-400	(page 25)	WHB-D
Z1700-500	(page 25)	WHB-E
Z1700-600	(page 25)	WHB-F

CALIFORNIA PROPOSITION 65 WARNING. This product contains chemicals known to the State of California to cause cancer and birth defects or other reproductive harm.

TERMS AND CONDITIONS

WHOLESALE DISCOUNT:

Contact MIFAB® or your local representative for your applicable discount structure.

FREIGHT ALLOWANCE: Ex Works, MIFAB's Chicago, Illinois Factory or Manufacturer Representative's warehouse with full motor freight allowed on shipments of $3,500.00 Net or more, within the continental U.S.A. or Canada, except Alaska, Hawaii and Puerto Rico. MIFAB® reserves the right to choose the carrier and route of shipment. Alaska: Ex Works, Seattle, WA. Hawaii: Freight allowed on shipments of $3,500.00 or more only when shipped from West Coast, U.S. Puerto Rico: Ex Works, Miami, Florida. There is no allowance for United Parcel Service, Federal Express or Shipment by air service. Full motor freight is allowed on shipments of $3,500.00 Net or more, within the continental U.S.A. and Canada for any combination of BEECO, Counterline, No Hub Coupling, Trench Drain, Access Door and Trap Seal Primer products. Shipping dates are estimates and time of delivery is not the essence of the sale of the contract. Therefore, under no circumstances will MIFAB® have any responsibility on account of any delays in manufacture, transportation, or otherwise. Additional freight services such as construction site delivery, lift gate delivery service, re-consigned freight or notification charges, are not included in full freight allowance terms, and will result in additional freight charges.

QUOTATION TERMS: List Price and discount protected for 30 days from date issued by MIFAB®. Orders received within this period must be released for shipment within 30 days from date of purchase order, otherwise, prices will be those that are in effect at the time of shipment.

PAYMENT TERMS: Terms of payment are Net 30 days from the date of the invoice. All pricing in United States currency unless sold in Canada in which case Canadian dollars is the currency used. The Buyer shall pay all sales, consumers, and / or any other applicable taxes. Past due accounts will be subject to a 2% per month service charge from the date of the invoice. If any proceedings be instructed by or against Buyer under any bankruptcy or insolvency law, or if Buyer shall fail to make timely payment on this or any other order, or if, in MIFAB's judgment, Buyer's financial situation justifies such action, MIFAB® may, at its election, require payment in advance or cancel the order as to any unshipped item and require payment of its reasonable cancellation charges. If Buyer delays completion of manufacture, MIFAB® may elect to require payment according to percentage of completion. Equipment held for Buyer shall be at Buyer's risk and expense. In all cases, regardless of partial payment, title to the Products shall remain with MIFAB® until payment for the Products (including any notes given therefore) has been made in full. Should legal action be necessary to enforce payment of an unpaid invoice, the Buyer will assume full responsibility for any court costs and reasonable attorney fees. All orders subject to credit check and approval prior to shipment. Confirmed irrevocable letter of credit or cash in advance of shipment is required for accounts without an established line of credit. Minimum invoice amount is $100.00. MIFAB® reserves the right to apply a minimum order charge to equal $100.00. MIFAB's Accounting Department must be notified of potential pricing errors within 30 days of the invoice date. Any terms and conditions stated on Buyer's orders which are inconsistent with MIFAB's quotation and Terms and Warranties shall be of no effect.

RETURNED GOODS RESTOCKING CHARGE: Standard product may be returned within a one year period only with written permission from MIFAB®. All products in catalog are not considered Standard. Standard product to be determined by MIFAB®. Returned goods are subject to a 25% restocking charge, plus cost of reconditioning, if necessary, to make material saleable. Material must be returned to MIFAB® freight prepaid only after written permission from MIFAB® to accept the returned material. Buyer must provide copy of the original invoice on which the material was charged. The original outgoing freight cost to ship the order will be deducted from the credit. Credit allowance will be in the form of merchandise credit only-not cash credit which must be used within 12 months of the date of issue. The value of a return must total $100.00 to qualify for credit allowance. Galvanized and acid resistant epoxy coated material will be credited to value of cast iron, and chrome plated at value of nickel bronze. No credit will be allowed for auxiliary tappings, discontinued, or made to order items. Products designated non stock and / or that have been specially made (require a sign off drawing by MIFAB®) are not subject to return or cancellation.

LIMITED WARRANTY: MIFAB® warrants each product against defects in material and workmanship for a period of one year from the date of original shipment. In the event of such defects within the warranty period, MIFAB® will, at its option, replace or recondition the product without charge. This shall constitute the exclusive remedy for breach of warranty, and MIFAB® shall not be responsible for any incidental or consequential damages, including, without limitation, damages or other costs resulting from labor charges, delays, vandalism, negligence, fouling caused by foreign material, damage from adverse water conditions, chemicals, or any other circumstances over which MIFAB® has no control. This warranty shall be invalidated by any abuse, misuse, misapplication or improper installation of the product.

MIFAB® MAKES NO OTHER WARRANTIES EXPRESSED OR IMPLIED AS PROVIDED IN THIS LIMITED WARRANTY.

ILLUSTRATIONS OR TYPICAL INSTALLATIONS: The typical installations for various products in each product section are intended to illustrate the

products and their options. Under no circumstances are they to be construed as recommended installation procedures. Consult local codes and project specifications for proper installation instructions.

ALL SALES SUBJECT TO MIFAB's TERMS AND WARRANTIES.

NOTE: Prices and terms are subject to change without notice and supersede all previous quotations. The right is reserved to change or modify product design or construction without prior notice and without incurring any obligation to make similar changes and modifications to product previously or subsequently sold. Contact MIFAB® for any clarification.

CONTENTS © MIFAB® INC. Copyright 2025

CALIFORNIA PROPOSITION 65 WARNING. This product contains chemicals known to the State of California to cause cancer and birth defects or other reproductive harm.

MIFAB CATALOGS

MPB-2025-04-USA SPECIFICATION DRAINAGE (LIT-067)

CLPB-2025-04 LIGHT COMMERCIAL PRODUCTS (LIT-048)

AD-2025-05-USA ACCESS DOORS (LIT-043)

BEECO-2025 BACKFLOW PREVENTERS, AND ACCESSORIES (LIT-071)

NH-2025 NO HUB COUPLINGS (LIT-044)

TDPC-2025-04 POLYMER CONCRETE TRENCH DRAINS (LIT-076)

TD-2025-04 GRP AND STEEL TRENCH DRAINS (LIT-046)

TDSD-2025-04 SHOWER DRAINS (LIT-077)

TDSS-2025-04 STAINLESS STEEL TRENCH DRAINS (LIT-072)

ROOFGUARD-2020 ROOFGUARD ROOF DOMES (LIT-058)

C-PORT-2023 ROOFTOP RUBBER PIPE SUPPORTS (LIT-047)

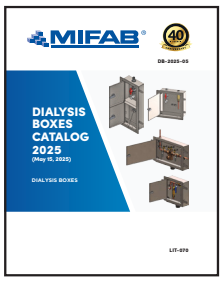

DB-2025-05 DIALYSIS BOXES (LIT-070)

HYDROMAX-2020 SIPHONIC DRAINAGE (LIT-082)

INT-2025 INTERCEPTORS & ACID NEUTRALIZATION TANKS (LIT-095)

TSP-2025 TRAP SEAL PRIMERS (LIT-062)

CALIFORNIA PROPOSITION 65 WARNING. This product contains chemicals known to the State of California to cause cancer and birth defects or other reproductive harm.

TSP-2025

TRAP SEAL PRIMERS CATALOG 2025

(May 15, 2025)

TRAP SEAL PRIMERS AND WATER HAMMER ARRESTORS

PRESSURE DROP ACTIVATED - ELECTRONIC - FLOOR DRAIN SEALS

LIT-062