MOEN

Buy it for looks. Buy it for life.®

Specifications

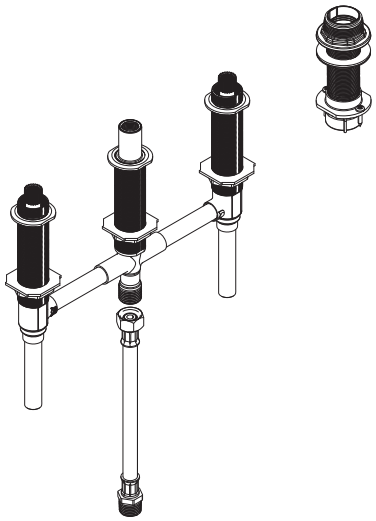

Model: 9796

Moen®
Roman Tub High Flow
Rough-In Valve 10" - Fixed Type

104465 Thermostatic mixing valve sold separately is certified to ASSE 1070 and CSA B-125.3

DESCRIPTION
- Metal construction
- Installs on 10"(254mm) centers
- Designed to be installed on finished decks up to 2-5/8" (67mm)
- 1/2" CC inlets
- Includes test plug

OPERATION
- Can be installed with any Moen deck mounted roman tub trim kit
- Rotate hot side handle counterclockwise to open (clockwise to close) and the cold side handle clockwise to open (counterclockwise to close)

FLOW
- Designed to deliver 15.3 gpm at 45 psi. (58L/min)

CARTRIDGE
- Nonmetallic and stainless steel materials

STANDARDS
- Designed and manufactured to comply with the applicable requirements of: ASME A112.18.1/CSA B-125.1 and all applicable requirements referenced therein

WARRANTY
- Lifetime limited warranty against leaks, drips and finish defects to the original consumer purchaser
- 5 year warranty if used in commercial installations

NOTE: Plumbing codes require this product to be used with a device conforming to ASSE.

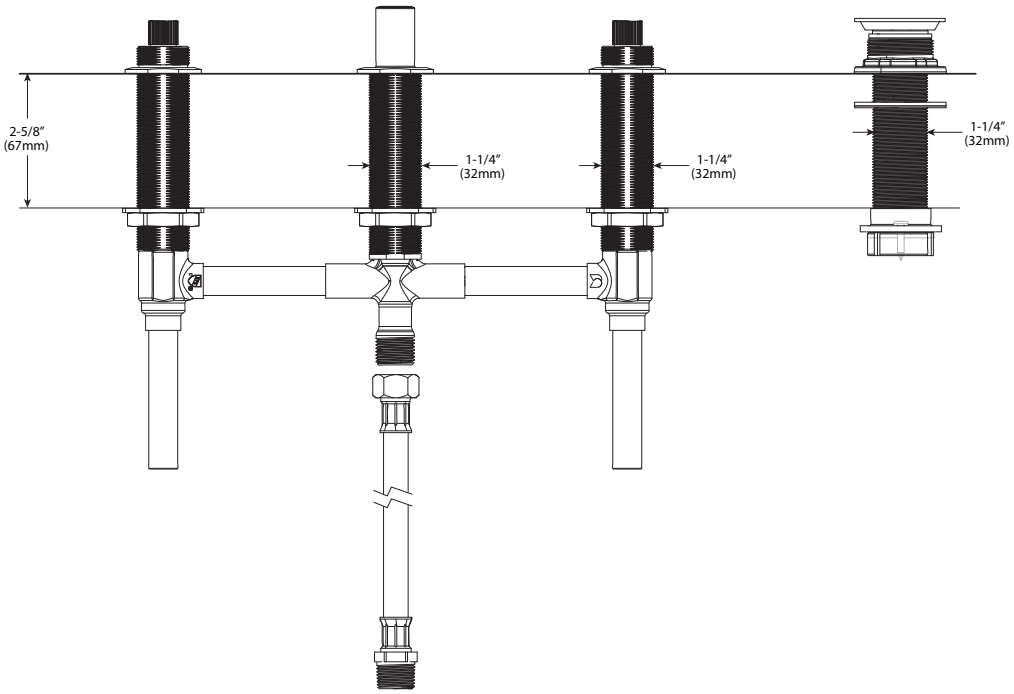

CRITICAL DIMENSIONS

(DO NOT SCALE)