MOEN

Buy it for looks. Buy it for life.®

Specifications

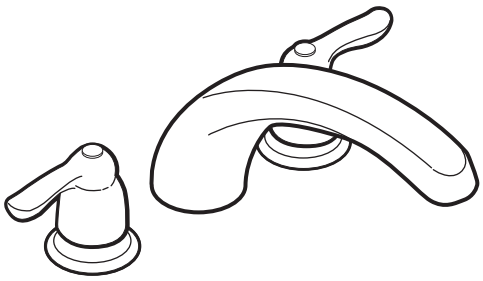

CHATEAU®
Two-Handle Roman Tub Trim

Models: T990 series

Valves: 4792, 4793, 4794, 4796, 4797, 4798

DESCRIPTION
- Metal construction with various finishes identified by suffix

OPERATION
- Lever style handles with hot and cold color indicator
- Rotate hot side handle counterclockwise to open (clockwise to close) and the cold side handle (clockwise to open) and (counterclockwise to close)

STANDARDS
- Third party certified to ASME A112.18./CSA B-125.1, and all applicable requirements referenced therein
- **ADA** for lever handles

WARRANTY
- Lifetime limited warranty against leaks, drips and finish defects to the original consumer purchaser
- 5 year warranty if used in commercial installations

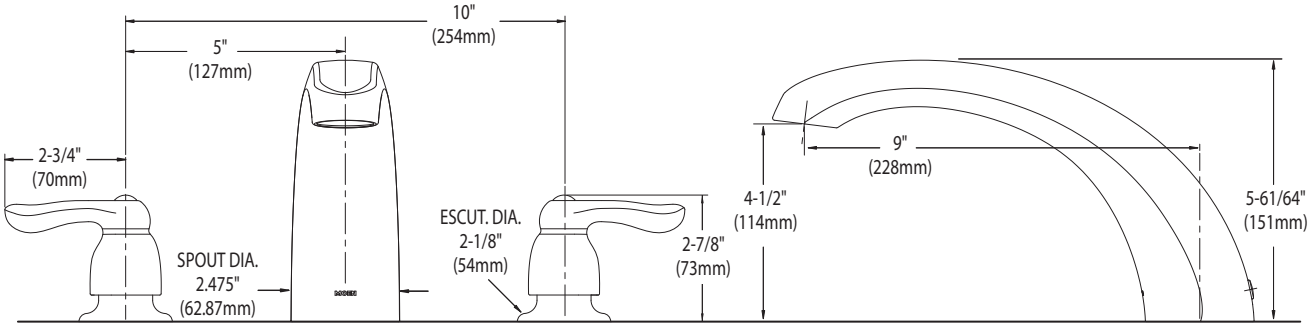

CRITICAL DIMENSIONS

(DO NOT SCALE)