NDR Electric

Tel. : 514 695-8228 1 855 739-8228
Fax : 514 695-9009 1 855 812-9009





White



Satin Chrome

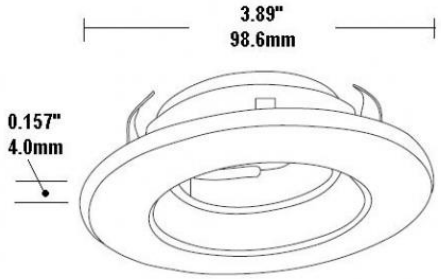

TR1410

3" Deep Regressed Gimbal Trim (TR1410)

Product codes

TR1410WH-WH : WHITE - WHITE

TR1410SC-SAA : S.C. Trim + Satin Alum. Baffle

3.00" Directional trim , with bulb regressed for installation in insulated or non-insulated ceilings

For use with a GU10 style bulb in either a halogen or LED type.

Features glare control capabilities with the use of inside Baffle.

Housing sold separately

HOUSINGS FOR THIS PRODUCT

NC300-GZ, R300-GZ

Technical information

Diameter	3.89" (98.8 mm)
Bulb	GU10 Led / Del, 7W
Bulb	GU10 - 50W

Tel. : 514 695-8228 1 855 739-8228
Fax : 514 695-9009 1 855 812-9009




White-White

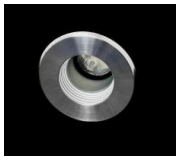
Sat. Chrome - Sat. Alum.


Satin Chrome - Black

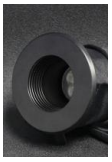
Black - Black

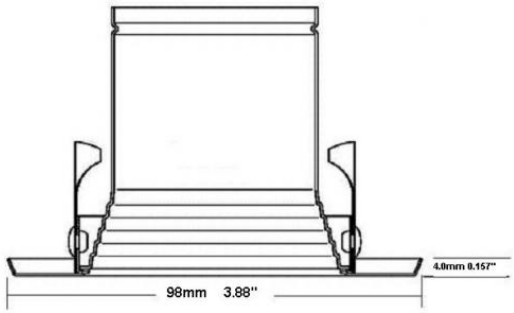

TR1485

3" LED TRIM - Premium Series (TR1485)

Product codes

TR1485SC-BLK : SATIN CHROME TRIM - Black Baffle

TR1485WH-WH : WHITE TRIM - White Baffle

TR1485SC-SAA : SATIN CHROME TRIM - Satin Alum. Baffle

TR1485BLK-BLK : BLACK - Black Baffle

3" downlight LED trim. To be used with the R300-L35 housing exclusively.

Available in 4 finishes.

This decorative trim offers a 15 degree angle of illumination, ideal for spot type applications.

Housing sold seperately

HOUSINGS FOR THIS PRODUCT

R300-L35

Technical information

Beam Spread	15°
Diameter	3.88" (98.6 mm)

Tel. : 514 695-8228 1 855 739-8228
Fax : 514 695-9009 1 855 812-9009



TR1424

3" GU10 GIMBAL TRIM (TR1424)

Product codes

TR1424-ORB : OIL RUBBED BRONZE
TR1424-WH : WHITE
TR1424-CH : CHROME
TR1424-SC : SATIN CHROME
TR1424-AB : ANTIQUE BRASS

3" Directional trim for installation in insulated or non-insulated ceilings.

For use with a GU10 style bulb, in either a halogen or LED type.

Housing sold separately



White Satin Chrome Chrome



Antique Brass Oil Rubbed Bronze

HOUSINGS FOR THIS PRODUCT

NC300-GZ, R300-GZ

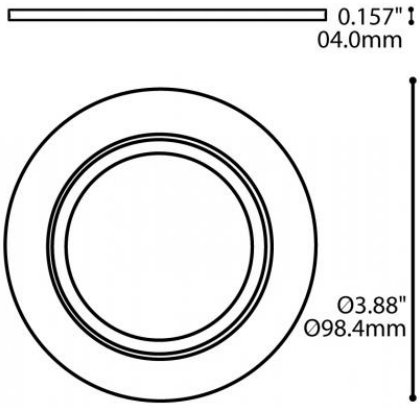

Technical information

Diameter	3.88" (98.6 mm)
Bulb	GU10 Led/Del, 7W
Bulb	GU10, 50W

Tel. : 514 695-8228 1 855 739-8228
Fax : 514 695-9009 1 855 812-9009





White Satin Chrome

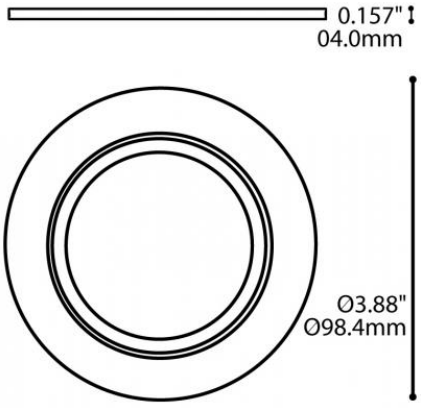

TR1430

3" GU10 DIE CAST TRIM (TR1430)

Product codes

TR1430-WH : WHITE

TR1430-SC : SATIN CHROME

3" Die-Cast trim for installation in insulated or non-insulated ceiling.

For use with a GU10 style bulb, in either a halogen or LED type.

Housing sold separately

HOUSINGS FOR THIS PRODUCT

NC300-GZ, R300-GZ

Technical information

Diameter	3.88" (98.6 mm)
Bulb	GU10 Led / Del, 7W
Bulb	GU10, 50W

Tel. : 514 695-8228 1 855 739-8228
Fax : 514 695-9009 1 855 812-9009





WHITE



Satin Chrome

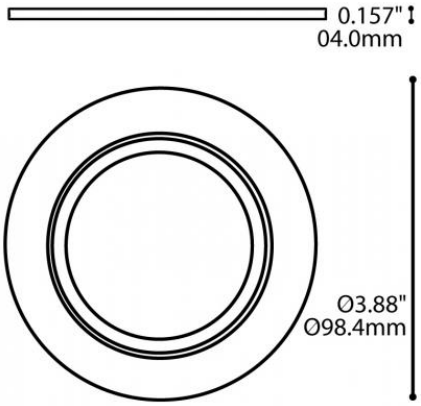

TR1440

3" DIE CAST REGRESSED GIMBAL TRIM (TR1440)

Product codes

TR1440-WH : WHITE

TR1440-SC : SATIN CHROME

3" Die-Cast trim for installation in insulated or non-insulated ceiling.

For use with a GU10 style bulb, in either a halogen or LED type.

Housing sold separately

HOUSINGS FOR THIS PRODUCT

NC300-GZ, R300-GZ

Technical information

Diameter	3.88" (98.6 mm)
Bulb	GU10 - 50W
Bulb	GU10 Led / Del, 7W

Tel. : 514 695-8228 1 855 739-8228
Fax : 514 695-9009 1 855 812-9009



TR1475

3" DIE CAST SQUARE TRIM (TR1475)

Product codes

TR1475-WH : WHITE

TR1475-SC : SATIN CHROME

3.00" die cast square directional trim for installation in insulated or non-insulated ceiling.

For use with a GU10 style bulb in either a halogen or LED format.

Housing sold separately

HOUSINGS FOR THIS PRODUCT

NC300-GZ, R300-GZ



White Satin Chrome

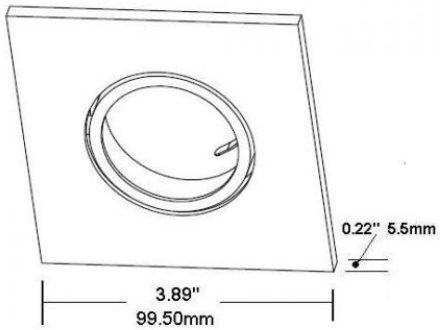

Technical information

Diameter	3.89" (98.8 mm)
Bulb	GU10 - 50W
Bulb	GU10 Led / Del, 7W

Tel. : 514 695-8228 1 855 739-8228
Fax : 514 695-9009 1 855 812-9009



TR1785

4.25" LED STEP BAFFLE TRIM -(TR1785)

Product codes

TR1785WH-WH : WHITE TRIM - White Step Baffle

4.25" Step baffle downlight LED trim. To be used with the R425-L35 housing exclusively.

This decorative trim offers a 58 degree angle of illumination, ideal for flood type applications.

Housing sold seperately.

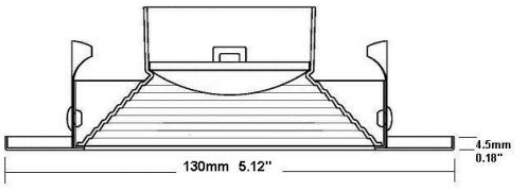

Technical information

Beam Spread	58°
Diameter	5.12" (130.0 mm)

Tel. : 514 695-8228 1 855 739-8228
Fax : 514 695-9009 1 855 812-9009



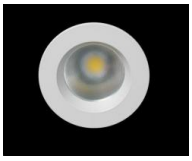

White - White

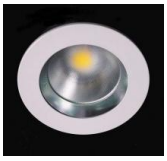

White - Chrome

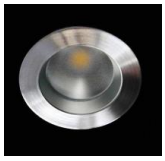

Sat. Chrome - Sat. Alum.

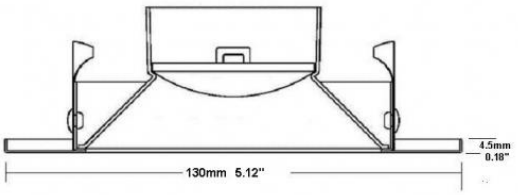

TR1790

4.25" LED FIXED REGRESSED TRIM (TR1790)

Product codes

TR1790WH-WH : WHITE TRIM - White Baffle
TR1790WH-CH : WHITE TRIM - Chrome Baffle
TR1790SC-SAA : SATIN CHROME TRIM - Satin Alum. Baffle

4.25" downlight LED trim. To be used with the R425-L35 housing exclusively.

Available in 3 finishes.

This decorative trim offers a 32 degree angle of illumination, ideal for flood type applications.

Housing sold seperately

Technical information

Beam Spread	32°
Diameter	5.12" (130.0 mm)

Tel. : 514 695-8228 1 855 739-8228
Fax : 514 695-9009 1 855 812-9009





White



White (Satin Chrome)



Satin Chrome (Aluminum)



Satin Chrome (Black)

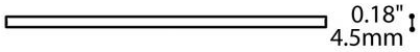

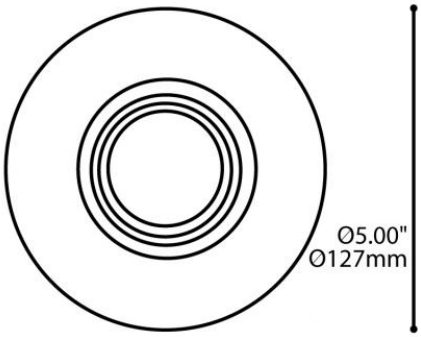

TR1510

4.25" GU10/MR16 REGRESSED TRIM (TR1510)

Product codes

TR1510-WH-WH : White Trim + White Baffle
TR1510-SC-BLK : S.C. Trim + Black Baffle
TR1510-SC-SAA : S.C. Trim + Satin Alum. Baffle
TR1510WH-CHR : White Trim + Chrome Baffle

4.25" Directional trim , with bulb regressed 1.00" (25.4mm), for installation in insulated or non-insulated ceilings

For use with a GU10, MR16 or PAR16 style bulb, in either a halogen or LED type.

Features glare control capabilities with the use of inside Baffle.

Housing sold separately

HOUSINGS FOR THIS PRODUCT

IC425-GZ, IC425-MED, IC425-MR, K150H-42-GZ, K150H-42-MED, K152H-42-MR, K155H-42-MED, NC425-55MED, NC425-GZ, NC425-MED, NC425-MR, R425-55MED, R425-GZ, R425-MED, R425-MR

Technical information

Diameter	5" (127.0 mm)
Adjustment angle	35°
Bulb	MR16-GU10, 50W
Bulb	MRE26, 50W
Bulb	GU10 Led/Del 7W
Bulb	MR16 Led/Del 7W
Bulb	MRE26 Led/Del 7W

Tel. : 514 695-8228 1 855 739-8228
Fax : 514 695-9009 1 855 812-9009





WHITE - WHITE



S.C. + SATIN ALUM



WHITE - CHROME



WHITE - BLK ALZAC

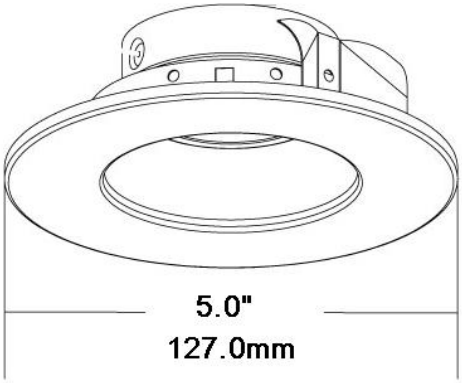

TR1515

4.25" GU10/MR16 DEEP REGRESSED TRIM (TR1515)

Product codes

TR1515-WH-WH : WHITE - WHITE
TR1515-WH-CHR : WHITE - CHROME
TR1515-SC-SAA : S.C. + SATIN ALUM
TR1515-WH-BLKAZ : WHITE - BLK ALZAC

4.25" DEEP directional trim, with bulb regressed 1.50" (38.1mm), for installation in insulated or non-insulated ceilings

For use with a GU10, MR16 or PAR16 style bulb, in either a halogen or LED format.

Features glare control capabilities with the use of inside Baffle.

Housing sold separately

HOUSINGS FOR THIS PRODUCT

IC425-GZ, IC425-MED, IC425-MR, K150H-42-GZ, K152H-42-MR, K155H-42-MED, NC425-55MED, NC425-GZ, NC425-MR, R425-55MED, R425-GZ, R425-MR

Technical information

Diameter	5.0" (127.0 mm)
Adjustment angle	35°
Bulb	MR16 -GU10, 50W
Bulb	MRE26, 50W
Bulb	GU10 Led/Del 7W
Bulb	MR16 Led/Del 7W
Bulb	MRE26 Led/Del 7W

Tel. : 514 695-8228 1 855 739-8228
Fax : 514 695-9009 1 855 812-9009





White



Satin Chrome



Antique Brass



Oil Rubbed Bronze



Black

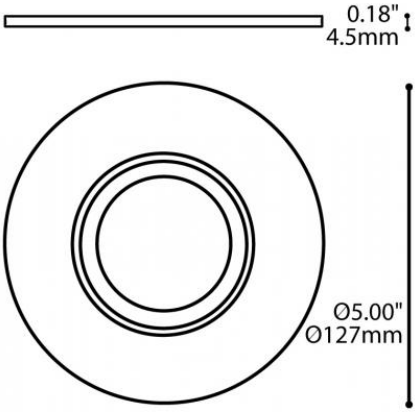

TR1530

4.25" GU10/MR16 GIMBAL TRIM (TR1530)

Product codes

TR1530-AB : ANTIQUE BRASS
TR1530-WH : WHITE
TR1530-BK : BLACK
TR1530-ORB : OIL RUBBED BRONZE
TR1530-SC : SATIN CHROME

4.25" Directional trim for installation in insulated or non-insulated ceiling.

For use with a GU10, MR16 or PAR16 style bulb, in either a halogen or LED format.

Housing sold separately

HOUSINGS FOR THIS PRODUCT

IC425-GZ, IC425-MED, IC425-MR, K150H-42-GZ, K150H-42-MED, K152H-42-MR, K155H-42-MED, NC425-55MED, NC425-GZ, NC425-MED, NC425-MR, R425-55MED, R425-GZ, R425-MED, R425-MR

Technical information

Diameter	5" (127.0 mm)
Adjustment angle	35°
Bulb	MR16-GU10, 50W
Bulb	MRE26, 50W
Bulb	MR16 Led/Del 7W
Bulb	GU10 Led/Del 7W
Bulb	MRE26 Led/Del 7W

Tel. : 514 695-8228 1 855 739-8228
Fax : 514 695-9009 1 855 812-9009





White Satin Chrome

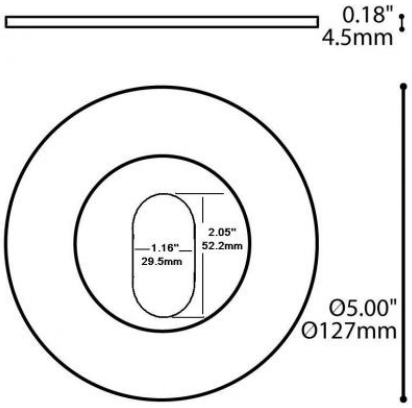

TR1565

4.25'' SLOT APERTURE TRIM (TR1565)

Product codes

TR1565-WH : WHITE

TR1565-SC : SATIN CHROME

4.25" slotted aperture directional trim for installation in insulated or non-insulated ceiling.

For use with a GU10, MR16 ou PAR16 style bulb, in either a halogen or LED format.

Housing sold separately

HOUSINGS FOR THIS PRODUCT

IC425-GZ, IC425-MED, IC425-MR, K150H-42-GZ, K150H-42-MED, K152H-42-MR, K155H-42-MED, NC425-55MED, NC425-GZ, NC425-MED, NC425-MR, R425-55MED, R425-GZ, R425-MED, R425-MR

Technical information

Diameter	5" (127.0 mm)
Adjustment angle	35°
Bulb	MR16-GU10, 50W
Bulb	MRE26, 50W
Bulb	GU10 Led/Del, 7W
Bulb	MR16 Led/Del, 7W
Bulb	MRE26 Led/Del 7W

Tel. : 514 695-8228 1 855 739-8228
Fax : 514 695-9009 1 855 812-9009





White Satin Chrome

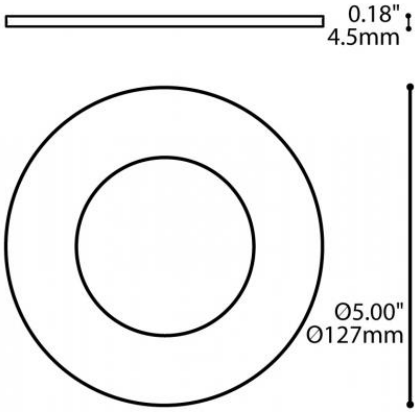

TR1615

4.25" GU10/MR16 SHOWER TRIM (TR1615)

Product codes

TR1615-SC : SATIN CHROME
TR1615-WH : WHITE

4.25" Directional shower trim for installation in insulated or non-insulated ceiling.

For use with a GU10, MR16 or PAR16 style bulb, in either a halogen or LED format.

Certified for damp locations such as showers

Features frosted glass with a clear center

Maximum of a 35W halogen bulb in an insulated ceiling application

Housing sold separately

HOUSINGS FOR THIS PRODUCT

IC425-GZ, IC425-MED, IC425-MR, K150H-42-GZ, K150H-42-MED, K152H-42-MR, K155H-42-MED, NC425-55MED, NC425-GZ, NC425-MED, NC425-MR, R425-55MED, R425-GZ, R425-MED, R425-MR

Technical information

Diameter	5" (127.0 mm)
Adjustment angle	35°
Bulb	MR16 - GU10, 35W
Bulb	MRE26, 50W
Bulb	MRE26, 50W
Bulb	MR16 Led/Del 7W
Bulb	GU10 Led/Del 7W
Bulb	MRE26 Led/Del 7W

Tel. : 514 695-8228 1 855 739-8228
Fax : 514 695-9009 1 855 812-9009





White Satin Chrome

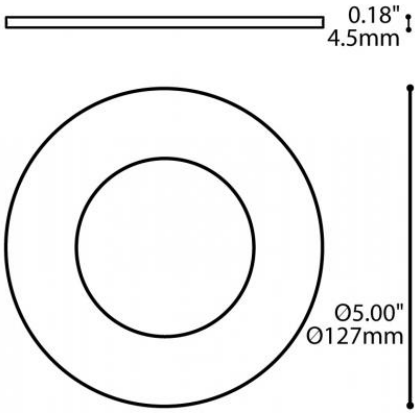

TR1625

4.25" GU10/MR16 SHOWER TRIM (TR1625)

Product codes

TR1625-WH : WHITE

TR1625-SC : SATIN CHROME

4.25" Directional shower trim for installation in insulated or non-insulated ceiling.

For use with a GU10, MR16 or PAR16 style bulb, in either a halogen or LED format.

Certified for damp locations such as showers

Features frosted glass

Maximum of a 35W halogen bulb in an insulated ceiling application

Housing sold separately

HOUSINGS FOR THIS PRODUCT

IC425-GZ, IC425-MED, IC425-MR, K150H-42-GZ, K150H-42-MED, K152H-42-MR, K155H-42-MED, NC425-55MED, NC425-GZ, NC425-MED, NC425-MED, NC425-MR, R425-55MED, R425-GZ, R425-MED, R425-MR

Technical information

Diameter	5" (127.0 mm)
Adjustment angle	35°
Bulb	MR16 - GU10, 35W
Bulb	MRE26, 50W
Bulb	MR16 Led/Del 7W
Bulb	GU10 Led/Del 7W
Bulb	MRE26 Led/Del 7W

Tel. : 514 695-8228 1 855 739-8228
Fax : 514 695-9009 1 855 812-9009





White Satin Chrome

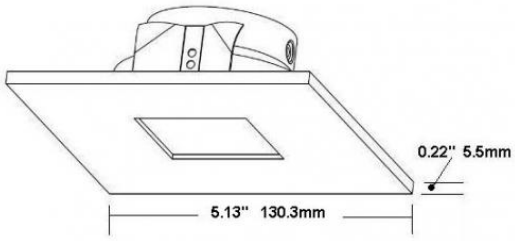

TR1575

4.25" GU10/MR16 SQUARE GIMBAL TRIM (TR1575)

Product codes

TR1575-WH : WHITE

TR1575-SC : SATIN CHROME

4.25" Square directional trim for installation in insulated or non-insulated ceiling.

For use with a GU10, MR16 ou PAR16 style bulb, in either a halogen or LED format.

Housing sold separately

HOUSINGS FOR THIS PRODUCT

IC425-GZ, IC425-MED, IC425-MED, IC425-MR, K150H-42-GZ, K150H-42-MED, K152H-42-MR, K155H-42-MED, NC425-55MED, NC425-GZ, NC425-MED, NC425-MR, R425-55MED, R425-GZ, R425-MED, R425-MR

Technical information

Diameter	5.13" (130.3 mm)
Adjustment angle	35°
Bulb	MR16-GU10, 50W
Bulb	MRE26, 50W
Bulb	MR16 Led/Del 7W
Bulb	GU10 Led/Del 7W
Bulb	MRE26 Led/Del 7W

Tel. : 514 695-8228 1 855 739-8228
Fax : 514 695-9009 1 855 812-9009



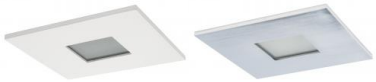

White Satin Chrome

TR1675

4.25" GU10/MR16 SQUARE SHOWER TRIM (TR1675)

Product codes

TR1675-WH : WHITE

TR1675-SC : SATIN CHROME

4.25" Square directional shower trim for installation in insulated or non-insulated ceiling.

For use with a GU10, MR16 or PAR16 style bulb, in either a halogen or LED format.

Certified for damp locations such as showers

Features frosted glass

Maximum of a 35W bulb in an insulated ceiling application

Housing sold separately

HOUSINGS FOR THIS PRODUCT

IC425-GZ, IC425-MED, IC425-MR, K150H-42-GZ, K150H-42-MED, K152H-42-MR, K155H-42-MED, NC425-55MED, NC425-GZ, NC425-MED, NC425-MR, R425-55MED, R425-GZ, R425-MED, R425-MR

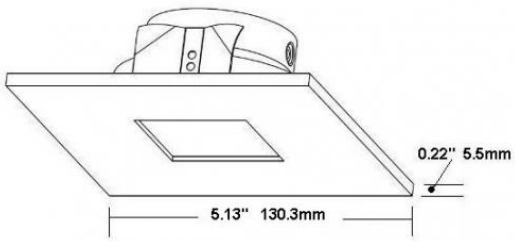

Technical information

Diameter	5.13" (130.3 mm)
Adjustment angle	35°
Bulb	MR16 - GU10, 35W
Bulb	MRE26, 50W
Bulb	MR16 Led/Del 7W
Bulb	GU10 Led/Del 7W
Bulb	MRE26 Led/Del 7W

Tel. : 514 695-8228 1 855 739-8228
Fax : 514 695-9009 1 855 812-9009





White Satin Chrome

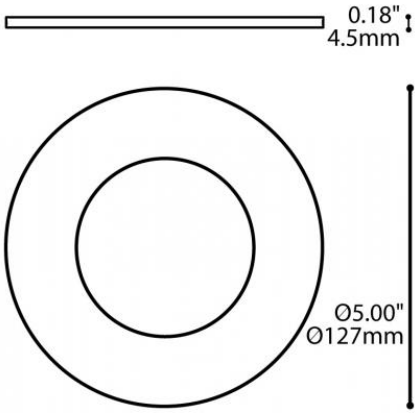

TR1320

4.25" PAR20 FIXED TRIM (TR1320)

Product codes

TR1320-WH : WHITE

TR1320-SC : SATIN CHROME

4.25" Downlight trim for installation in insulated or non-insulated ceilings.

For use with a PAR20 style bulb, in either a halogen or LED format.

Housing sold separately

HOUSINGS FOR THIS PRODUCT

IC425-MED, K150H-42-MED, K155H-42-MED, NC425-55MED, NC425-MED, R425-55MED, R425-MED

Technical information

Diameter	5" (127.0 mm)
Bulb	PAR20, 50W
Bulb	PAR20 Led/Del 8W

Tel. : 514 695-8228 1 855 739-8228
Fax : 514 695-9009 1 855 812-9009





White Satin Chrome

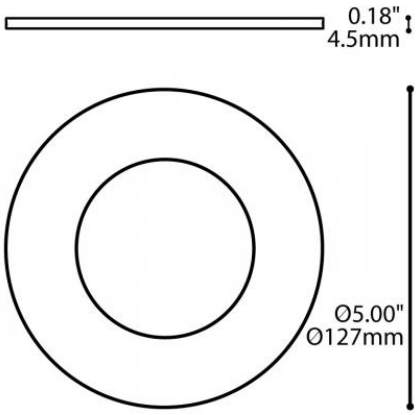

TR1325

4.25" PAR20 SHOWER TRIM (TR1325)

Product codes

TR1325-SC-FRO : SATIN CHROME
TR1325-WH-FRO : WHITE

4.25" Shower trim for installation in insulated or non-insulated ceiling.

For use with a PAR20 style bulb, in either a halogen or LED format.

Certified for damp locations such as showers

Maximum of a 35W halogen bulb in an insulated ceiling application

Features Frosted Glass

Housing sold separately

HOUSINGS FOR THIS PRODUCT

IC425-MED, K150H-42-MED, K155H-42-MED, NC425-55MED, NC425-MED, R425-55MED, R425-MED

Technical information

Diameter	5" (127.0 mm)
Bulb	PAR20, 35W
Bulb	PAR20 Led/Del 8W

Tel. : 514 695-8228 1 855 739-8228
Fax : 514 695-9009 1 855 812-9009





White



Satin Chrome



Antique Brass



Oil Rubbed Bronze



Black

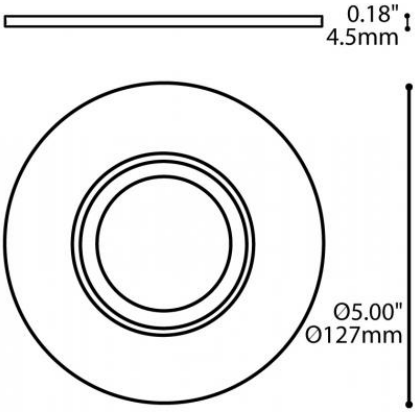

TR1350

4.25" PAR20 GIMBAL TRIM (TR1350)

Product codes

TR1350-SC : SATIN CHROME
TR1350-ORB : OIL RUBBED BRONZE
TR1350-AB : ANTIQUE BRASS
TR1350-WH : WHITE
TR1350-BLK : BLACK

4.25" Directional trim for installation in insulated or non-insulated ceilings

For use with a PAR20 style bulb, in either a halogen or LED format.

Housing sold separately

HOUSINGS FOR THIS PRODUCT

IC425-MED, K150H-42-MED, K155H-42-MED, NC425-55MED, NC425-MED, R425-55MED, R425-MED

Technical information

Diameter	5" (127.0 mm)
Adjustment angle	30°
Bulb	PAR20, 50W
Bulb	PAR20 Led/Del 8W

Tel. : 514 695-8228 1 855 739-8228
Fax : 514 695-9009 1 855 812-9009





White



White (Black)



Satin Chrome (Aluminum)



WHITE - CHROME

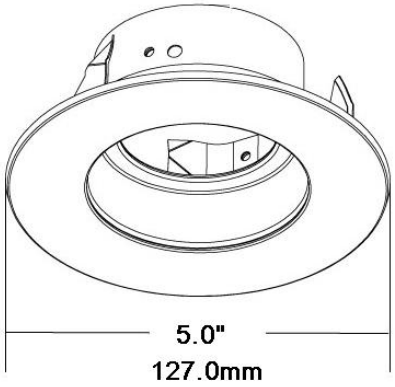

TR1310

4.25" DEEP PAR20 REGRESSED GIMBAL TRIM (TR1310)

Product codes

TR1310WH-WH : WHITE - WHITE
TR1310WH-CHR : WHITE - CHROME
TR1310SC-SAA : S.C. + SATIN ALUM
TR1310WH-BLKAZ : WHITE - BLK ALZAC

4.25" Deep gimbal PAR20 trim, with bulb regressed 1.00" (25.4mm) for installation in insulated or non-insulated ceilings

For use with a PAR20 style bulb, in either a halogen or LED format.

Features glare control capabilities with the use of inside baffle.

Housing sold separately

HOUSINGS FOR THIS PRODUCT

IC425-MED, K155H-42-MED, NC425-55MED, R425-55MED

Technical information

Diameter	5.0" (127.0 mm)
Adjustment angle	30°
Bulb	PAR20, 50W
Bulb	PAR20 Led/Del 8W

Tel. : 514 695-8228 1 855 739-8228
Fax : 514 695-9009 1 855 812-9009





White | Satin Chrome (Aluminum) | Satin Chrome (Black)

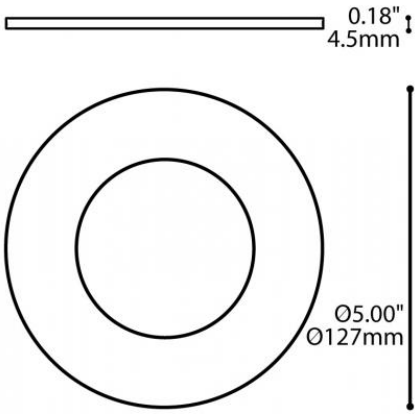

TR1390

4.25" PAR20 FIXED REGRESSED TRIM (TR1390)

Product codes

TR1390-SC-SAA : S.C. Trim + Satin Alum. Baffle
TR1390-SC-BLK : S.C.Trim + Black Baffle
TR1390-WH-WH : White Trim + White Baffle

4.25" PAR20 trim, with bulb regressed 0.50" (12.7mm) for installation in insulated or non-insulated ceilings

For use with a PAR20 style bulb, in either a halogen or LED format.

Features glare control capabilities with the use of inside baffle.

Housing sold separately

HOUSINGS FOR THIS PRODUCT

IC425-MED, K150H-42-MED, K155H-42-MED, NC425-55MED, NC425-MED, R425-55MED, R425-MED

Technical information

Diameter	5" (127.0 mm)
Bulb	PAR20, 50W
Bulb	PAR20 Led/Del 8W

Tel. : 514 695-8228 1 855 739-8228
Fax : 514 695-9009 1 855 812-9009





White



White-Chrom
e

TR1360

4.25" REFLECTOR TRIM R20/PAR20 (TR1360)

Product codes

TR1360-WH-WH : WHITE - WHITE
TR1360-WH-CHR : WHITE - CHROME

4.25" reflector style trim, for use exclusively for the ICR425-MED housing.

Available in 2 finishes, White with White baffle and White with Chrome Baffle.

Option of installing either an R20 or PAR20 bulb, Halogen or LED.

Bulb Options:

Insulated Application:
R20 - Max. 30W
PAR20 - Max. 35W

Non-Insulated Application:
R20 - Max. 50W
PAR20 - Max. 50W

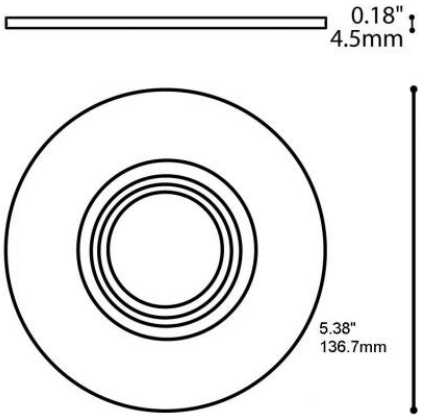

HOUSINGS FOR THIS PRODUCT

ICR425-MED

Technical information

Diameter	5.38" (136.7 mm)
Bulb	R20 - PAR20
Bulb	PAR20 Led/Del 8W

Tel. : 514 695-8228 1 855 739-8228
Fax : 514 695-9009 1 855 812-9009





White | White (Satin Chrome) | White (Black)



Black

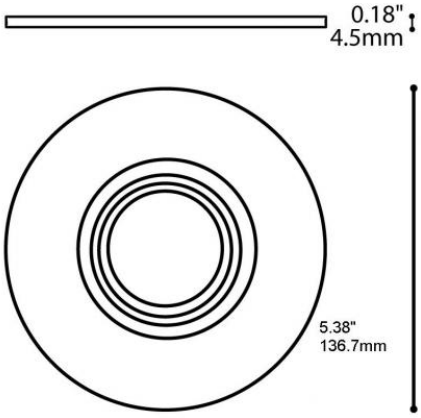

BA20

4.25'' STEP BAFFLE TRIM R20/PAR20 (BA20)

Product codes

BA20WH-WH : WHITE - WHITE
BA20WH-CHR : WHITE - CHROME
BA20WH-BLK : WHITE - BLACK
BA20BLK-BLK : BLACK - BLACK

This 4.25'' step baffle style trim, offers a high quality for the budget minded projects.

For use with a PAR20 or R20 style bulb, in either a halogen or LED format.

Available in 4 finishes.

HOUSINGS FOR THIS PRODUCT

IC425-MED, K155H-42-MED, NC425-55MED, R425-55MED

Technical information

Diameter	5.38" (136.7 mm)
Bulb	R20/PAR20, 50W
Bulb	PAR20 Led/Del 8W

Tel. : 514 695-8228 1 855 739-8228
Fax : 514 695-9009 1 855 812-9009





White Black

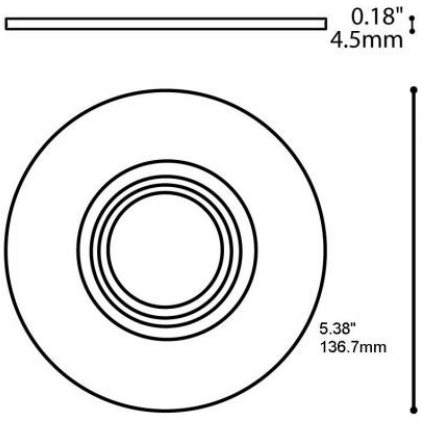

BA20-OTDAL

4.25" STEP BAFFLE TRIM - MARINE GRADE

Product codes

BA20-OTDAL-WH-WH : WHITE - WHITE
BA20-OTDAL-BLK-BLK : BLACK - BLACK

This 4.25" MARINE GRADE step baffle style trim offers a high quality option suitable for any outdoor environment.

The trim is highly resistant to humidity and salt water environments due to its unique construction. It is 100% aluminium, it has a special primer application and finally the finish coat. These 3 components will ensure a lasting product in a harsh environment.

For use with a PAR20 or R20 style bulb, in either a halogen or LED format.

Available in 2 finishes.

HOUSINGS FOR THIS PRODUCT

IC425-MED, K155H-42-MED, NC425-55MED, R425-55MED

Technical information

Diameter	5.38" (136.7 mm)
Bulb	R20/PAR20, 50W
Bulb	PAR20Led/Del,8W

Tel. : 514 695-8228 1 855 739-8228
Fax : 514 695-9009 1 855 812-9009





WHITE



Satin Chrome

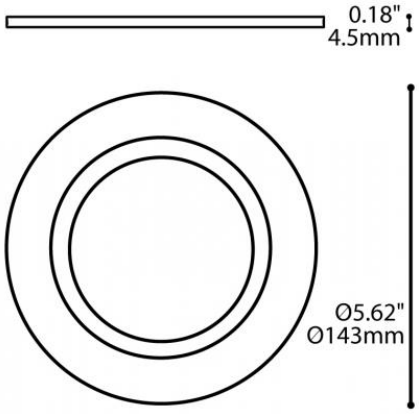

TR1950

4.5" PAR30 GIMBAL TRIM (TR1950)

Product codes

TR1950-SC : SATIN CHROME

TR1950-WH : WHITE

4.5" Directional trim for installation in insulated or non-insulated ceilings.

For use with a PAR30 style bulb in either a halogen or LED format.

Housing sold separately

HOUSINGS FOR THIS PRODUCT

IC450-MED, K150H-45-MED, NC450-MED, R450-MED

Technical information

Diameter	5.62" (142.7 mm)
Adjustment angle	30°
Bulb	PAR30 SN, 75W
Bulb	PAR30 SN, LED 13W
Bulb	PAR30 SN, LED 13W

Tel. : 514 695-8228 1 855 739-8228
Fax : 514 695-9009 1 855 812-9009





White



White (Satin Chrome)

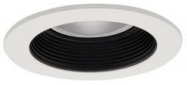

White (Black)



Oil Rubbed Bronze (Black)



Black

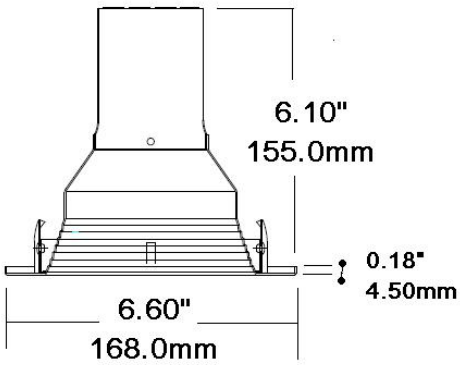

BA50

5" STEP BAFFLE TRIM PAR30/BR30 (BA50)

Product codes

BA50WH-WH : WHITE-WHITE
BA50WH-CHR : WHITE-CHROME
BA50WH-BLK : WHITE-BLACK
BA50BLK-BLK : BLACK-BLACK
BA50ORB-BLK : OIL RUBBED BRONZE-BLACK

This 5.00" step baffle style trim, may be installed into an insulated or non-insulated ceiling.

Ideal with a PAR30 or BR30 style bulb, in either a halogen or LED format.

Available in 5 finishes.

HOUSINGS FOR THIS PRODUCT

NC500-MED, R500-MED

Technical information

Diameter	6.60" (167.6 mm)
Bulb (PAR30, 30L / Non-IC)	75W
Bulb (PAR30, 30L / IC)	60W
Bulb (BR30)	65W
Bulb (R20/PAR20)	50W

Tel. : 514 695-8228 1 855 739-8228
Fax : 514 695-9009 1 855 812-9009





White Black

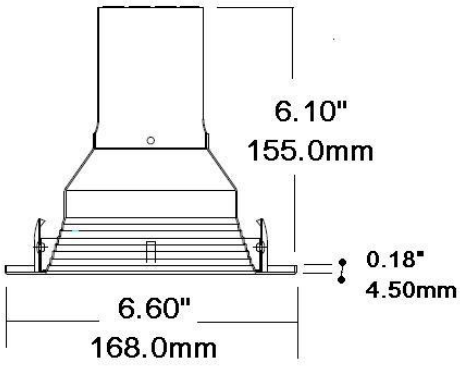

BA50-OTDAL

5" STEP BAFFLE TRIM PAR30/BR30 - MARINE GRADE

Product codes

BA50-OTDAL-WH-WH : WHITE - WHITE
BA50-OTDAL-BLK-BLK : BLACK - BLACK

This 5.00" MARINE GRADE step baffle style trim offers a high quality option suitable for any outdoor environment.

The trim is highly resistant to humidity and salt water environments due to its unique construction. It is 100% aluminium, it has a special primer application and finally the finish coat. These 3 components will ensure a lasting product in a harsh environment.

For use with a PAR30, BR30 or R20/PAR20 style bulb, in either a halogen or LED format.

Available in 2 finishes.

HOUSINGS FOR THIS PRODUCT

NC500-MED, R500-MED

Technical information

Diameter	6.6" (167.6 mm)
Bulb (PAR30,30L)	75W, NON-IC
Bulb (PAR30,30L)	60W, IC
Bulb (BR30)	65W
Bulb (R20 / PAR20)	50W



Tel. : 514 695-8228 1 855 739-8228
Fax : 514 695-9009 1 855 812-9009



TR2050

5.0" PAR30 GIMBAL TRIM (TR2050)

Product codes

TR2050-WH : WHITE

TR2050-SC : SATIN CHROME

This 5.00" trim may be installed into an insulated or non-insulated ceiling.

For use with a PAR30 style bulb, in either a halogen or LED format.

Housing sold separately

HOUSINGS FOR THIS PRODUCT

NC500-MED, R500-MED



White Satin Chrome

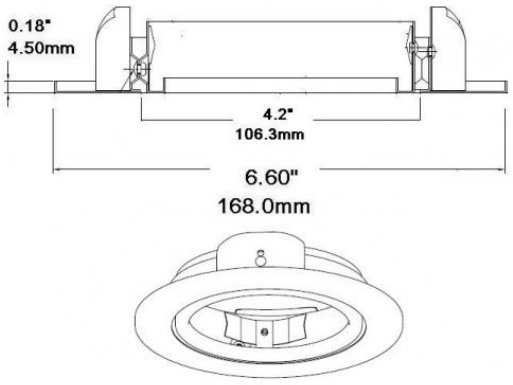

Technical information

Diameter	6.60" (167.6 mm)
Bulb (PAR30 / NON-IC)	75W
Bulb (PAR30 / IC)	60W
Adjustment angle	25°

Tel. : 514 695-8228 1 855 739-8228
Fax : 514 695-9009 1 855 812-9009



TR2040

5" ADJUSTABLE EYEBALL TRIM

PAR30/BR30

Product codes

TR2040-WH : WHITE

This 5.00" adjustable eyeball trim may be used in an installation in insulated or non-insulated ceilings.

For use with a PAR30 or BR30 style bulb, in either a halogen or LED format.

Housing sold separately

HOUSINGS FOR THIS PRODUCT

NC500-MED, R500-MED

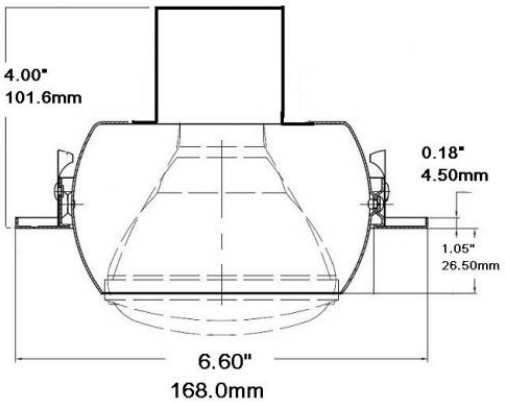

Technical information

Diameter	6.60" (167.6 mm)
Bulb (PAR30, 30L)	75W
Bulb (BR30)	65W
Adjustment angle	25°

Tel. : 514 695-8228 1 855 739-8228
Fax : 514 695-9009 1 855 812-9009





White Satin Chrome

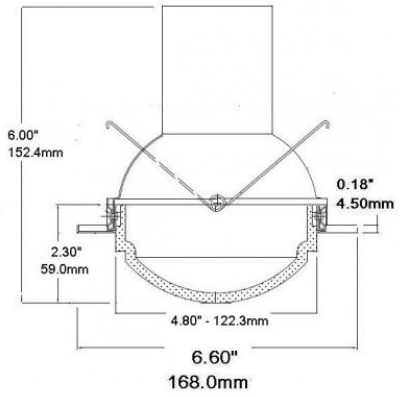

TR2225

5" SHOWER TRIM with DOME FROSTED GLASS

Product codes

TR2225-WH : WHITE

TR2225-SC : SATIN CHROME

This 5.00" shower trim may be installed into an insulated or non-insulated ceiling.

For use with a PAR30, R20/PAR20 or A19 style bulb, in either a halogen or LED format.

Certified for damp locations such as showers

Features a Dome Style Frosted Glass

Housing sold separately

HOUSINGS FOR THIS PRODUCT

NC500-MED, R500-MED

Technical information

Diameter	6.60" (167.6 mm)
Bulb (PAR30)	50W
Bulb (R20/PAR20)	50W

Tel. : 514 695-8228 1 855 739-8228
Fax : 514 695-9009 1 855 812-9009





White Satin Chrome

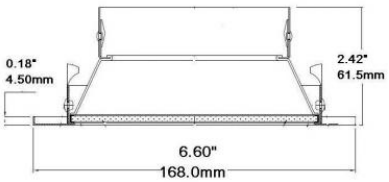

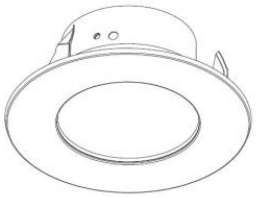

TR2025

5" SHOWER TRIM with FROSTED GLASS

Product codes

TR2025-WH : WHITE

TR2025-SC : SATIN CHROME

This 5.00" shower trim may be installed into an insulated or non-insulated ceiling.

For use with a PAR30 style bulb, in either a halogen or LED format.

Certified for damp locations such as showers

Features FROSTED Glass

Housing sold separately

HOUSINGS FOR THIS PRODUCT

NC500-MED, R500-MED

Technical information

Diameter	6.60" (167.6 mm)
Bulb (PAR30 / IC)	38W
Bulb (PAR30 / NON-IC)	50W

Tel. : 514 695-8228 1 855 739-8228
Fax : 514 695-9009 1 855 812-9009





White Satin Chrome

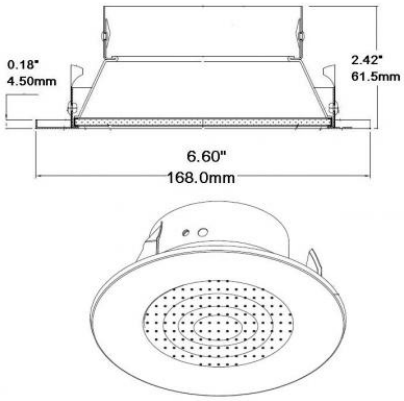

TR2125

5" SHOWER TRIM with FRESNEL GLASS

Product codes

TR2125-WH : WHITE

TR2125-SC : SATIN CHROME

This 5.00" shower trim may be installed into an insulated or non-insulated ceiling.

For use with a PAR30 style bulb, in either a halogen or LED format.

Certified for damp locations such as showers

Features FRESNEL Style Glass

Housing sold separately

HOUSINGS FOR THIS PRODUCT

NC500-MED, R500-MED

Technical information

Diameter	6.60" (167.6 mm)
Bulb (PAR30 / IC)	38W
Bulb (PAR30 / NON-IC)	50W

Tel. : 514 695-8228 1 855 739-8228
Fax : 514 695-9009 1 855 812-9009



R300-L35

3" LED REMODEL HOUSING

This LED housing is constructed of heavy duty galvanized steel, with an aluminum heat sink. It also includes a high performance LED chip, driver, heat sink and fully dimmable.
The mounting system allows a quick, easy and sturdy installation using a 2 clip system. Mounting clips allow for installations in ceilings up to 1.25" (32mm) in thickness, combined with Quick Connect wire connectors, allows for a quick, easy and sturdy installation.
This housing is designed to be installed directly into batt or roll type insulation. However, in a loose-fill or blown type insulation, an NDR vapour barrier (VP99, 90°C rated) or an insulated box (IB410) is recommended. It is also Air-Tight rated when installed with the foil tape included with each unit. This tape is to be installed over the mounting clips after installation.
DIMMER INSTALLATION NOTES:
In order to ensure that the recommended dimmer (see below) functions correctly, it is strongly recommended that a dedicated power line is used from your power distribution panel. The neutral wire (WHITE) should NOT be shared with other loads.

TRIMS FOR THIS PRODUCT

TR1485

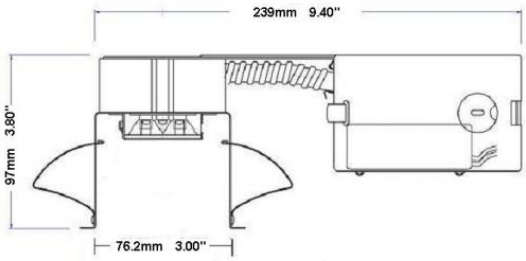

Technical information

Height	3.8" (96.5 mm)
Length	9.4" (238.8 mm)
Cutting hole	3.2" (81.3 mm)
Voltage	120V
Color Temperature	3500k
CRI	80
Light Output - Lumen	300
Output wattage	5W
Recommended Dimmer	Leviton IPL06-LZ
Recommended Dimmer	Leviton 6674
LED Life	40,000
Warranty (Years)	3 Yrs/Ans
Mounting Plate	MP300 - AMP300
Mounting Plate	MPHB-300

Tel. : 514 695-8228 1 855 739-8228
Fax : 514 695-9009 1 855 812-9009



R300-GZ

3" GU10 REMODEL HOUSING - IC / NON-IC

Housings constructed of heavy duty galvanized steel with junction box - Built-in thermal protection

Patented adjustable mounting clips (2) and "Quick Connect" wire connectors, allow for a quick, easy and sturdy installation

For use with a GU10 style bulb, in either a halogen or LED type.

Insulated Ceiling Application; the use of an LED type bulb is required.

Refer to trim model for specific bulb wattages.

Can be installed in ceilings up to 1.25" (32mm) in thickness. New Construction or acoustic tiles

Some municipalities will require the use of a vapor barrier in an insulated application. Verify local building codes prior to installation.

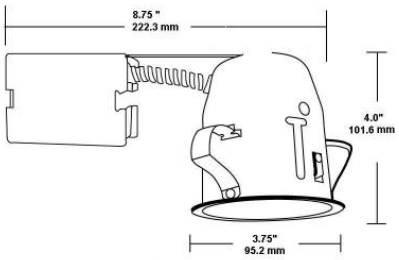

TRIMS FOR THIS PRODUCT

TR1424, TR1430, TR1410, TR1440, TR1475

Technical information

Height	4" (101.6 mm)
Length	8.75" (222.3 mm)
Cutting hole	3.2" (81.3 mm)
Voltage	120V
Mounting Plate	MP300 - AMP300
Mounting Plate	MPHB-300

Tel. : 514 695-8228 1 855 739-8228
Fax : 514 695-9009 1 855 812-9009



NC300-GZ

3" GU10 NEW CONSTRUCTION HOUSING - IC / NON-IC

Housings constructed of heavy duty galvanized steel with junction box, for ceilings with no insulation - Built-in thermal protection

For use with a GU10 style bulb, in either a halogen or LED type.

Insulated Ceiling Application; the use of an LED type bulb is required.

Refer to trim model for specific bulb wattages.

Ideal for open ceilings - New Construction or acoustic tiles

Adjustable mounting bars, included, allow for installation between 13.00" (320mm) and 26.00" (660mm) openings

Can be installed in ceilings up to 1.25" (32mm) in thickness

Some municipalities will require the use of a vapor barrier in an insulated application. Verify local building codes prior to installation.

Important: Recommended installation in accessible ceilings. (ex: suspended ceilings)

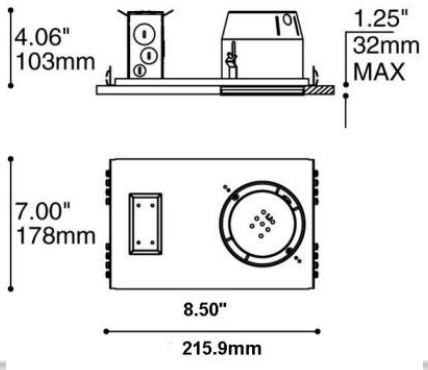

TRIMS FOR THIS PRODUCT

TR1424, TR1430, TR1410, TR1440, TR1475

Technical information

Height	4.06" (103.1 mm)
Width	7" (177.8 mm)
Length	8.5" (215.9 mm)
Cutting hole	3.2" (81.3 mm)
Voltage	120V

Tel. : 514 695-8228 1 855 739-8228
Fax : 514 695-9009 1 855 812-9009



K150H-42-GZ

4.25'' GU10 REMODEL HOUSING - IC / NON-IC

These housings are constructed of heavy-duty steel and a tight assembly so as to avoid noise and vibration. The mounting system allows a quick, easy and sturdy installation, using the automatic positioning feature. - 2 screw system

For use with a GU10 style bulb, in either a halogen or LED type.

Insulated Ceiling Application; the use of an LED type bulb is required.
Refer to trim model for specific bulb wattages.

Mainly used for renovation or ceilings with limited space. Can be installed in ceilings with, up to 1.25'' (32mm) of thickness. New Construction or acoustic tiles.

Approved for damp locations, with built-in thermal protection and "Quick Connect wire connectors included.

Some municipalities will require the use of a vapor barrier in an insulated application. Verify local building codes prior to installation.

TRIMS FOR THIS PRODUCT

TR1625, TR1615, TR1530, TR1510, TR1575, TR1675, TR1515, TR1565

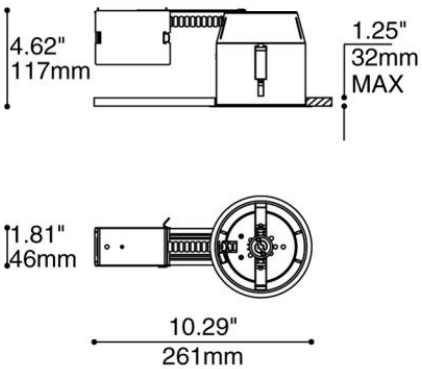

Technical information

Height	4.62" (117.3 mm)
Length	10.29" (261.4 mm)
Cutting hole	4.38" (111.3 mm)
Voltage	120V
Mounting Plate	MP425 - AMP425
Mounting Plate	MPHB-425

Tel. : 514 695-8228 1 855 739-8228
Fax : 514 695-9009 1 855 812-9009



R425-GZ

4.25" GU10 REMODEL HOUSING - IC / NON-IC

Housings constructed of heavy duty galvanized steel with junction box - Built-in thermal protection

For use with a GU10 style bulb, in either a halogen or LED type.

Insulated Ceiling Application; the use of an LED type bulb is required.

Refer to trim model for specific bulb wattages.

Patented adjustable mounting clips (3) and "Quick Connect" wire connectors, allow for a quick, easy and sturdy installation

Can be installed in ceilings up to 1.25" (32mm) in thickness. New Construction or acoustic tiles

Approved for damp locations

Some municipalities will require the use of a vapor barrier in an insulated application. Verify local building codes prior to installation.

TRIMS FOR THIS PRODUCT

TR1625, TR1615, TR1510, TR1530, TR1575, TR1675, TR1515, TR1565

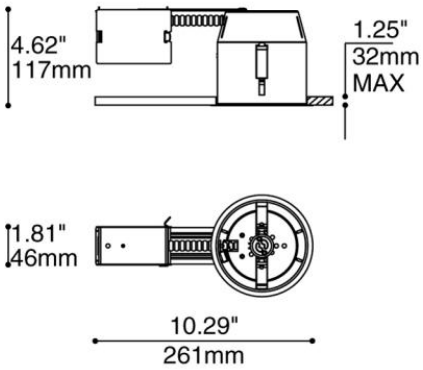

Technical information

Height	4.62" (117.3 mm)
Length	10.29" (261.4 mm)
Cutting hole	4.38" (111.3 mm)
Voltage	120V
Mounting Plate	MP425 - AMP425
Mounting Plate	MPHB-425

Tel. : 514 695-8228 1 855 739-8228
Fax : 514 695-9009 1 855 812-9009



NC425-GZ

4.25" GU10 NEW CONSTRUCTION HOUSING - IC / NON-IC

Housings constructed of heavy duty galvanized steel with junction box - Built-in thermal protection

For use with a GU10 style bulb, in either a halogen or LED type.

Insulated Ceiling Application; the use of an LED type bulb is required.

Refer to trim model for specific bulb wattages.

Ideal for open ceilings - New Construction or acoustic tiles

Adjustable mounting bars included, allows for installation between 13.00" (320mm) and 26.00"(660mm) openings
"Quick Connect" wire connectors included

Can be installed in ceilings up to 1.25" (32mm) in thickness. Approved for damp locations

Some municipalities will require the use of a vapor barrier in an insulated application. Verify local building codes prior to installation.

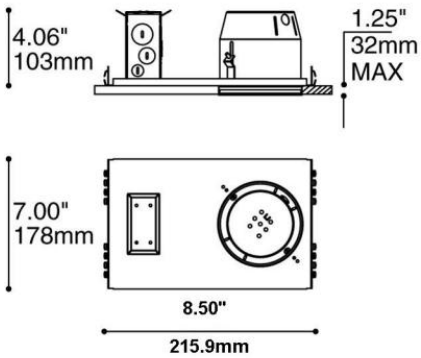

TRIMS FOR THIS PRODUCT

TR1625, TR1615, TR1530, TR1510, TR1575, TR1675, TR1515, TR1565

Technical information

Height	4.06" (103.1 mm)
Width	7" (177.8 mm)
Length	8.5" (215.9 mm)
Cutting hole	4.38" (111.3 mm)
Voltage	120V

Tel. : 514 695-8228 1 855 739-8228
Fax : 514 695-9009 1 855 812-9009



IC425-GZ

4.25" I.C. HOUSING - GU10 AIRTIGHT

These compact housings are built for ceilings with insulation. They may be used in new construction, renovation or acoustic tile applications.

For use with a GU10 style bulb, in either a halogen or LED type. Refer to trim model for specific bulb wattages.

Adjustable mounting bars allow for installation between 14.25" (360mm) to 26.00" (660mm). Can be installed in ceilings up to 2.00" (50mm) thick.

Socket, Quick Connect wire connectors and built-in thermal protection included.

Approved for humid locations, housing completely sealed, stops any air exchange within the ceiling cavity. Although this product is AIR-TIGHT rated, some municipalities will require the use of a vapor barrier (VP99). Verify local building codes prior to installation.

Ideal for high energy efficiency construction.

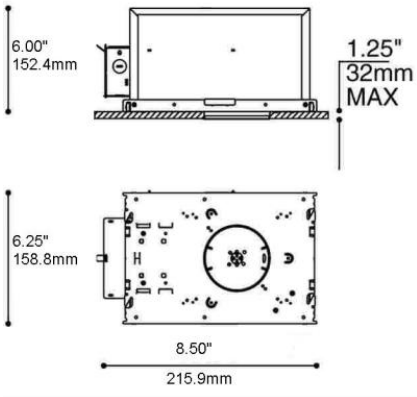

TRIMS FOR THIS PRODUCT

TR1510, TR1530, TR1615, TR1625, TR1575, TR1675, TR1515, TR1565

Technical information

Height	6" (152.4 mm)
Width	6.25" (158.8 mm)
Length	8.5" (215.9 mm)
Cutting hole	4.38" (111.3 mm)
Voltage	120V
AIR TIGHT Approved	ASTM E283 - 04

Tel. : 514 695-8228 1 855 739-8228
Fax : 514 695-9009 1 855 812-9009



K150H-42-MED

4.25" PAR20 REMODEL HOUSING - IC / NON-IC

These housings are constructed of heavy-duty steel and a tight assembly so as to avoid noise and vibration. The mounting system allows a quick, easy and sturdy installation, using the automatic positioning feature. - 2 screw system

Mainly used for renovation or ceilings with limited space.

For use with a PAR20 or MRE26 (PAR16) style bulb, in either a halogen or LED type.

Insulated Ceiling Application; the use of an LED type bulb is required.

Refer to trim model for specific bulb wattages.

Can be installed in ceilings with, up to 1.25" (32mm) of thickness. New Construction or acoustic tiles.

Approved for damp locations, with built-in thermal protection and "Quick Connect wire connectors included

Some municipalities will require the use of a vapor barrier in an insulated application. Verify local building codes prior to installation.

TRIMS FOR THIS PRODUCT

TR1390, TR1350, TR1325, TR1320, TR1510, TR1515, TR1530, TR1615, TR1625, TR1575, TR1675, TR1565

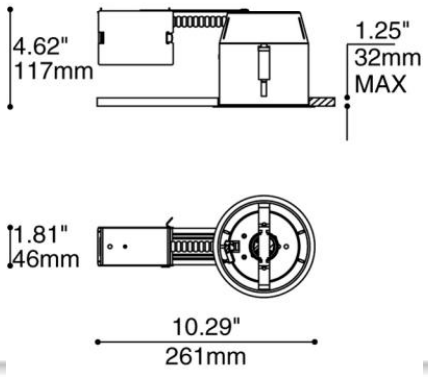

Technical information

Height	4.62" (117.3 mm)
Length	10.29" (261.4 mm)
Cutting hole	4.38" (111.3 mm)
Voltage	120V
Mounting Plate	MP425 - AMP425
Mounting Plate	MPHB-425

Tel. : 514 695-8228 1 855 739-8228
Fax : 514 695-9009 1 855 812-9009



K155H-42-MED

4.25" PAR20 DEEP REMODEL HOUSING - IC / NON-IC

These housings are constructed of heavy-duty steel and a tight assembly so as to avoid noise and vibration. This housing is designed for use with deep series trims - TR1310 and BA20
They may also be used with all other 4.25" NDR series trims, if needed.

For use with a PAR20, R20 or MRE26 (PAR16) style bulb, in either a halogen or LED type.

Insulated Ceiling Application; the use of an LED type bulb is required.
Refer to trim model for specific bulb wattages.

The mounting system allows a quick, easy and sturdy installation, using the automatic positioning feature. - 2 screw system
Can be installed in ceilings with, up to 1.25" (32mm) of thickness. New Construction or acoustic tiles.
Approved for damp locations, with built-in thermal protection and "Quick Connect wire connectors included

Some municipalities will require the use of a vapor barrier in an insulated application. Verify local building codes prior to installation.

TRIMS FOR THIS PRODUCT

TR1310, BA20, TR1320, TR1325, TR1350, TR1390, TR1510, TR1515, TR1530, TR1615, TR1625, TR1575, TR1675, TR1565

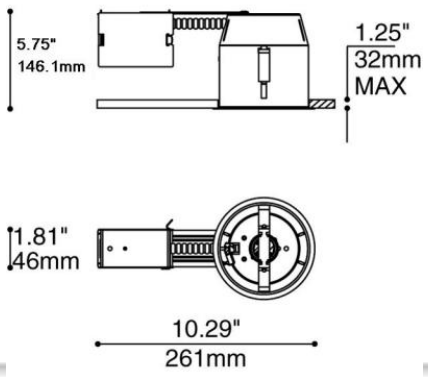

Technical information

Height	5.75" (146.1 mm)
Length	10.29" (261.4 mm)
Cutting hole	4.38" (111.3 mm)
Voltage	120V
Mounting Plate	MP425 - AMP425
Mounting Plate	MPHB-425

Tel. : 514 695-8228 1 855 739-8228
Fax : 514 695-9009 1 855 812-9009



R425-MED

4.25" PAR20 REMODEL HOUSING - IC / NON-IC

Housings constructed of heavy duty galvanized steel with junction box - Built-in thermal protection

For use with a PAR20 or MRE26 (PAR16) style bulb, in either a halogen or LED type.

Insulated Ceiling Application; the use of an LED type bulb is required.

Refer to trim model for specific bulb wattages.

Mainly used for renovation or ceilings with limited space.

Patented adjustable mounting clips (3) and "Quick Connect" wire connectors, allow for a quick, easy and sturdy installation

Can be installed in ceilings up to 1.25" (32mm) in thickness. New Construction or acoustic tiles

Approved for damp locations

Some municipalities will require the use of a vapor barrier in an insulated application. Verify local building codes prior to installation.

TRIMS FOR THIS PRODUCT

TR1350, TR1390, TR1325, TR1320, TR1510, TR1515, TR1530, TR1615, TR1625, TR1575, TR1675, TR1565

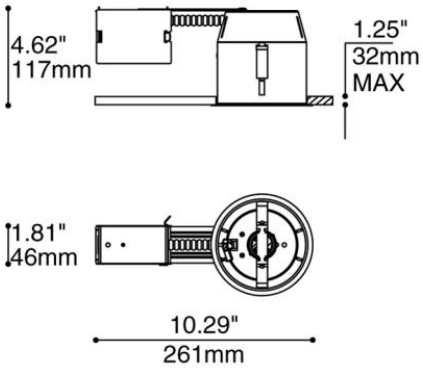

Technical information

Height	4.62" (117.3 mm)
Length	10.29" (261.4 mm)
Cutting hole	4.38" (111.3 mm)
Voltage	120V
Mounting Plate	MP425 - AMP425
Mounting Plate	MPHB-425

Tel. : 514 695-8228 1 855 739-8228
Fax : 514 695-9009 1 855 812-9009



R425-55MED

4.25" PAR20 DEEP REMODEL HOUSING - IC / NON-IC

Housings constructed of heavy duty galvanized steel with junction box - Built-in thermal protection.

Housing is designed for use with deep trims series - TR1310 and BA20 series.
They may also be used with all other 4.25" NDR series trims, if needed.

For use with a PAR20, R20 or MRE26 (PAR16) style bulb, in either a halogen or LED type.

Insulated Ceiling Application; the use of an LED type bulb is required.
Refer to trim model for specific bulb wattages.

Patented adjustable mounting clips (3) and "Quick Connect" wire connectors, allow for a quick, easy and sturdy installation

Can be installed in ceilings up to 1.25" (32mm) in thickness. New Construction or acoustic tiles.
Approved for damp locations

Some municipalities will require the use of a vapor barrier in an insulated application. Verify local building codes prior to installation.

TRIMS FOR THIS PRODUCT

TR1310, BA20, TR1320, TR1325, TR1350, TR1390, TR1510, TR1515, TR1530, TR1615, TR1625, TR1575, TR1675, TR1565

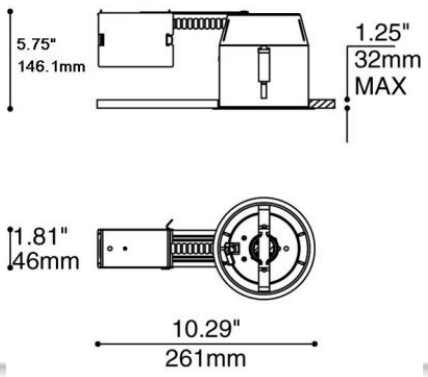

Technical information

Height	5.75" (146.1 mm)
Length	10.29" (261.4 mm)
Cutting hole	4.38" (111.3 mm)
Voltage	120V
Mounting Plate	MP425 - AMP425
Mounting Plate	MPHB-425

Tel. : 514 695-8228 1 855 739-8228
Fax : 514 695-9009 1 855 812-9009



ICR425-MED

4.25" R20/PAR20 INSULATED REMODEL HOUSING

Housings constructed of ALUMINIUM with junction box - Built-in thermal protection
This housing is designed for a retro-fit application, where the ceiling is insulated.
The unit is IC rated, but may be also converted to an AirTight rating as well.

To convert the housing to an AirTight rating after installation, simply cover the mounting clip slots with the strips of metal tape included in the housing.

For use with a PAR20 or R20 style bulb, in either a halogen or LED type.

Patented adjustable mounting clips (3) and "Quick Connect" wire connectors, allow for a quick, easy and sturdy installation.

Insulated Ceiling Application: R20 - Max. 30W or PAR20 - Max. 35W

Can be installed in ceilings up to 1.25" (32mm) in thickness. New Construction or acoustic tiles.

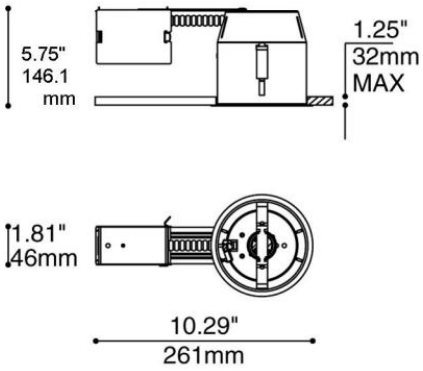

TRIMS FOR THIS PRODUCT

TR1360

Technical information

Height	5.75" (146.1 mm)
Length	10.29" (261.4 mm)
Cutting hole	4.38" (111.3 mm)
Voltage	120V
Bulb	R20 - PAR20
Bulb	PAR20 LED / DEL
Mounting Plate	MP425 - AMP425
Mounting Plate	MPHB-425
AIR TIGHT Approved	ASTM E283 - 04

Tel. : 514 695-8228 1 855 739-8228
Fax : 514 695-9009 1 855 812-9009



NC425-MED

4.25" PAR20 NEW CONSTRUCTION HOUSING - IC / NON-IC

Housing constructed of heavy duty galvanized steel with junction box - Built-in thermal protection

Ideal for open ceilings, new constructions or acoustic tiles

For use with a PAR20 or MRE26 (PAR16) style bulb, in either a halogen or LED type.

Insulated Ceiling Application; the use of an LED type bulb is required.

Refer to trim model for specific bulb wattages.

Adjustable mounting bars included, allows for installation between 13.00" (320mm) and 26.00"(660mm) openings. "Quick Connect" wire connectors included. Can be installed in ceilings up to 1.25" (32mm) in thickness.

Approved for damp locations

Some municipalities will require the use of a vapor barrier in an insulated application. Verify local building codes prior to installation.

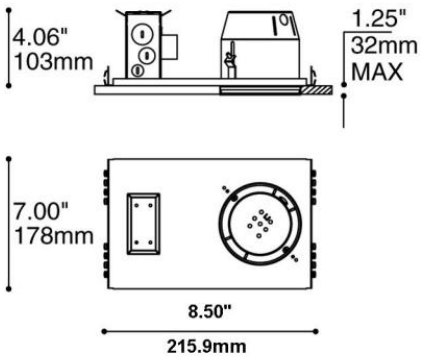

TRIMS FOR THIS PRODUCT

TR1320, TR1325, TR1350, TR1390, TR1510, TR1515, TR1530, TR1615, TR1625, TR1575, TR1675, TR1565

Technical information

Height	4.06" (103.1 mm)
Width	7" (177.8 mm)
Length	8.5" (215.9 mm)
Cutting hole	4.38" (111.3 mm)
Voltage	120V

Tel. : 514 695-8228 1 855 739-8228
Fax : 514 695-9009 1 855 812-9009



NC425-55MED

4.25" PAR20 DEEP NC HOUSING - IC / NON-IC

Housing constructed of heavy duty galvanized steel with junction box - Built-in thermal protection.
This housing is designed for use with deep series trims - TR1310 and BA20
They may also be used with all other 4.25" NDR series trims, if needed.

Ideal for open ceilings, new constructions or acoustic tiles

For use with a PAR20, R20 or MRE26 (PAR16) style bulb, in either a halogen or LED type.

Insulated Ceiling Application; the use of an LED type bulb is required.Refer to trim model for specific bulb wattages

Adjustable mounting bars included, allows for installation between 13.00" (320mm) and 26.00"(660mm) openings. "Quick Connect" wire connectors included. Can be installed in ceilings up to 2.00" (50mm) in thickness. Approved for damp locations

Some municipalities will require the use of a vapor barrier in an insulated application. Verify local building codes prior to installation.

TRIMS FOR THIS PRODUCT

BA20, TR1310, TR1320, TR1325, TR1350, TR1390, TR1515, TR1510, TR1530, TR1615, TR1625, TR1575, TR1675, TR1565

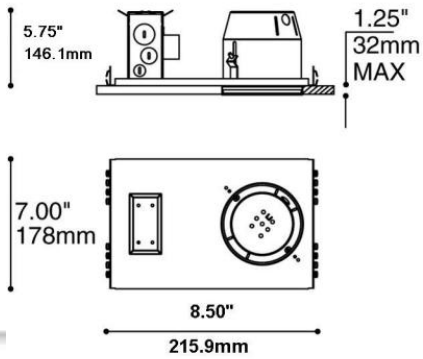

Technical information

Length	8.5" (215.9 mm)
Height	5.75" (146.1 mm)
Width	7.00" (177.8 mm)
Cutting hole	4.38" (111.3 mm)
Voltage	120V

Tel. : 514 695-8228 1 855 739-8228
Fax : 514 695-9009 1 855 812-9009



IC425-MED

4.25" I.C. HOUSING -PAR20 AIRTIGHT

These compact housings are built for ceilings with insulation. They may be used in new construction, remodeling or acoustic tile applications.

Adjustable mounting bars allow for installation between 14.25" (360mm) to 26.00" (660mm). Can be installed in ceilings up to 2.00" (50mm) thick.

For use with a PAR20, R20 or MRE26 (PAR16) style bulb, in either a halogen or LED type. Refer to trim model for specific bulb wattages.

Socket, Quick Connect wire connectors and built-in thermal protection included.

Approved for humid locations, housing completely sealed, stops any air exchange within the ceiling cavity. Although this product is AIR-TIGHT rated, some municipalities will require the use of a vapor barrier (VP99). Verify local building codes prior to installation.

Ideal for high energy efficiency construction.

For a shower applications, a maximum of a 35W bulb may be installed.

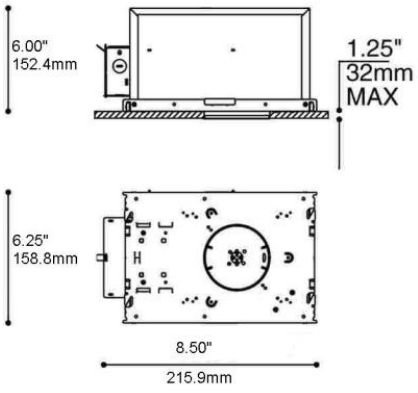

TRIMS FOR THIS PRODUCT

TR1320, TR1325, TR1350, TR1390, TR1310, BA20, TR1510, TR1515, TR1530, TR1615, TR1625, TR1575, TR1675, TR1565

Technical information

Height	6" (152.4 mm)
Width	6.25" (158.8 mm)
Length	8.5" (215.9 mm)
Cutting hole	4.38" (111.3 mm)
Voltage	120V
AIR TIGHT Approved	ASTM E283 - 04

Tel. : 514 695-8228 1 855 739-8228
Fax : 514 695-9009 1 855 812-9009

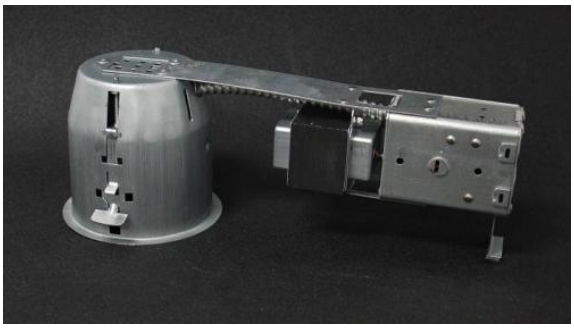

K152H-42-MR

4.25" MR16 REMODEL HOUSING - Premium Series

These housings are constructed of heavy-duty steel and a tight assembly so as to avoid noise and vibration. Housings include junction box and magnetic transformer (120V / 12V).

For use with a MR16 style bulb, in either a halogen or LED type. Refer to trim model for specific bulb wattages.

The mounting system allows a quick, easy and sturdy installation, using the automatic positioning feature. - 2 screw system

Mainly used for renovation or ceilings with limited space, where no insulation is used.

Can be installed in ceilings with, up to 1.25" (32mm) of thickness. New Construction or acoustic tiles.

Approved for damp locations, with built-in thermal protection feature and "Quick Connect" wire connectors.

TRIMS FOR THIS PRODUCT

TR1625, TR1615, TR1530, TR1510, TR1575, TR1675, TR1515, TR1565

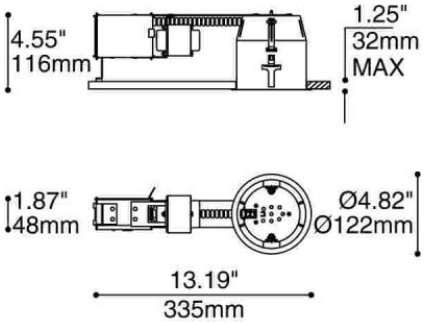

Technical information

Height	4.55" (115.6 mm)
Length	13.19" (335.0 mm)
Cutting hole	4.38" (111.3 mm)
Voltage	12V
Mounting Plate	MP425 - AMP425
Mounting Plate	MPHB-425

Tel. : 514 695-8228 1 855 739-8228
Fax : 514 695-9009 1 855 812-9009



R425-MR

4.25" MR16 REMODEL HOUSING

Housings constructed of heavy duty galvanized steel with junction box and magnetic transformer (120V / 12V)

For use with a MR16 style bulb, in either a halogen or LED type. Refer to trim model for specific bulb wattages.

Patented adjustable mounting clips (3) allow for a quick, easy and sturdy installation

Mainly used for renovation or ceilings with limited space, where no insulation is used.

Socket, "Quick Connect" wire connectors and built-in thermal protection included

Can be installed in ceilings up to 1.25" (32mm) in thickness. New Construction or acoustic tiles

Approved for damp locations

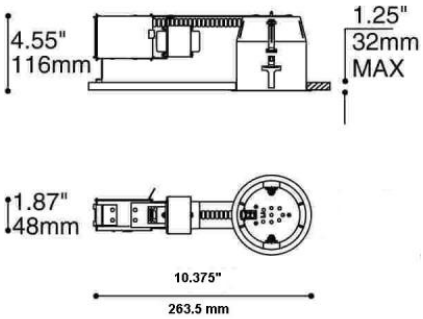

TRIMS FOR THIS PRODUCT

TR1625, TR1510, TR1530, TR1615, TR1575, TR1675, TR1515, TR1565

Technical information

Height	4.55" (115.6 mm)
Length	10.375" (263.5 mm)
Cutting hole	4.38" (111.3 mm)
Voltage	12V
Mounting Plate	MP425 - AMP425
Mounting Plate	MPHB-425

Tel. : 514 695-8228 1 855 739-8228
Fax : 514 695-9009 1 855 812-9009

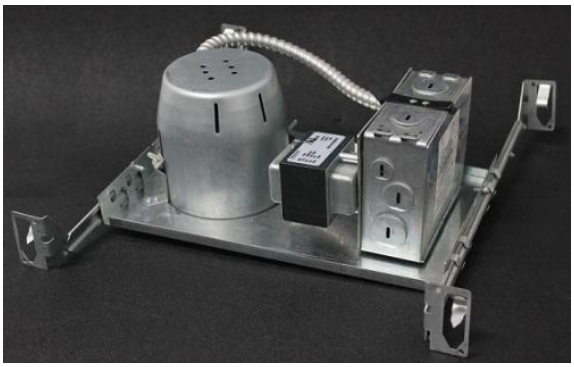

NC425-MR

4.25" MR16 NEW CONSTRUCTION HOUSING

Housings constructed of heavy duty galvanized steel - Built-in thermal protection

For use with a MR16 style bulb, in either a halogen or LED type. Refer to trim model for specific bulb wattages.

Ideal for open ceilings with no insulation - New Construction or acoustic tiles

Adjustable mounting bars included, allows for installation between 13.00" (320mm) and 26.00" (660mm) openings

Can be installed in ceilings up to 1.25" (32mm) in thickness

Magnetic Transformer (120V / 12V) and " Quick Connect" wire connectors included

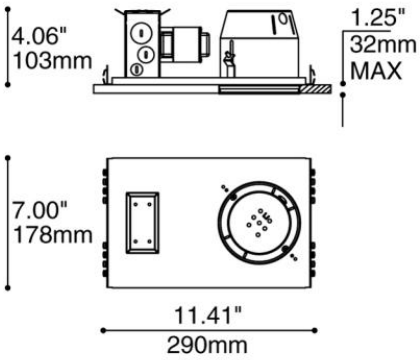

TRIMS FOR THIS PRODUCT

TR1625, TR1615, TR1530, TR1510, TR1575, TR1675, TR1515, TR1565

Technical information

Height	4.06" (103.1 mm)
Width	7" (177.8 mm)
Length	11.41" (289.8 mm)
Cutting hole	4.38" (111.3 mm)
Voltage	12V

Tel. : 514 695-8228 1 855 739-8228
Fax : 514 695-9009 1 855 812-9009



IC425-MR

4.25" I.C. HOUSING - AIRTIGHT MR16

These housings are built for ceilings with insulation. They may be used in new construction, remodeling or acoustic tile applications. Adjustable mounting bars allow for installation between 14.25" (360mm) to 26.00" (660mm). Can be installed in ceilings up to 1.75" (45mm) thick.

Socket, built-in thermal protection, "Quick Connect" wire connectors and magnetic transformer (120V / 12V) included.

For use with a MR16 style bulb, in either a halogen or LED type. Refer to trim model for specific bulb wattages.

Approved for humid locations, housing completely sealed, stops any air exchange within the ceiling cavity. Although this product is AIR-TIGHT rated, some municipalities will require the use of a vapor barrier (VP99). Verify local building codes prior to installation.

Ideal for high energy efficiency construction.

Not recommended for a sloped ceiling application.

A maximum of a 35W bulb may be installed in this housing.

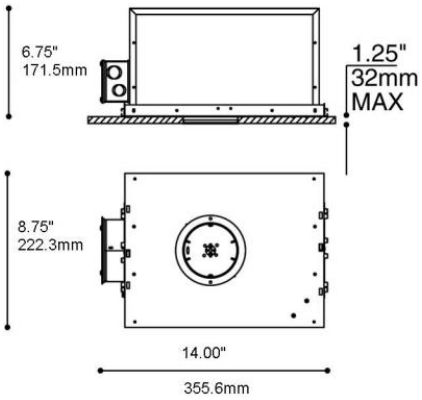

TRIMS FOR THIS PRODUCT

TR1510, TR1530, TR1615, TR1625, TR1575, TR1675, TR1515, TR1565

Technical information

Height	6.75" (171.5 mm)
Width	8.75" (222.3 mm)
Length	14" (355.6 mm)
Cutting hole	4.38" (111.3 mm)
Voltage	12V
Bulb (MR16)	35W

Tel. : 514 695-8228 1 855 739-8228
Fax : 514 695-9009 1 855 812-9009



K150H-45-MED

4.50" PAR30 REMODEL HOUSING - IC / NON-IC

These housings are constructed of heavy-duty steel and a tight assembly so as to avoid noise and vibration.

The mounting system allows a quick, easy and sturdy installation, using the automatic positioning feature. - 2 screw system

For use with a PAR30 style bulb, in either a halogen or LED type.

Insulated Ceiling Application; the use of an LED type bulb is required.

Refer to trim model for specific bulb wattages.

Mainly used for renovation or ceilings with limited space. New Construction or acoustic tiles.

Can be installed in ceilings with, up to 1.25" (32mm) of thickness. Approved for damp locations, with built-in thermal protection and "Quick Connect wire connectors included.

Some municipalities will require the use of a vapor barrier in an insulated application. Verify local building codes prior to installation

TRIMS FOR THIS PRODUCT

TR1950

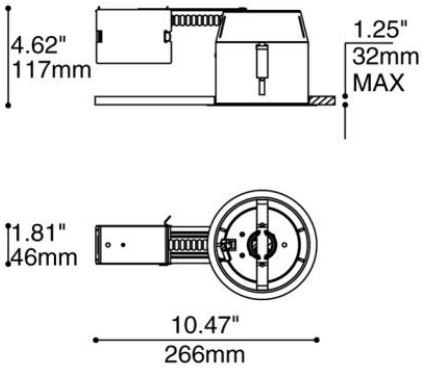

Technical information

Height	4.62" (117.3 mm)
Length	10.47" (265.9 mm)
Cutting hole	4.65" (118.1 mm)
Voltage	120V
Mounting Plate	MP450 - AMP450
Mounting Plate	MPHB-450

Tel. : 514 695-8228 1 855 739-8228
Fax : 514 695-9009 1 855 812-9009



R450-MED

4.50" PAR30 REMODEL HOUSING - IC / NON-IC

Housings constructed of heavy duty galvanized steel with junction box - Built-in thermal protection

For use with a PAR30 style bulb, in either a halogen or LED type. Refer to trim model for specific bulb wattages.

Patented adjustable mounting clips (3) and "Quick Connect" wire connectors, allow for a quick, easy and sturdy installation

Can be installed in ceilings up to 1.25" (32mm) in thickness. New Construction or acoustic tiles

Approved for damp locations

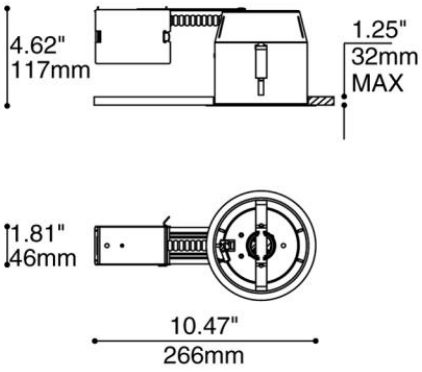

TRIMS FOR THIS PRODUCT

TR1950

Technical information

Height	4.62" (117.3 mm)
Length	10.47" (265.9 mm)
Cutting hole	4.65" (118.1 mm)
Voltage	120V
Mounting Plate	MP450 - AMP450
Mounting Plate	MPHB-450

Tel. : 514 695-8228 1 855 739-8228
Fax : 514 695-9009 1 855 812-9009



NC450-MED

4.5" PAR30 NEW CONSTRUCTION HOUSING - IC / IC-NON

Housings constructed of heavy duty galvanized steel with junction box - Built-in thermal protection

Ideal for open ceilings - New Construction or acoustic tiles

For use with a PAR30 style bulb, in either a halogen or LED type.

Insulated Ceiling Application; the use of an LED type bulb is required.

Refer to trim model for specific bulb wattages.

Adjustable mounting bars included, allows for installation between 13.00" (320mm) and 26.00"(660mm) openings. "Quick Connect" wire connectors included. Can be installed in ceilings up to 1.25" (32mm) in thickness

Approved for damp locations

Some municipalities will require the use of a vapor barrier in an insulated application. Verify local building codes prior to installation.

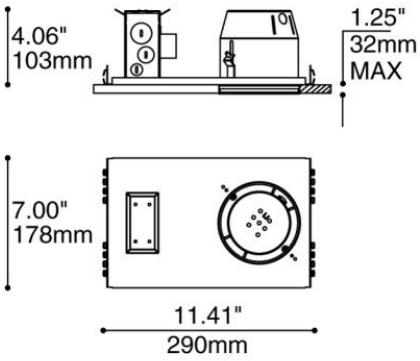

TRIMS FOR THIS PRODUCT

TR1950

Technical information

Height	4.06" (103.1 mm)
Width	7" (177.8 mm)
Length	11.41" (289.8 mm)
Cutting hole	4.65" (118.1 mm)
Voltage	120V

Tel. : 514 695-8228 1 855 739-8228
Fax : 514 695-9009 1 855 812-9009



IC450-MED

4.50" INSULATED CEILING HOUSING - PAR30

These compact housings are built for ceilings with insulation. They may be used in new construction, remodeling or acoustic tile applications.

Adjustable mounting bars allow for installation between 14.25" (360mm) to 26.00" (660mm). Can be installed in ceilings up to 2.00" (50mm) thick.

For use with a PAR30 style bulb, in either a halogen or LED type. Refer to trim model for specific bulb wattages.

Socket, Quick Connect wire connectors and built-in thermal protection included.

Approved for humid locations, housing completely sealed, stops any air exchange within the ceiling cavity. Although this product is AIR-TIGHT rated, some municipalities will require the use of a vapor barrier (VP99). Verify local building codes prior to installation.

Ideal for high energy efficiency construction.

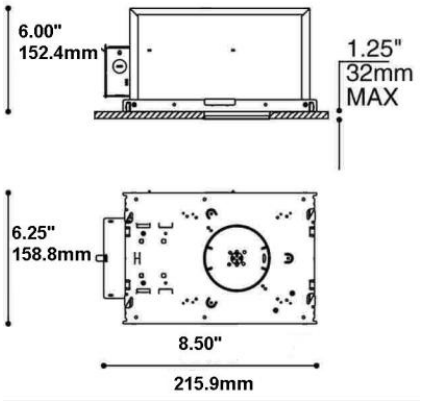

TRIMS FOR THIS PRODUCT

TR1950

Technical information

Height	6" (152.4 mm)
Width	6.25" (158.8 mm)
Length	8.5" (215.9 mm)
Cutting hole	4.65" (118.1 mm)
Voltage	120V

Tel. : 514 695-8228 1 855 739-8228
Fax : 514 695-9009 1 855 812-9009



R500-MED

5.00" PAR30/BR30 IC/NON-IC REMODEL HOUSING

This 5.00" housing is constructed of ALUMINIUM with junction box - Built-in thermal protection

This housing is designed for a retro-fit application, in either an INSULATED or NON-INSULATED environment.

For use with a PAR30 or BR30 style bulb, in either a halogen or LED type. Refer to trim model for specific bulb wattages.

This unit comes complete with patented adjustable mounting clips (3) and "Quick Connect" wire connectors; for a quick, easy and sturdy installation.

Can be installed in ceilings up to 1.25" (32mm) in thickness.
New Construction or acoustic tiles.
Approved for damp locations.

Airtight certified, however some municipalities will require the use of a vapor barrier when installing this unit in an insulated environment. Verify local building codes prior to installation.

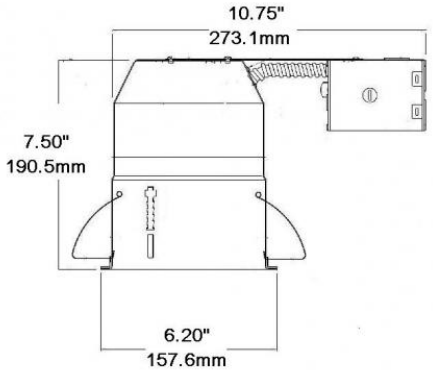

TRIMS FOR THIS PRODUCT

TR2125, TR2050, TR2225, TR2040, TR2025, BA50

Technical information

Height	7.50" (190.5 mm)
Length	10.75" (273.1 mm)
Cutting hole	5.66" (143.8 mm)
Voltage	120V
AIR TIGHT Approved	ASTM E283 - 04

Tel. : 514 695-8228 1 855 739-8228
Fax : 514 695-9009 1 855 812-9009



NC500-MED

5.00" PAR30/BR30 IC/NON-IC NC HOUSING

This 5.00" housing is constructed of heavy duty galvanized steel for the mounting plate, junction box and hanger bars, in conjunction with full aluminum can. - Built-in thermal protection

Ideal for INSULATED or NON-INSULATED new constructions or acoustic tile applications.

For use with a PAR30 or BR30 style bulbs, in either a halogen or LED type. Refer to trim model for specific bulb wattages.

Adjustable mounting bars included, allows for installation between 13.00" (320mm) and 26.00"(660mm) openings.

"Quick Connect" wire connectors included

Can be installed in ceilings up to 2.00" (50mm) in thickness

Approved for damp locations

Airtight certified, however some municipalities will require the use of a vapor barrier (VP99) when installing this unit in an insulated environment. Verify local building codes prior to installation.

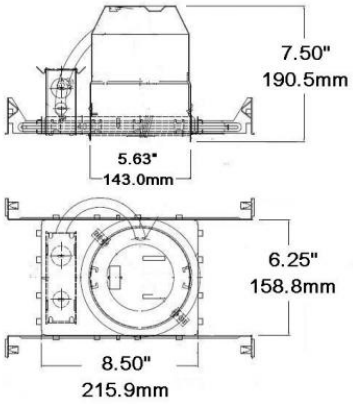

TRIMS FOR THIS PRODUCT

TR2050, TR2125, TR2040, TR2225, BA50, TR2025

Technical information

Height	7.50" (190.5 mm)
Width	6.25" (158.8 mm)
Length	8.50" (215.9 mm)
Cutting hole	5.66" (143.8 mm)
Voltage	120V
AIR TIGHT Approved	ASTM E283 - 04

Tel. : 514 695-8228 1 855 739-8228
Fax : 514 695-9009 1 855 812-9009











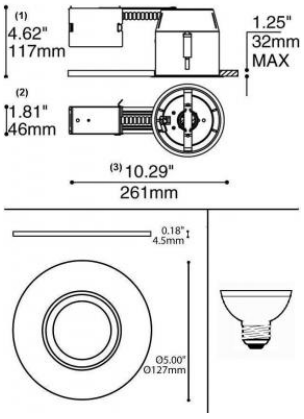

KRS1530

4.25" LED RECESSED LIGHTING KIT - PAR16

Product codes

KRS1530-WH : WHITE

KRS1530-SC : SATIN CHROME

This is an ALL-IN-ONE solution for recessed lighting. This LED recessed lighting kit includes a 4.25" IC AND AIR Tight rated remodel housing, 4.25" gimbal trim and a LED PAR16 bulb.

These housings are constructed of heavy-duty steel. The mounting system allows a quick, easy and sturdy installation, using the automatic positioning feature. - 2 screw system, "Quick Connect wire connectors and built-in thermal protection.

When installing in an insulated ceiling, the use of an LED type bulb is required. Approved for damp locations.

Can be installed in ceilings with, up to 1.25" (32mm) of thickness. New Construction or acoustic tiles.

Some municipalities will require the use of a vapor barrier in an insulated application. Verify local building codes prior to installation.

A complete listing of compatible dimmers may be found in our "Product Knowledge" section of our site.

Technical information

Height (1)	4.62" (117.3 mm)
Width (2)	1.81" (46.0 mm)
Length (3)	10.29" (261.4 mm)
Cutting hole	4.38"
Trim Diameter	5.00" (127.0 mm)
Bulb	PAR16, 6.5W LED
Dimmable	Y
Housing Warranty (Years)	1
Bulb Warranty (Years)	5

Tel. : 514 695-8228 1 855 739-8228
Fax : 514 695-9009 1 855 812-9009











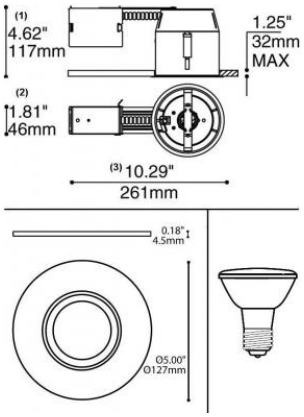

KRS1350

4.25" LED RECESSED LIGHTING KIT - PAR20

Product codes

KRS1350-WH : WHITE

KRS1350-SC : SATIN CHROME

This is an ALL-IN-ONE solution for recessed lighting. This LED recessed lighting kit includes a 4.25" IC AND AIR Tight rated remodel housing, 4.25" gimbal trim and a LED PAR20 bulb.

These housings are constructed of heavy-duty steel. The mounting system allows a quick, easy and sturdy installation, using the automatic positioning feature. - 2 screw system, "Quick Connect wire connectors and built-in thermal protection.

When installing in an insulated ceiling, the use of an LED type bulb is required. Approved for damp locations.

Can be installed in ceilings with, up to 1.25" (32mm) of thickness. New Construction or acoustic tiles.

Some municipalities will require the use of a vapor barrier in an insulated application. Verify local building codes prior to installation.

A complete listing of compatible dimmers may be found in our "Product Knowledge" section of our site.

Technical information

Height (1)	4.62" (117.3 mm)
Width (2)	1.81" (46.0 mm)
Length (3)	10.29" (261.4 mm)
Cutting hole	4.38" (111.3 mm)
Trim Diameter	5.00" (127.0 mm)
Bulb	PAR20, 7W LED
Dimmable	Y
Housing Warranty (Years)	1
Bulb Warranty (Years)	5

Tel. : 514 695-8228 1 855 739-8228
Fax : 514 695-9009 1 855 812-9009





WHITE CHROME

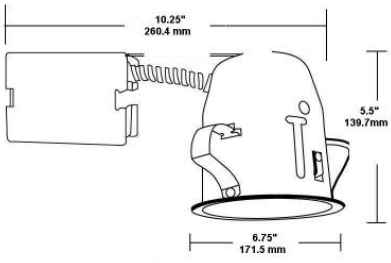

1770

4.5" R20/PAR20 SHOWER TRIM & HOUSING (1770)

Product codes

1770-CHR : CHROME

1770-WH : WHITE

4.5" shower trim and housing for installation in insulated or non-insulated ceiling -Built-in thermal protection

For use with A19 - 40W, CFL or PAR20 - 50W Bulb

Bulbs NOT included

Certified for humid locations such as showers

Features frosted glass

Technical information

Diameter	6.75" (171.5 mm)
Height	5.5" (139.7 mm)
Length	10.25" (260.4 mm)
Cutting hole	4.5" (114.3 mm)
Voltage	120V
Bulb	A19, CFL, PAR20

Tel. : 514 695-8228 1 855 739-8228
Fax : 514 695-9009 1 855 812-9009



K150H-35B-MED-WH

3.5" R20/PAR20 DOWNLIGHT HOUSING

Sold in 12-pack cases

These complete units include housing and trim with built-in thermal protection.

For use with a PAR20 or R20 style bulb, in either a halogen or LED type.

The mounting system allows a quick, easy and sturdy installation, using the automatic positioning feature. - 2 screw system

Provides a perfect combination of line voltage (120V) recessed lighting with easy installation and good quality, all at an affordable price

May be installed in insulated or non-insulated ceilings. For insulated ceilings, use insulated box #IB410 and Vapour Barrier #VP99

Aluminum construction ideal for outdoor applications - soffits

ALSO AVAILABLE:
3.5" - White Baffle (BA35-WH)
3.5" - Black Baffe (BA35-BLK)

Bulb not included

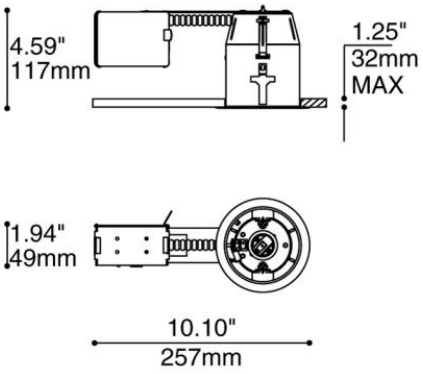

Technical information

Height	4.59" (116.6 mm)
Length	10.1" (256.5 mm)
Cutting hole	3.65" (92.7 mm)
Voltage	120V
Bulb	R20/PAR20 50W
Bulb	PAR20 LED / DEL
Mounting Plate	MP350 - AMP350
Mounting Plate	MPHB-350

Tel. : 514 695-8228 1 855 739-8228
Fax : 514 695-9009 1 855 812-9009



k150H-45B-MED-WH

4.5" R30/PAR30 DOWNLIGHT HOUSING

Sold in 12-pack cases

These complete units include housing and trim with built-in thermal protection.

For use with a PAR30, BR30 style bulb, in either a halogen or LED type.

The mounting system allows a quick, easy and sturdy installation, using the automatic positioning feature. - 2 screw system

Adjustable socket feature, allows for various R30/PAR30 type bulbs

Provides a perfect combination of line voltage (120V) recessed lighting with easy installation and good quality, all at an affordable price

May be installed in insulated or non-insulated ceilings. For insulated ceilings, use insulated box #IB410 and Vapour Barrier #VP99

Aluminum construction ideal for outdoor applications - soffits

ALSO AVAILABLE:
4.5" - White Baffle (BA45-WH)
4.5" - Black Baffe (BA45-BLK)

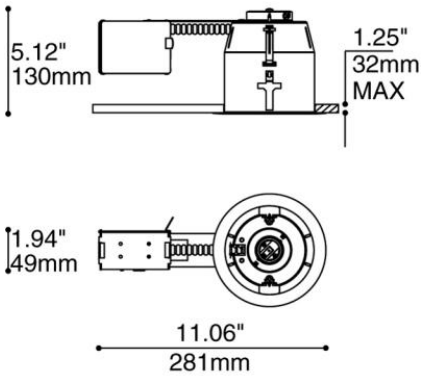

Technical information

Height	5.11" (129.8 mm)
Length	11.06" (280.9 mm)
Cutting hole	4.65" (118.1 mm)
Voltage	120V
Bulb	PAR30/BR30 75W
Bulb	PAR30 LED / DEL
Mounting Plate	MP450 - AMP450
Mounting Plate	MPHB-450

Tel. : 514 695-8228 1 855 739-8228
Fax : 514 695-9009 1 855 812-9009



10WH Cyberlite

3.5" R20 / PAR20 OPEN TRIM HOUSING - Aluminum(BX)

Product codes

10WHBP-AL : WHITE

The CYBERLITE collection is designed for a contractor looking for an affordable solution to recessed lighting. This versatile collection may be used for indoor or outdoor applications. Its aluminum construction is ideally suited for outdoor installations, such as home soffits.

Each unit comes complete with a mounting plate, mounting clips and an 18" BX cable, for quick connection into a junction box. Built-in thermal protection included.

For use with a PAR20, R20 style bulb, in either a halogen or LED type.

May be installed in insulated or non-insulated ceilings. For insulated ceilings, use insulated box #IB410 and Vapour Barrier #VP99

This product is sold in contractor packs of 12 units.

ALSO AVAILABLE:
Decorative baffle available in either White (BA35WH) or Black (BA35BLK)

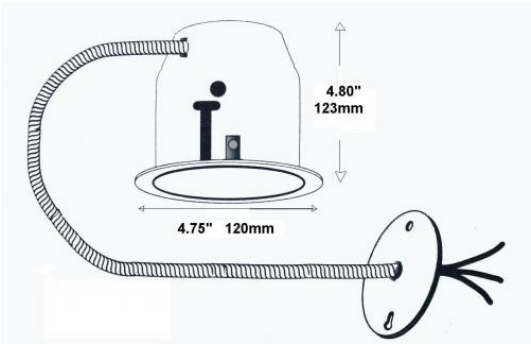

Technical information

Height	4.50" (114.3 mm)
Diameter	4.75" (120.7 mm)
Cutting hole	3.88" (98.6 mm)
Voltage	120V
Bulb	PAR20/R20, 50W
Bulb	PAR20/R20, LED

Tel. : 514 695-8228 1 855 739-8228
Fax : 514 695-9009 1 855 812-9009




WHITE


BLACK


CLAY


NUGGET

22WH Cyberlite

4.5" BR30 / PAR30 OPEN TRIM HOUSING - Aluminum(BX)

Product codes

22ARBP-AL : CLAY
22BLKBP-AL : BLACK
22NUBP-AL : NUGGET
22WHBP-AL : WHITE

The CYBERLITE collection is designed for a contractor looking for an affordable solution to recessed lighting. This versatile collection may be used for indoor or outdoor applications. Its aluminum construction is ideally suited for outdoor installations, such as home soffits.

Each unit comes complete with a mounting plate, mounting clips and an 18" BX cable, for quick connection into a junction box. Built-in thermal protection included.

For use with a PAR30, BR30 style bulb, in either a halogen or LED type.

May be installed in insulated or non-insulated ceilings. For insulated ceilings, use insulated box #IB410 and Vapour Barrier #VP99

This series is available in 4 popular colors; White, Black, Clay or Nugget. This product is sold in contractor packs of 12 units.

ALSO AVAILABLE:
Decorative baffle available in either White (BA45WH) or Black (BA45BLK)

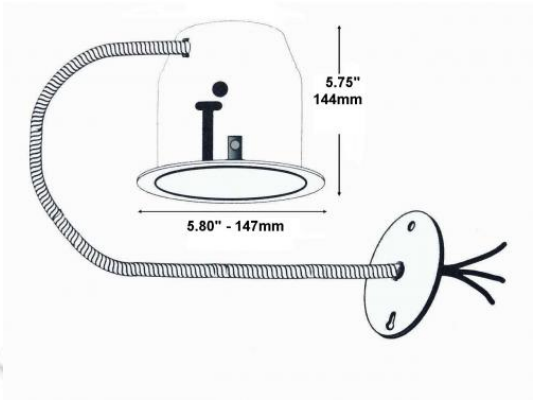

Technical information

Height (1)	5.75" (146.1 mm)
Diameter	5.80" (147.3 mm)
Cutting hole	4.65" (118.1 mm)
Voltage	120V
Bulb	PAR30/BR30, 75W
Bulb	PAR30 LED / DEL

Tel. : 514 695-8228 1 855 739-8228
Fax : 514 695-9009 1 855 812-9009







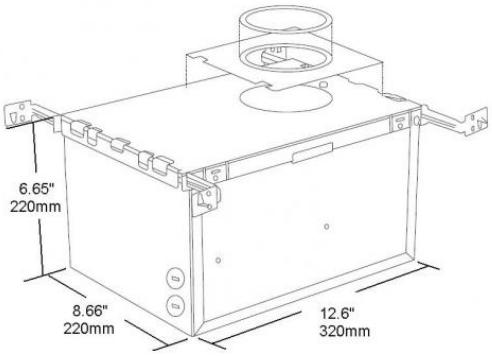

IB410

INSULATED BOX

These boxes are built for ceilings with insulation. Can be used in new construction, remodeling or acoustic tile applications.

Adjustable mounting bars allow for installation between 13.0" (320mm) to 26.0" (660mm) - included.

Resists to extreme temperatures

To be used in conjunction with any NDR remodel housings. Box will accommodate NDR remodel housings of 3.00", 4.25" or 4.50" diameters

Suited for the following remodel housings:
R300-GZ, R425-GZ, R425-MED, R425-MR or R450-MED
K150H-42-GZ, K150H-42-MED or K150H-45-MED
R300-L35 or R425-L35

Approved for damp locations, housing completely sealed, stops any air exchange within the ceiling cavity

Ideal for high energy efficiency construction

Galvanized steel construction

CSA & UL APPROVED

Technical information

Height	6.65" (168.9 mm)
Width	8.66" (220.0 mm)
Length	12.6" (320.0 mm)

Tel. : 514 695-8228 1 855 739-8228
Fax : 514 695-9009 1 855 812-9009



VP99

VAPOUR BARRIER

Vapor barrier unit to be used with all NDR insulated boxes.

Prevents the housing and trim from rusting

Ideal for high energy efficiency construction

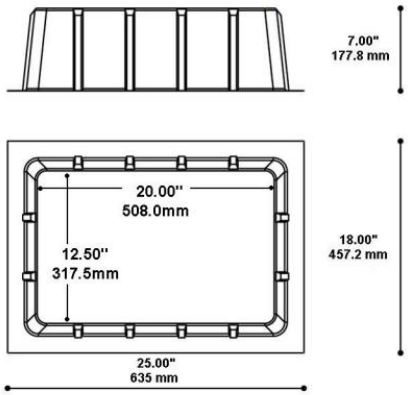

Technical information	
Height	7" (177.8 mm)
Width	18" (457.2 mm)
Length	25" (635.0 mm)

Tel. : 514 695-8228 1 855 739-8228
Fax : 514 695-9009 1 855 812-9009



BA35

3.5" BAFFLE for R20/PAR20

Product codes

BA35-BLK : BLACK
BA35-WH : WHITE

Baffle for use with R20/PAR20 housings

Available in black or white

HOUSINGS FOR THIS PRODUCT

K150H-35B-MED-WH



BLACK



WHITE

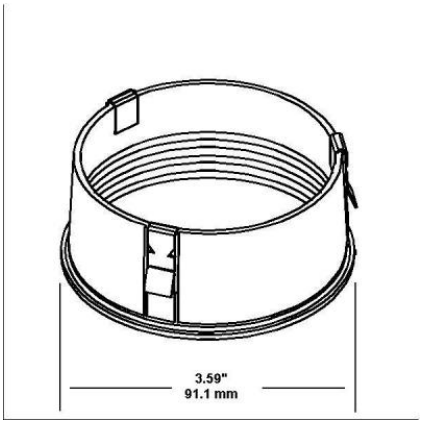

Technical information

Diameter	3.585" (91.1 mm)

Tel. : 514 695-8228 1 855 739-8228
Fax : 514 695-9009 1 855 812-9009



BA45

4.5" BAFFLE for R30/PAR30

Product codes

BA45-WH : WHITE
BA45-BLK : BLACK

Baffle for use with R30/PAR30 housings

Available in black or white

HOUSINGS FOR THIS PRODUCT

k150H-45B-MED-WH



WHITE



BLACK

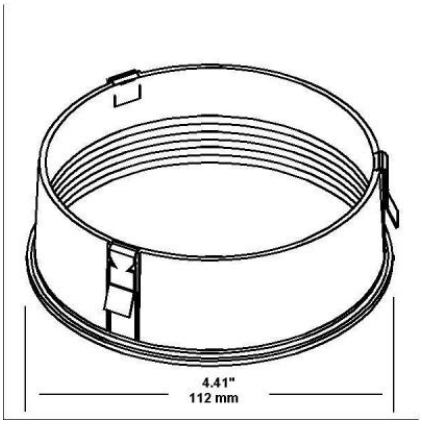

Technical information

Diameter	4.41" (112.0 mm)

Tel. : 514 695-8228 1 855 739-8228
Fax : 514 695-9009 1 855 812-9009



MP

MOUNTING PLATE

Product codes

MP350 : 3.50" Diameter of Hole
MP300 : 3.00" Diameter of Hole
MP425 : 4.25" Diameter of Hole
MP450 : 4.50" Diameter of hole
MP500 : 5.00" Diameter of Hole

Versatile mounting plate allows installation of all models of re-model and open trim housings

Available in 5 hole diameters; 3.00", 3.50", 4.25", 4.50" and 5.00".

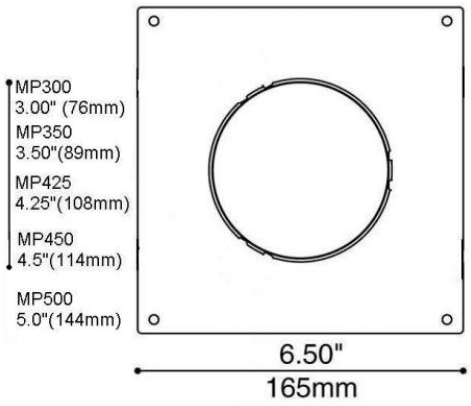

Technical information

Width	6.5" (165.1 mm)
Length	6.5" (165.1 mm)

Tel. : 514 695-8228 1 855 739-8228
Fax : 514 695-9009 1 855 812-9009

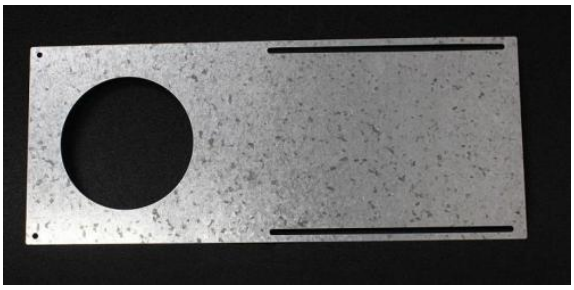

AMP

ADJUSTABLE MOUNTING PLATE

Product codes

AMP350 : 3.50" Diameter of Hole
AMP425 : 4.25" Diameter of Hole
AMP300 : 3.00" Diameter of Hole
AMP450 : 4.50" Diameter of Hole
AMP500 : 5.00" Diameter of Hole
AMP600 : 6.00" Diameter of Hole

Versatile adjustable mounting plate allows installation of all re-model or open trim housings.

Available in 6 hole diameters; 3.00", 3.50", 4.25", 4.50", 5.00" and 6.00".

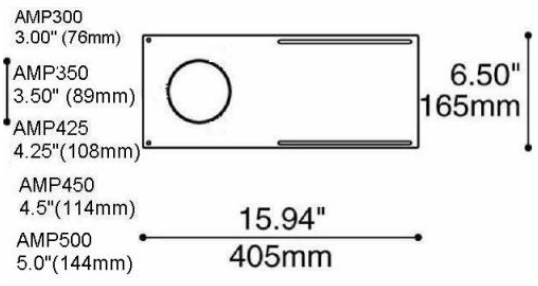

Technical information

Width	6.5" (165.1 mm)
Length	15.94" (404.9 mm)

Tel. : 514 695-8228 1 855 739-8228
Fax : 514 695-9009 1 855 812-9009

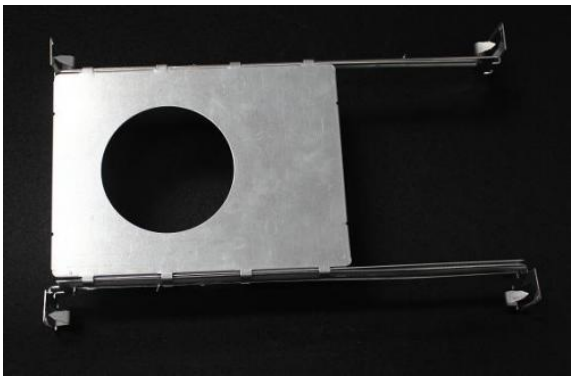

MPHB

MOUNTING PLATE with ADJUSTABLE HANGER BARS

Product codes

MPHB-300 : 3.00" Diameter of hole
MPHB-350 : 3.50" Diameter of Hole
MPHB-425 : 4.25" Diameter of hole
MPHB-450 : 4.50" Diameter of hole

Versatile mounting plate allows installation of all models of re-model and open trim housings

Ideal for open ceilings with no insulation, soffits, new constructions or acoustic tiles

Adjustable mounting bars included, allows for installation between 13.00" (320mm) and 26.00"(660mm) openings

Available in 4 hole diameters; 3.00", 3.50", 4.25" and 4.50"

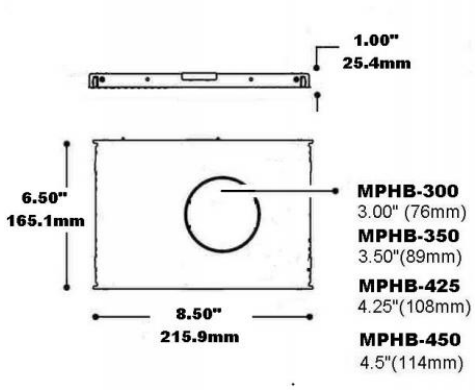

Technical information

Width	6.5" (165.1 mm)
Length	8.5" (215.9 mm)

Tel. : 514 695-8228 1 855 739-8228
Fax : 514 695-9009 1 855 812-9009





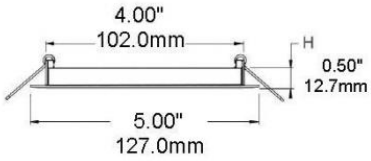

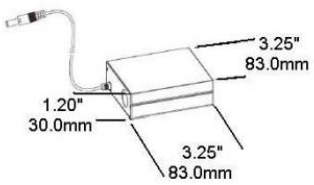

RZR-LED-400

4.00" ULTRA THIN LED RAZOR SERIES - 9W

Product codes

RZR-400-9W-3K-WH : WHITE - 3K
RZR-400-9W-3K-SC : SATIN CHROME - 3K
RZR-400-9W-4K-WH : WHITE - 4K
RZR-400-9W-4K-SC : SATIN CHROME - 4K
RZR-400-9W-3K-BLK : BLACK - 3K
RZR-400-9W-4K-BLK : BLACK - 4K

This ultra-thin recessed unit is IC and AIR TIGHT rated and with its thin profile allows installation in almost any location. It is suitable for wet locations, such as a shower and outdoors in soffits. Included with the unit is a junction box with driver, pressure fit clips and Quick Connect wire connectors for quick and easy installation. The junction box has integrated screw holes to allow the box to be secured to studs or joists, if needed. The maximum number of the 9W fixtures that can be installed with a standard 150W LED dimmer is 16 units. The 3K & 4K models replace a 600 lumen 50W halogen style bulb. This product is ETL certified, conforms to UL standard 1598 and CSA standard C22.2 NO. 250.0. A complete listing of compatible dimmers may be found in our "Product Knowledge" section of our site. Although this product is AIR-TIGHT rated, some municipalities will require the use of a vapor barrier. Verify local building codes prior to installation.

Technical information

Cutting hole	4.25" (108.0 mm)
Beam Spread	107°
Color Temperature	3000k / 4000k
Certification	ETL
Certification	Energy Star
CRI	>80
Diameter	5" (127.0 mm)
Dimmable	Y
LED Life	50000 hrs
Light Output - Lumen	650LM
Operating Temperature	-40°c + 40°c
Voltage	120V
Warranty (Years)	5
Watt	9W

Tel. : 514 695-8228 1 855 739-8228
Fax : 514 695-9009 1 855 812-9009





RZR-LED-600

6.00" ULTRA THIN LED RAZOR SERIES - 12W

Product codes

RZR-600-12W-3K-WH : WHITE - 3K
RZR-600-12W-3K-SC : SATIN CHROME - 3K
RZR-600-12W-4K-WH : WHITE - 4K
RZR-600-12W-4K-SC : SATIN CHROME - 4K
RZR-600-12W-3K-BLK : BLACK - 3K
RZR-600-12W-4K-BLK : BLACK - 4K

This ultra-thin recessed unit is IC and AIR TIGHT rated and with its thin profile allows installation in almost any location. It is suitable for wet locations, such as a shower and outdoors in soffits. Included with the unit is a junction box with driver, pressure fit clips and Quick Connect wire connectors for quick and easy installation. The junction box has integrated screw holes to allow the box to be secured to studs or joists, if needed. The maximum number of the 12W fixtures that can be installed with a standard 150W LED dimmer is 12 units. The 3K & 4k model replaces a 800 lumen 65W halogen style bulb.This product is ETL certified, conforms to UL standard 1598 and CSA standard C22.2 NO. 250.0. A complete listing of compatible dimmers may be found in our "Product Knowledge" section of our site. Although this product is AIR-TIGHT rated, some municipalities will require the use of a vapor barrier. Verify local building codes prior to installation.

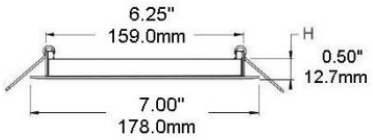

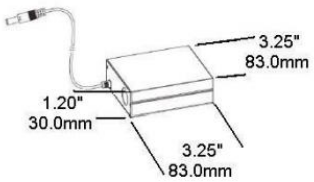

Technical information

Cutting hole	6.33" (160.8 mm)
Beam Spread	107°
Color Temperature	3000k / 4000k
Certification	ETL
Certification	Energy Star
CRI	>80
Diameter	7.0"
Dimmable	Y
LED Life	50000 hrs
Light Output - Lumen	950LM
Operating Temperature	-40°c + 40°c
Voltage	120V
Warranty (Years)	5
Watt	12W

Tel. : 514 695-8228 1 855 739-8228
Fax : 514 695-9009 1 855 812-9009



JOINRZR-24IN

24" EXTENSION CABLE - LED RAZOR SERIES

Product codes

JOINRZR-24IN : WHITE

This 24" Connecting Cable is for use with NDR Electric RAZOR Series.

This cable allows for greater flexibility in designing custom layout needs

WHITE

Technical information

Length	24" (609.6 mm)

Tel. : 514 695-8228 1 855 739-8228
Fax : 514 695-9009 1 855 812-9009



JOINRZR-20FT

20' EXTENSION CABLE - LED RAZOR SERIES

Product codes

JOINRZR-20FT : WHITE

This 20' Connecting Cable is for use with NDR Electric RAZOR Series.

This cable allows for greater flexibility in designing custom layout needs.

WHITE

Technical information

Length	240" (609.60 cm)

Tel. : 514 695-8228 1 855 739-8228
Fax : 514 695-9009 1 855 812-9009



UNSLK-35K-10SC

10" LED SLEEK SERIES UNDERCABINET

Product codes

UNSLK-35K-10SC : SATIN CHROME

The LED SLEEK Series is compact and ultra thin in design, with easy connections using the joiner and connecting cable included. Ideal for use under cabinets, closets and work stations.

LED (Light emitting Diode) offers lower energy consumption and longer life (40,000 hrs) over incandescent and fluorescent lighting. Color temperature: 3500 Kelvin.

FEATURES INCLUDE:

Aluminum construction
Easily accessible ON/OFF switch
Joiner, 6" connecting cable and installation hardware included
40,000 hours of LED life
Dimmable with 12V dimmer, UNDIML-12V-BLK
3 Watt (3 X 1W LED)
3 year limited warranty

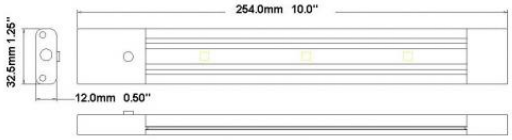

Technical information

CRI	80
Color Temperature	3500K
Light Output - Lumen	255
Height	0.5" (12.7 mm)
Width	1.25" (31.8 mm)
Length	10" (254.0 mm)
Voltage	12V
Bulb	3 x 1W LED/DEL
Warranty (Years)	3

Tel. : 514 695-8228 1 855 739-8228
Fax : 514 695-9009 1 855 812-9009





UNSLK-35K-20SC

20" LED SLEEK SERIES UNDERCABINET

Product codes

UNSLK-35K-20SC : SATIN CHROME

The LED SLEEK Series is compact and ultra thin in design, with easy connections using the joiner and connecting cable included. Ideal for use under cabinets, closets and work stations.

LED (Light emitting Diode) offers lower energy consumption and longer life (40,000 hrs) over incandescent and fluorescent lighting. Color temperature: 3500 Kelvin.

FEATURES INCLUDE:

Aluminum construction
Easily accessible ON/OFF switch
Joiner, 6" connecting cable and installation hardware included
40,000 hours of LED life
Dimmable with 12V dimmer, UNDIML-12V-BLK
6 Watt (6 X 1W LED)
3 year limited warranty

Technical information

Light Output - Lumen	510
CRI	80
Color Temperature	3500K
Height	0.5" (12.7 mm)
Width	1.25" (31.8 mm)
Length	20" (508.0 mm)
Voltage	12V
Bulb	6 x 1W LED/DEL
Warranty (Years)	3

Tel. : 514 695-8228 1 855 739-8228
Fax : 514 695-9009 1 855 812-9009



UNSLK-35K-30SC

30" LED SLEEK SERIES UNDERCABINET

Product codes

UNSLK-35K-30SC : SATIN CHROME

The LED SLEEK Series is compact and ultra thin in design, with easy connections using the joiner and connecting cable included. Ideal for use under cabinets, closets and work stations.

LED (Light emitting Diode) offers lower energy consumption and longer life (40,000 hrs) over incandescent and fluorescent lighting. Color temperature: 3500 Kelvin.

FEATURES INCLUDE:

Aluminum construction
Easily accessible ON/OFF switch
Joiner, 6" connecting cable and installation hardware included
40,000 hours of LED life
Dimmable with 12V dimmer, UNDIML-12V-BLK
9 Watt (9 X 1W LED)
3 year limited warranty



Technical information

Light Output - Lumen	765
CRI	80
Color Temperature	3500K
Height	0.5" (12.7 mm)
Width	1.25" (31.8 mm)
Length	30" (762.0 mm)
Voltage	12V
Bulb	9 x 1W LED/DEL
Warranty (Years)	3

Tel. : 514 695-8228 1 855 739-8228
Fax : 514 695-9009 1 855 812-9009



UNL50DIM-L35-8

8" LED - LUCIA SERIES - DIMMABLE

Product codes

UNL50DIM-L35-8WH : WHITE

Aluminum construction - DIMMABLE & Hardwire Application Only

This unit includes an ON-OFF switch, multiple knockout locations for easy and quick installation, as well as diffused frosted glass, which allows for even light distribution. Ideal for use under cabinets, closets and work stations.

LED (Light emitting Diode) offers lower energy consumption and longer life (40,000 hrs) over incandescent and fluorescent lighting.

Color temperature: 3500 Kelvin.
Dimmable, Maximum of 100 WATTS in sequence

INCLUDED:
Aluminum construction
Integrated Driver
Easily accessible ON/OFF switch
Installation hardware
Multiple Knockout Locations

A complete listing of compatible dimmers may be found in our "Product Knowledge" section of our site.

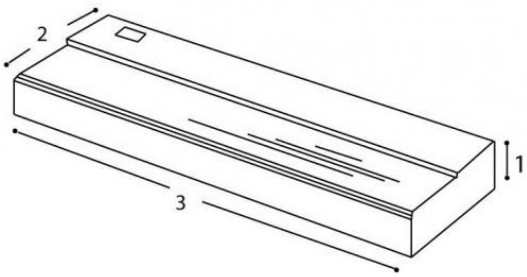

Technical information

CRI	80
Color Temperature	3500K
Voltage	120V
Watt	3W
Height (1)	1.25"
Width (2)	3.5"
Length (3)	8.0"
Light Output - Lumen	354
Warranty (Years)	3

Tel. : 514 695-8228 1 855 739-8228
Fax : 514 695-9009 1 855 812-9009



UNL50DIM-L35-12

12'' LED - LUCIA SERIES - DIMMABLE

Product codes

UNL50DIM-L35-12WH : WHITE

Aluminum construction - DIMMABLE & Hardwire Application Only

This unit includes an ON-OFF switch, multiple knockout locations for easy and quick installation, as well as diffused frosted glass, which allows for even light distribution. Ideal for use under cabinets, closets and work stations.

LED (Light emitting Diode) offers lower energy consumption and longer life (40,000 hrs) over incandescent and fluorescent lighting.

Color temperature: 3500 Kelvin.
Dimmable, Maximum of 100 WATTS in sequence

INCLUDED:
Aluminum construction
Integrated Driver
Easily accessible ON/OFF switch
Installation hardware
Multiple Knockout Locations

A complete listing of compatible dimmers may be found in our "Product Knowledge" section of our site.

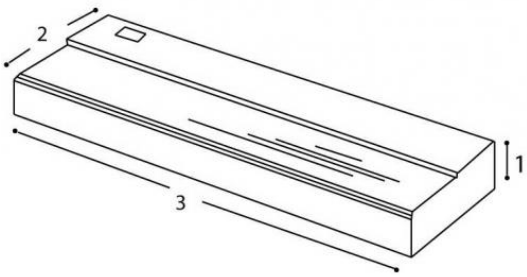

Technical information

CRI	80
Color Temperature	3500K
Voltage	120V
Watt	5W
Height (1)	1.25" (31.8 mm)
Width (2)	3.5" (88.9 mm)
Length (3)	12" (304.8 mm)
Light Output - Lumen	590
Warranty (Years)	3

Tel. : 514 695-8228 1 855 739-8228
Fax : 514 695-9009 1 855 812-9009



UNL50DIM-L35-21

21" LED - LUCIA SERIES - DIMMABLE

Product codes

UNL50DIM-L35-21WH : WHITE

Aluminum construction - DIMMABLE & Hardwire Application Only

This unit includes an ON-OFF switch, multiple knockout locations for easy and quick installation, as well as diffused frosted glass, which allows for even light distribution. Ideal for use under cabinets, closets and work stations.

LED (Light emitting Diode) offers lower energy consumption and longer life (40,000 hrs) over incandescent and fluorescent lighting.

Color temperature: 3500 Kelvin.
Dimmable, Maximum of 100 WATTS in sequence

INCLUDED:
Aluminum construction
Integrated Driver
Easily accessible ON/OFF switch
Installation hardware
Multiple Knockout Locations

A complete listing of compatible dimmers may be found in our "Product Knowledge" section of our site.

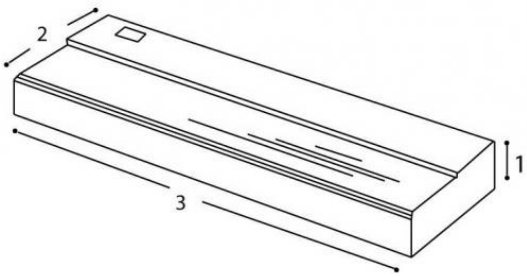

Technical information

CRI	80
Color Temperature	3500K
Voltage	120V
Watt	8W
Height (1)	1.25" (31.8 mm)
Width (2)	3.5" (88.9 mm)
Length (3)	21.0" (533.4 mm)
Light Output - Lumen	944
Warranty (Years)	3

Tel. : 514 695-8228 1 855 739-8228
Fax : 514 695-9009 1 855 812-9009



UNL50DIM-L35-30

30" LED - LUCIA SERIES - DIMMABLE

Product codes

UNL50DIM-L35-30WH : WHITE

Aluminum construction - DIMMABLE & Hardwire Application Only

This unit includes an ON-OFF switch, multiple knockout locations for easy and quick installation, as well as diffused frosted glass, which allows for even light distribution. Ideal for use under cabinets, closets and work stations.

LED (Light emitting Diode) offers lower energy consumption and longer life (40,000 hrs) over incandescent and fluorescent lighting.

Color temperature: 3500 Kelvin.
Dimmable, Maximum of 100 WATTS in sequence

INCLUDED:
Aluminum construction
Integrated Driver
Easily accessible ON/OFF switch
Installation hardware
Multiple Knockout Locations

A complete listing of compatible dimmers may be found in our "Product Knowledge" section of our site.

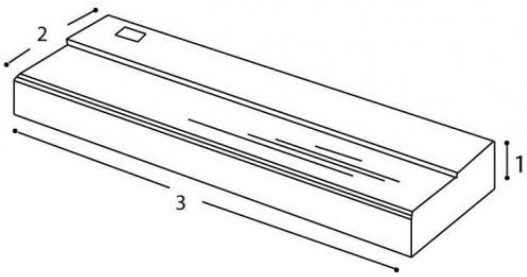

Technical information

CRI	80
Color Temperature	3500K
Voltage	120V
Watt	12W
Height (1)	1.25"
Width (2)	3.5"
Length (3)	30.0"
Light Output - Lumen	1416
Warranty (Years)	3

Tel. : 514 695-8228 1 855 739-8228
Fax : 514 695-9009 1 855 812-9009



UNL50DIM-L35-40

40" LED - LUCIA SERIES - DIMMABLE

Product codes

UNL50DIM-L35-40WH : WHITE

Aluminum construction - DIMMABLE & Hardwire Application Only

This unit includes an ON-OFF switch, multiple knockout locations for easy and quick installation, as well as diffused frosted glass, which allows for even light distribution. Ideal for use under cabinets, closets and work stations.

LED (Light emitting Diode) offers lower energy consumption and longer life (40,000 hrs) over incandescent and fluorescent lighting.

Color temperature: 3500 Kelvin.
Dimmable, Maximum of 100 WATTS in sequence

INCLUDED:
Aluminum construction
Integrated Driver
Easily accessible ON/OFF switch
Installation hardware
Multiple Knockout Locations

A complete listing of compatible dimmers may be found in our "Product Knowledge" section of our site.

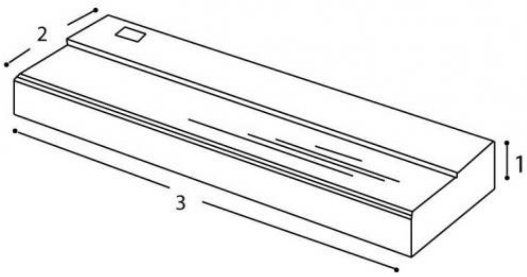

Technical information

CRI	80
Color Temperature	3500K
Voltage	120V
Watt	16W
Height (1)	1.25" (31.8 mm)
Width (2)	3.5" (88.9 mm)
Length (3)	40.0" (1,016.0 mm)
Light Output - Lumen	1888
Warranty (Years)	3

Tel. : 514 695-8228 1 855 739-8228
Fax : 514 695-9009 1 855 812-9009



UNL50-L35-8

8" LED - LUCIA SERIES - HARDWIRE APPLICATION

Product codes

UNL50-L35-8WH : WHITE
UNL50-L35-8BLK : BLACK

Aluminum construction - Hardwire Application Only

This unit includes a HIGH/LOW/ON-OFF switch, multiple knockout locations for easy and quick installation, as well as diffused frosted glass, which allows for even light distribution. Ideal for use under cabinets, closets and work stations.

LED (Light emitting Diode) offers lower energy consumption and longer life (40,000 hrs) over incandescent and fluorescent lighting.

Color temperature: 3500 Kelvin.
Non-Dimmable, Maximum of 100 WATTS in sequence

INCLUDED:
Aluminum construction
Integrated Driver
Easily accessible HIGH/LOW/ON/OFF switch
Installation hardware
Multiple Knockout Locations

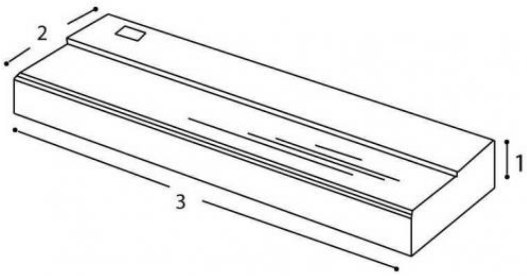

Technical information

CRI	80
Color Temperature	3500K
Voltage	120V
Watt	2W
Height (1)	1.25" (31.8 mm)
Width (2)	3.5" (88.9 mm)
Length (3)	8" (203.2 mm)
Light Output - Lumen	74 - 252
Warranty (Years)	3

Tel. : 514 695-8228 1 855 739-8228
Fax : 514 695-9009 1 855 812-9009



UNL50-L35-12

12" LED - LUCIA SERIES - HARDWIRE APPLICATION

Product codes

UNL50-L35-12WH : WHITE
UNL50-L35-12BLK : BLACK

Aluminum construction - Hardwire Application Only

This unit includes a HIGH/LOW/ON-OFF switch, multiple knockout locations for easy and quick installation, as well as diffused frosted glass, which allows for even light distribution. Ideal for use under cabinets, closets and work stations.

LED (Light emitting Diode) offers lower energy consumption and longer life (40,000 hrs) over incandescent and fluorescent lighting.

Color temperature: 3500 Kelvin.
Non-Dimmable, Maximum of 100 WATTS in sequence

INCLUDED:
Aluminum construction
Integrated Driver
Easily accessible HIGH/LOW/ON/OFF switch
Installation hardware
Multiple Knockout Locations

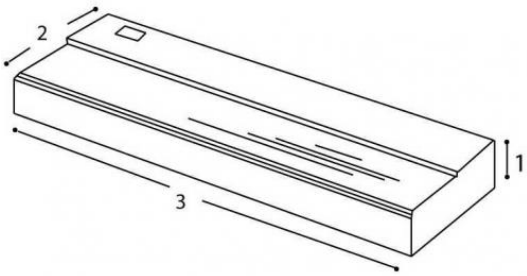

Technical information

CRI	80
Color Temperature	3500K
Voltage	120V
Watt	4W
Height (1)	1.25" (31.8 mm)
Width (2)	3.5" (88.9 mm)
Length (3)	12" (304.8 mm)
Light Output - Lumen	146 - 378
Warranty (Years)	3

Tel. : 514 695-8228 1 855 739-8228
Fax : 514 695-9009 1 855 812-9009



UNL50-L35-21

21" LED - LUCIA SERIES - HARDWIRE APPLICATION

Product codes

UNL50-L35-21WH : WHITE
UNL50-L35-21BLK : WHITE

Aluminum construction - Hardwire Application Only

This unit includes a HIGH/LOW/ON-OFF switch, multiple knockout locations for easy and quick installation, as well as diffused frosted glass, which allows for even light distribution. Ideal for use under cabinets, closets and work stations.

LED (Light emitting Diode) offers lower energy consumption and longer life (40,000 hrs) over incandescent and fluorescent lighting.

Color temperature: 3500 Kelvin.
Non-Dimmable, Maximum of 100 WATTS in sequence

INCLUDED:
Aluminum construction
Integrated Driver
Easily accessible HIGH/LOW/ON/OFF switch
Installation hardware
Multiple Knockout Locations

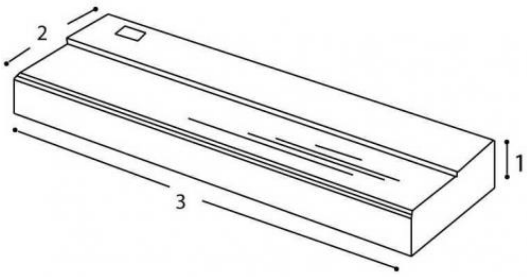

Technical information

CRI	80
Color Temperature	3500K
Voltage	120V
Watt	8W
Height (1)	1.25" (31.8 mm)
Width (2)	3.5" (88.9 mm)
Length (3)	21" (533.4 mm)
Light Output - Lumen	218 - 714
Warranty (Years)	3

Tel. : 514 695-8228 1 855 739-8228
Fax : 514 695-9009 1 855 812-9009



UNL50-L35-30

30" LED - LUCIA SERIES - HARDWIRE APPLICATION

Product codes

UNL50-L35-30WH : WHITE
UNL50-L35-30BLK : BLACK

Aluminum construction - Hardwire Application Only

This unit includes a HIGH/LOW/ON-OFF switch, multiple knockout locations for easy and quick installation, as well as diffused frosted glass, which allows for even light distribution. Ideal for use under cabinets, closets and work stations.

LED (Light emitting Diode) offers lower energy consumption and longer life (40,000 hrs) over incandescent and fluorescent lighting.

Color temperature: 3500 Kelvin.
Non-Dimmable, Maximum of 100 WATTS in sequence

INCLUDED:
Aluminum construction
Integrated Driver
Easily accessible HIGH/LOW/ON/OFF switch
Installation hardware
Multiple Knockout Locations

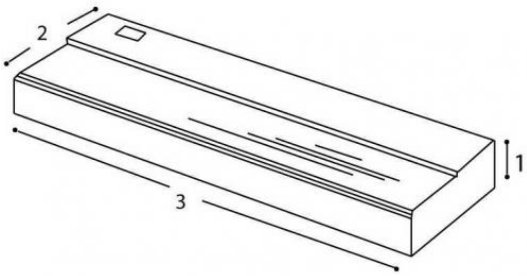

Technical information

CRI	80
Color Temperature	3500K
Voltage	120V
Watt	10W
Height (1)	1.25" (31.8 mm)
Width (2)	3.5" (88.9 mm)
Length (3)	30" (762.0 mm)
Light Output - Lumen	305 - 1008
Warranty (Years)	3

Tel. : 514 695-8228 1 855 739-8228
Fax : 514 695-9009 1 855 812-9009



UNL50-L35-40

40" LED - LUCIA SERIES - HARDWIRE APPLICATION

Product codes

UNL50-L35-40WH : WHITE
UNL50-L35-40BLK : BLACK

Aluminum construction - Hardwire Application Only

This unit includes a HIGH/LOW/ON-OFF switch, multiple knockout locations for easy and quick installation, as well as diffused frosted glass, which allows for even light distribution. Ideal for use under cabinets, closets and work stations.

LED (Light emitting Diode) offers lower energy consumption and longer life (40,000 hrs) over incandescent and fluorescent lighting.

Color temperature: 3500 Kelvin.
Non-Dimmable, Maximum of 100 WATTS in sequence

INCLUDED:
Aluminum construction
Integrated Driver
Easily accessible HIGH/LOW/ON/OFF switch
Installation hardware
Multiple Knockout Locations

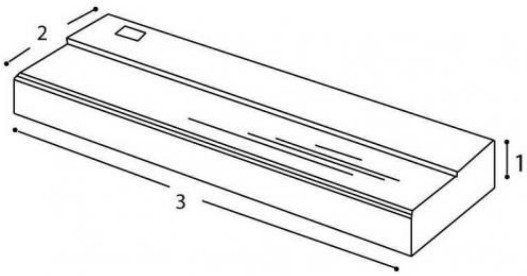

Technical information

CRI	80
Color Temperature	3500K
Voltage	120V
Watt	14W
Height (1)	1.25" (31.8 mm)
Width (2)	3.5" (88.9 mm)
Length (3)	40" (1,016.0 mm)
Light Output - Lumen	403 - 1344
Warranty (Years)	3

Tel. : 514 695-8228 1 855 739-8228
Fax : 514 695-9009 1 855 812-9009



UNCL-3K-9AL

9" LED - CUBE SERIES UNDERCABINET

Product codes

UNCL-3K-9AL : ALUMINUM

Aluminum construction
The LED CUBE Series is small, compact and linkable with easy connections using the joiner and connecting cable included. Ideal for use under cabinets, closets and work stations. Features a Polycarbonate Lens Cover.

LED (Light emitting Diode) offers lower energy consumption and longer life (40,000 hrs) over incandescent and fluorescent lighting. Color temperature: 3000 Kelvin. Non-Dimmable, Maximum of 100 WATTS in sequence

INCLUDED:
Aluminum construction
Integrated Driver and Transformer - Linkable 3 wire system
Easily accessible ON/OFF switch
Joiner, 6" connecting cable and installation hardware included
1 x 3W LED

ACCESSORIES:
72" Extension cord with plug
Junction Box
24" or 48" Connecting Cable

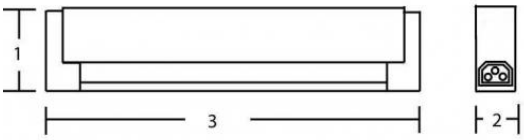

Technical information

CRI	80
Color Temperature	3000K
Voltage	120V
Watt	3W
Height (1)	1.25" (31.8 mm)
Width (2)	1.00" (25.4 mm)
Length (3)	8.88" (225.6 mm)
Light Output - Lumen	160
Warranty (Years)	3

Tel. : 514 695-8228 1 855 739-8228
Fax : 514 695-9009 1 855 812-9009



UNCL-3K-12AL

12" LED - CUBE SERIES UNDERCABINET

Product codes

UNCL-3K-12AL : ALUMINUM

Aluminum construction
The LED CUBE Series is small, compact and linkable with easy connections using the joiner and connecting cable included. Ideal for use under cabinets, closets and work stations. Features a Polycarbonate Lens Cover.

LED (Light emitting Diode) offers lower energy consumption and longer life (40,000 hrs) over incandescent and fluorescent lighting. Color temperature: 3000 Kelvin. Non-Dimmable, Maximum of 100 WATTS in sequence

INCLUDED:
Aluminum construction
Integrated Driver and Transformer - Linkable 3 wire system
Easily accessible ON/OFF switch
Joiner, 6" connecting cable and installation hardware included
1 x 6W LED

ACCESSORIES:
72" Extension cord with plug
Junction Box
24" or 48" Connecting Cable

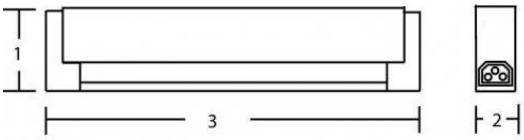

Technical information

CRI	80
Color Temperature	3000K
Voltage	120V
Watt	5W
Height (1)	1.25" (31.8 mm)
Width (2)	1" (25.4 mm)
Length (3)	12" (304.8 mm)
Light Output - Lumen	270
Warranty (Years)	3

Tel. : 514 695-8228 1 855 739-8228
Fax : 514 695-9009 1 855 812-9009



UNCL-3K-24AL

24" LED CUBE SERIES UNDERCABINET

Product codes

UNCL-3K-24AL : ALUMINUM

Aluminum construction
The LED CUBE Series is small, compact and linkable with easy connections using the joiner and connecting cable included. Ideal for use under cabinets, closets and work stations. Features a Polycarbonate Lens Cover.

LED (Light emitting Diode) offers lower energy consumption and longer life (40,000 hrs) over incandescent and fluorescent lighting. Color temperature: 3000 Kelvin. Non-Dimmable, Maximum of 100 WATTS in sequence

INCLUDED:
Aluminum construction
Integrated Driver and Transformer - Linkable 3 wire system
Easily accessible ON/OFF switch
Joiner, 6" connecting cable and installation hardware included
1 x 10W LED

ACCESSORIES:
72" Extension cord with plug
Junction Box
24" or 48" Connecting Cable

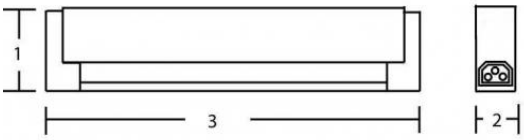

Technical information

CRI	80
Color Temperature	3000K
Voltage	120V
Watt	10W
Height (1)	1.25" (31.8 mm)
Width (2)	1" (25.4 mm)
Length (3)	24" (609.6 mm)
Light Output - Lumen	500
Warranty (Years)	3

Tel. : 514 695-8228 1 855 739-8228
Fax : 514 695-9009 1 855 812-9009



UNCL-3K-36AL

36" LED CUBE SERIES UNDERCABINET

Product codes

UNCL-3K-36AL : ALUMINUM

Aluminum construction
The LED CUBE Series is small, compact and linkable with easy connections using the joiner and connecting cable included. Ideal for use under cabinets, closets and work stations. Features a Polycarbonate Lens Cover.

LED (Light emitting Diode) offers lower energy consumption and longer life (40,000 hrs) over incandescent and fluorescent lighting. Color temperature: 3000 Kelvin. Non-Dimmable, Maximum of 100 WATTS in sequence

INCLUDED:
Aluminum construction
Integrated Driver and Transformer - Linkable 3 wire system
Easily accessible ON/OFF switch
Joiner, 6" connecting cable and installation hardware included
1 x 14W LED

ACCESSORIES:
72" Extension cord with plug
Junction Box
24" or 48" Connecting Cable

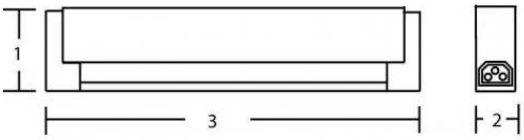

Technical information

CRI	80
Color Temperature	3000K
Voltage	120V
Watt	14W
Height (1)	1.25" (31.8 mm)
Width (2)	1" (25.4 mm)
Length (3)	36" (914.4 mm)
Light Output - Lumen	700
Warranty (Years)	3

Tel. : 514 695-8228 1 855 739-8228
Fax : 514 695-9009 1 855 812-9009



UNTL-14WH

14" LED SLIMLINE UNDERCABINET

Product codes

UNTL-14WH : WHITE

Aluminum construction

The LED Slimline Series is small, compact and linkable with easy connections using the joiner and connecting cable included. Ideal for use under cabinets, closets and work stations. Features a Polycarbonate Lens Cover.

LED (Light emitting Diode) offers lower energy consumption and longer life (40,000 hrs) over incandescent and fluorescent lighting. Color temperature: 3500 Kelvin.

Non-Dimmable, Maximum of 100 WATTS in sequence

INCLUDED:
Aluminum construction
Integrated Driver and Transformer - Linkable 3 wire system
Easily accessible ON/OFF switch
Joiner, 6" connecting cable and installation hardware included
1 X 2W LED Bulb

ACCESSORIES:
72" Extension cord with plug
Junction Box
24" or 48" Connecting Cable

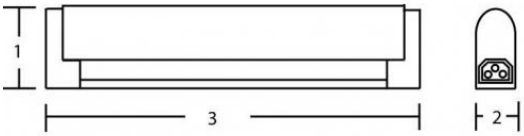

Technical information

Color Temperature	3500K
Light Output - Lumen	180
Height (1)	1.5" (38.1 mm)
Width (2)	1" (25.4 mm)
Length (3)	12.21" (310.1 mm)
Voltage	120V
Bulb	LED - DEL
Warranty (Years)	3

Tel. : 514 695-8228 1 855 739-8228
Fax : 514 695-9009 1 855 812-9009



UNTL-24WH

24" LED SLIMLINE UNDERCABINET

Product codes

UNTL-24WH : WHITE

Aluminum construction

The LED Slimline Series is small, compact and linkable with easy connections using the joiner and connecting cable included. Ideal for use under cabinets, closets and work stations. Features a Polycarbonate Lens Cover.

LED (Light emitting Diode) offers lower energy consumption and longer life (40,000 hrs) over incandescent and fluorescent lighting. Color temperature: 3500 Kelvin.

Non-Dimmable, Maximum of 100 WATTS in sequence

INCLUDED:
Aluminum construction
Integrated Driver and Transformer - Linkable 3 wire system
Easily accessible ON/OFF switch
Joiner, 6" connecting cable and installation hardware included
1 X 4W LED Bulb

ACCESSORIES:
72" Extension cord with plug
Junction Box
24" or 48" Connecting Cable

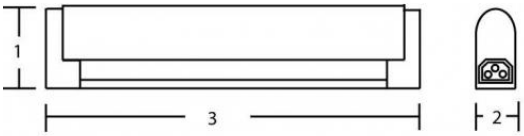

Technical information

Color Temperature	3500K
Light Output - Lumen	300
Height (1)	1.5" (38.1 mm)
Width (2)	1" (25.4 mm)
Length (3)	21.25" (539.8 mm)
Voltage	120V
Bulb	LED - DEL
Warranty (Years)	3

Tel. : 514 695-8228 1 855 739-8228
Fax : 514 695-9009 1 855 812-9009



UNTL-36WH

36" LED SLIMLINE UNDERCABINET

Product codes

UNTL-36WH : WHITE

Aluminum construction

The LED Slimline Series is small, compact and linkable with easy connections using the joiner and connecting cable included. Ideal for use under cabinets, closets and work stations. Features a Polycarbonate Lens Cover.

LED (Light emitting Diode) offers lower energy consumption and longer life (40,000 hrs) over incandescent and fluorescent lighting. Color temperature: 3500 Kelvin.

Non-Dimmable, Maximum of 100 WATTS in sequence

INCLUDED:
Aluminum construction
Integrated Driver and Transformer - Linkable 3 wire system
Easily accessible ON/OFF switch
Joiner, 6" connecting cable and installation hardware included
1 X 8W LED Bulb

ACCESSORIES:
72" Extension cord with plug
Junction Box
24" or 48" Connecting Cable

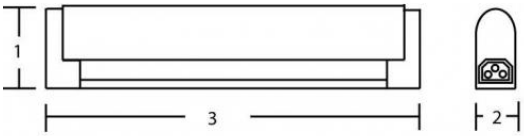

Technical information

Color Temperature	3500K
Light Output - Lumen	320
Height (1)	1.5" (38.1 mm)
Width (2)	1" (25.4 mm)
Length (3)	35" (889.0 mm)
Voltage	120V
Bulb	LED - DEL
Warranty (Years)	3

Tel. : 514 695-8228 1 855 739-8228
Fax : 514 695-9009 1 855 812-9009



UNL-8WH

8" LED SWIVEL UNDERCABINET

Product codes

UNL-8WH : WHITE

Aluminum construction - Hardwire Application Only

The LED Swivel Series is easy to install and also can be connected in series with the joiner which is included. Ideal for use under cabinets, closets and work stations.

Swivel feature allows lamp to be adjusted to prevent glare and direct light toward work area, where it is needed. Diffused, frosted glass allows for even light distribution.

LED (Light emitting Diode) offers lower energy consumption and longer life (40,000 hrs) over incandescent and fluorescent lighting. Color temperature: 3500 Kelvin.
Non-Dimmable, Maximum of 100 WATTS in sequence

INCLUDED:
Aluminum construction
Integrated Driver and Transformer
Easily accessible ON/OFF switch
Installation hardware
Knockouts provided for hardwire application
1 x 2W LED Bulb
ACCESSORIES:
Junction Box

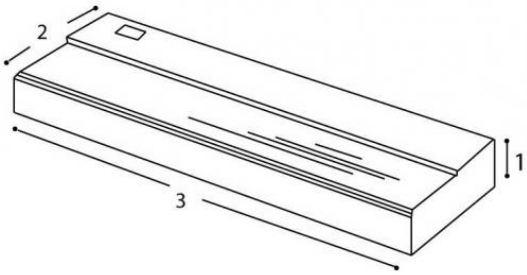

Technical information

Color Temperature	3500K
Light Output - Lumen	115
Height (1)	1.25" (31.8 mm)
Width (2)	3.625" (92.1 mm)
Length (3)	10" (254.0 mm)
Voltage	120V
Bulb	LED - DEL
Warranty (Years)	3



UNL-14WH

14" LED SWIVEL UNDERCABINET

Product codes

UNL-14WH : WHITE

Aluminum construction
The LED Swivel Series is easy to install and also can be connected in series with the joiner which is included. Ideal for use under cabinets, closets and work stations.

Swivel feature allows lamp to be adjusted to prevent glare and direct light toward work area, where it is needed. Diffused, frosted glass allows for even light distribution.

LED (Light emitting Diode) offers lower energy consumption and longer life (40,000 hrs) over incandescent and fluorescent lighting. Color temperature: 3500 Kelvin.
Non-Dimmable, Maximum of 100 WATTS in sequence

INCLUDED:
Aluminum construction
Integrated Driver and Transformer
Linkable 3 wire system - Easily accessible ON/OFF switch
Joiner, 6" connecting cable and installation hardware
Knockouts provided for hardwire application
1 x 4W LED Bulb
ACCESSORIES:
72" Extension cord with plug
Junction Box
24" or 48" Connecting Cable

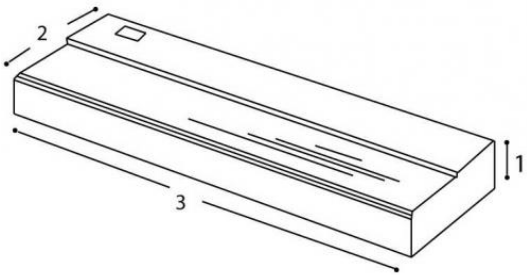

Technical information

Color Temperature	3500K
Light Output - Lumen	180
Height (1)	1.25" (31.8 mm)
Width (2)	3.6" (91.4 mm)
Length (3)	13.75" (349.3 mm)
Voltage	120V
Bulb	LED - DEL
Warranty (Years)	3

Tel. : 514 695-8228 1 855 739-8228
Fax : 514 695-9009 1 855 812-9009



UNL-24WH

24" LED SWIVEL UNDERCABINET

Product codes

UNL-24WH : WHITE

Aluminum construction
The LED Swivel Series is easy to install and also can be connected in series with the joiner which is included. Ideal for use under cabinets, closets and work stations.

Swivel feature allows lamp to be adjusted to prevent glare and direct light toward work area, where it is needed. Diffused, frosted glass allows for even light distribution.
LED (Light emitting Diode) offers lower energy consumption and longer life (40,000 hrs) over incandescent and fluorescent lighting. Color temperature: 3500 Kelvin.
Non-Dimmable, Maximum of 100 WATTS in sequence

INCLUDED:
Aluminum construction
Integrated Driver and Transformer
Linkable 3 wire system - Easily accessible ON/OFF switch
Joiner, 6" connecting cable and installation hardware
Knockouts provided for hardwire application
1 x 8W LED Bulb
ACCESSORIES:
72" Extension cord with plug
Junction Box
24" or 48" Connecting Cable

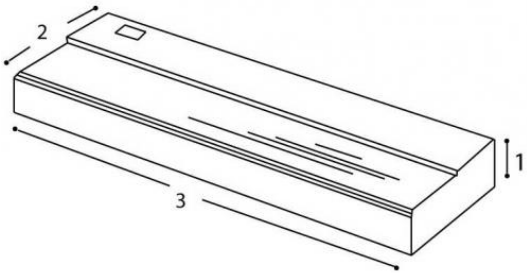

Technical information

Color Temperature	3500K
Light Output - Lumen	310
Height (1)	1.25" (31.8 mm)
Width (2)	3.6" (91.4 mm)
Length (3)	22.875" (581.0 mm)
Voltage	120V
Bulb	LED - DEL
Warranty (Years)	3

Tel. : 514 695-8228 1 855 739-8228
Fax : 514 695-9009 1 855 812-9009



UNTS-14WH

14" T5 FLUORESCENT SLIMLINE UNDERCABINET

Product codes

UNTS-14WH : WHITE

Aluminum construction

The T5 Fluorescent Slimline Series is small, compact and linkable with easy connections using the joiner and connecting cable included. Ideal for use under cabinets, closets and work stations. Features a Polycarbonate Lens Cover.

Lamp uses 1 x 8W T5 Fluorescent energy saving bulb (included) - 8000 hrs life
Fluorescent bulbs provide more efficient light, by emitting less heat than incandescent bulbs (non-dimmable)

Maximum of 200 WATTS in sequence

INCLUDED:
Aluminum construction
Integrated Ballast - Linkable 3 wire system - Easily accessible ON/OFF switch
Joiner, 6" connecting cable and installation hardware included
1 X 8W T5 Fluorescent Bulb

ACCESSORIES:
72" Extension cord with plug
Junction Box
24" or 48" Connecting Cable

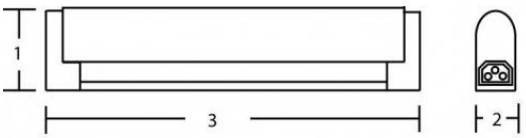

Technical information

Color Temperature	3500k
Light Output - Lumen	420
Height (1)	1.5" (38.1 mm)
Width (2)	1" (25.4 mm)
Length (3)	12.21" (310.1 mm)
Voltage	120V
Bulb	T5 Fluorescent 8W

Tel. : 514 695-8228 1 855 739-8228
Fax : 514 695-9009 1 855 812-9009



UNTS-24WH

24" T5 FLUORESCENT SLIMLINE UNDERCABINET

Product codes

UNTS-24WH : WHITE

Aluminum construction

The T5 Fluorescent Slimline Series is small, compact and linkable with easy connections using the joiner and connecting cable included. Ideal for use under cabinets, closets and work stations. Features a Polycarbonate Lens Cover.

Lamp uses 1 x 13W T5 Fluorescent energy saving bulb (included) - 8000 hrs life
Fluorescent bulbs provide more efficient light, by emitting less heat than incandescent bulbs (non-dimmable)

Maximum of 200 WATTS in sequence

INCLUDED:
Aluminum construction
Integrated Ballast - Linkable 3 wire system - Easily accessible ON/OFF switch
Joiner, 6" connecting cable and installation hardware included
1 X 13W T5 Fluorescent Bulb

ACCESSORIES:
72" Extension cord with plug
Junction Box
24" or 48" Connecting Cable

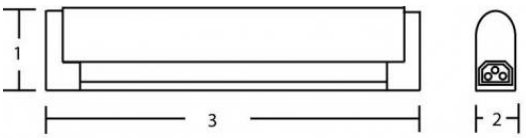

Technical information

Color Temperature	3500k
Light Output - Lumen	780
Height (1)	1.5" (38.1 mm)
Width (2)	1" (25.4 mm)
Length (3)	21.25" (539.8 mm)
Voltage	120V
Bulb	T5 Fluorescent 13W

Tel. : 514 695-8228 1 855 739-8228
Fax : 514 695-9009 1 855 812-9009



UNTS-36WH

36" T5 FLUORESCENT SLIMLINE UNDERCABINET

Product codes

UNTS-36WH : WHITE

Aluminum construction

The T5 Fluorescent Slimline Series is small, compact and linkable with easy connections using the joiner and connecting cable included. Ideal for use under cabinets, closets and work stations. Features a Polycarbonate Lens Cover.

Lamp uses 1 x 21W T5 Fluorescent energy saving bulb (included) - 8000 hrs life
Fluorescent bulbs provide more efficient light, by emitting less heat than incandescent bulbs (non-dimmable)

Maximum of 200 WATTS in sequence

INCLUDED:
Aluminum construction
Integrated Ballast - Linkable 3 wire system - Easily accessible ON/OFF switch
Joiner, 6" connecting cable and installation hardware included
1 X 21W T5 Fluorescent Bulb

ACCESSORIES:
72" Extension cord with plug
Junction Box
24" or 48" Connecting Cable

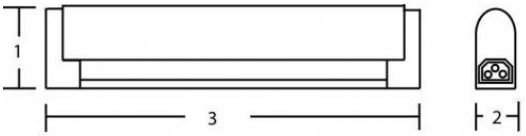

Technical information

Color Temperature	3500k
Light Output - Lumen	1900
Height (1)	1.5" (38.1 mm)
Width (2)	1" (25.4 mm)
Length (3)	34.25" (870.0 mm)
Voltage	120V
Bulb	T5 Fluorescent 21W

Tel. : 514 695-8228 1 855 739-8228
Fax : 514 695-9009 1 855 812-9009



UNTS-48WH

48" T5 FLUORESCENT SLIMLINE UNDERCABINET

Product codes

UNTS-48WH : WHITE

Aluminum construction

The T5 Fluorescent Slimline Series is small, compact and linkable with easy connections using the joiner and connecting cable included. Ideal for use under cabinets, closets and work stations. Features a Polycarbonate Lens Cover.

Lamp uses 1 x 28W T5 Fluorescent energy saving bulb (included) - 8000 hrs life
Fluorescent bulbs provide more efficient light, by emitting less heat than incandescent bulbs (non-dimmable)

Maximum of 200 WATTS in sequence

INCLUDED:
Aluminum construction
Integrated Ballast - Linkable 3 wire system - Easily accessible ON/OFF switch
Joiner, 6" connecting cable and installation hardware included
1 X 28W T5 Fluorescent Bulb

ACCESSORIES:
72" Extension cord with plug
Junction Box
24" or 48" Connecting Cable

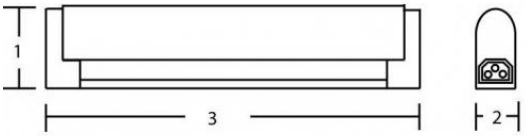

Technical information

Color Temperature	3500k
Light Output - Lumen	2900
Height (1)	1.5" (38.1 mm)
Width (2)	1" (25.4 mm)
Length (3)	46.0625" (1,170.0 mm)
Voltage	120V
Bulb	T5 Fluorescent 28W

Tel. : 514 695-8228 1 855 739-8228
Fax : 514 695-9009 1 855 812-9009



UNTS-60WH

60" T5 FLUORESCENT SLIMLINE UNDERCABINET

Product codes

UNTS-60WH : WHITE

Aluminum construction

The T5 Fluorescent Slimline Series is small, compact and linkable with easy connections using the joiner and connecting cable included. Ideal for use under cabinets, closets and work stations. Features a Polycarbonate Lens Cover.

Lamp uses 1 x 35W T5 Fluorescent energy saving bulb (included) - 8000 hrs life
Fluorescent bulbs provide more efficient light, by emitting less heat than incandescent bulbs (non-dimmable)

Maximum of 200 WATTS in sequence

INCLUDED:
Aluminum construction
Integrated Ballast - Linkable 3 wire system - Easily accessible ON/OFF switch
Joiner, 6" connecting cable and installation hardware included
1 X 35W T5 Fluorescent Bulb

ACCESSORIES:
72" Extension cord with plug
Junction Box
24" or 48" Connecting Cable

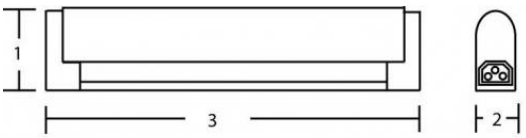

Technical information

Color Temperature	3500k
Light Output - Lumen	3500
Height (1)	1.5" (38.1 mm)
Width (2)	1" (25.4 mm)
Length (3)	57.875" (1,470.0 mm)
Voltage	120V
Bulb	T5 Fluorescent 35W

Tel. : 514 695-8228 1 855 739-8228
Fax : 514 695-9009 1 855 812-9009

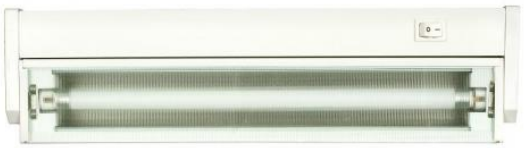

UNT5-14

14" T5 FLUORESCENT SWIVEL UNDERCABINET

Product codes

UNT5-14WH : WHITE

UNT5-14BS : BRUSHED STEEL

Aluminum construction
The T5 Fluorescent Swivel Series is easy to install and also can be connected in series with the joiner which is included. Ideal for use under cabinets, closets and work stations.

Swivel feature allows lamp to be adjusted to prevent glare and to direct light towards the work area, where it is needed. Diffused and frosted glass allows for even light distribution.
Lamp uses 1 x 8W T5 Fluorescent energy saving bulb (included) - 8000 hrs life
Fluorescent bulbs provide more efficient light, by emitting less heat than incandescent bulbs (non-dimmable)
Maximum of 200 WATTS in sequence

INCLUDED:
Aluminum construction
Integrated Ballast - Linkable 3 wire system - Easily accessible ON/OFF switch
Joiner, 6" connecting cable and installation hardware included
Knockouts provided for hardwire application
1 X 8W T5 Fluorescent Bulb
ACCESSORIES:
72" Extension cord with plug
Junction Box
24" or 48" Connecting Cable

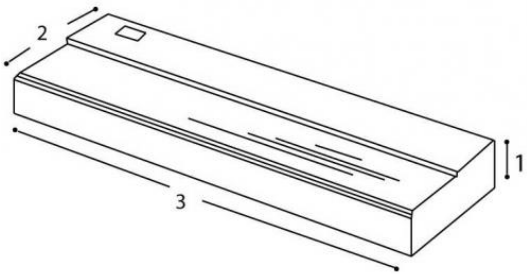

Technical information

Color Temperature	3500k
Light Output - Lumen	420
Height (1)	1.25" (31.8 mm)
Width (2)	3.625" (92.1 mm)
Length (3)	13.75" (349.3 mm)
Voltage	120V
Bulb	T5 Fluorescent 8W

Tel. : 514 695-8228 1 855 739-8228
Fax : 514 695-9009 1 855 812-9009

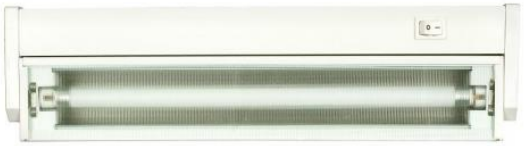

UNT5-24

24" T5 FLUORESCENT SWIVEL UNDERCABINET

Product codes

UNT5-24WH : WHITE

UNT5-24BS : BRUSHED STEEL

Aluminum construction
The T5 Fluorescent Swivel Series is easy to install and also can be connected in series with the joiner which is included. Ideal for use under cabinets, closets and work stations.

Swivel feature allows lamp to be adjusted to prevent glare and to direct light towards the work area, where it is needed. Diffused and frosted glass allows for even light distribution. Lamp uses 1 x 13W T5 Fluorescent energy saving bulb (included) - 8000 hrs life
Fluorescent bulbs provide more efficient light, by emitting less heat than incandescent bulbs (non-dimmable)
Maximum of 200 WATTS in sequence

INCLUDED:
Aluminum construction
Integrated Ballast - Linkable 3 wire system - Easily accessible ON/OFF switch
Joiner, 6" connecting cable and installation hardware included
Knockouts provided for hardwire application
1 X 13W T5 Fluorescent Bulb
ACCESSORIES:
72" Extension cord with plug
Junction Box
24" or 48" Connecting Cable

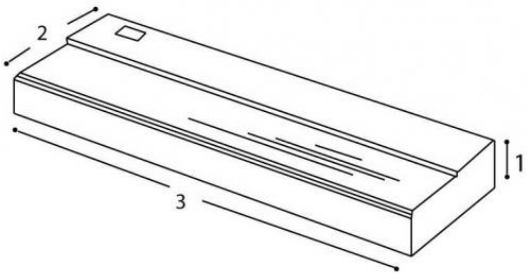

Technical information

Color Temperature	3500k
Light Output - Lumen	780
Height (1)	1.25" (31.8 mm)
Width (2)	3.625" (92.1 mm)
Length (3)	22.875" (581.0 mm)
Voltage	120V
Bulb	T5 Fluorescent 13W

Tel. : 514 695-8228 1 855 739-8228
Fax : 514 695-9009 1 855 812-9009



UNT5-36

36" T5 FLUORESCENT SWIVEL UNDERCABINET

Product codes

UNT5-36BS : BRUSHED STEEL
UNT5-36WH : WHITE

Aluminum construction
The T5 Fluorescent Swivel Series is easy to install and also can be connected in series with the joiner which is included. Ideal for use under cabinets, closets and work stations.

Swivel feature allows lamp to be adjusted to prevent glare and to direct light towards the work area, where it is needed. Diffused and frosted glass allows for even light distribution. Lamp uses 1 x 21W T5 Fluorescent energy saving bulb (included) - 8000 hrs life

Fluorescent bulbs provide more efficient light, by emitting less heat than incandescent bulbs (non-dimmable)
Maximum of 200 WATTS in sequence

INCLUDED:
Aluminum construction
Integrated Ballast - Linkable 3 wire system - Easily accessible ON/OFF switch
Joiner, 6" connecting cable and installation hardware included
Knockouts provided for hardwire application
1 X 21W T5 Fluorescent Bulb
ACCESSORIES:
72" Extension cord with plug
Junction Box
24" or 48" Connecting Cable

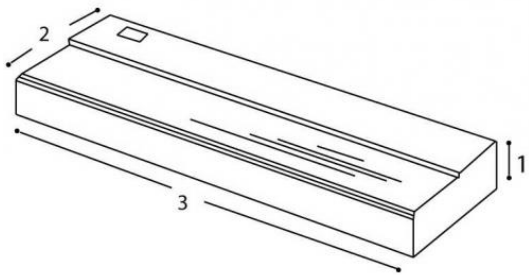

Technical information

Color Temperature	3500k
Light Output - Lumen	1900
Height (1)	1.25" (31.8 mm)
Width (2)	3.625" (92.1 mm)
Length (3)	35.75" (908.1 mm)
Voltage	120V
Bulb	T5 Fluorescent 21W

Tel. : 514 695-8228 1 855 739-8228
Fax : 514 695-9009 1 855 812-9009



UNT5-48

48" T5 FLUORESCENT SWIVEL UNDERCABINET

Product codes

UNT5-48WH : WHITE

Aluminum construction
The T5 Fluorescent Swivel Series is easy to install and also can be connected in series with the joiner which is included. Ideal for use under cabinets, closets and work stations.

Swivel feature allows lamp to be adjusted to prevent glare and to direct light towards the work area, where it is needed. Diffused and frosted glass allows for even light distribution. Lamp uses 1 x 28W T5 Fluorescent energy saving bulb (included) - 8000 hrs life

Fluorescent bulbs provide more efficient light, by emitting less heat than incandescent bulbs (non-dimmable)
Maximum of 200 WATTS in sequence

INCLUDED:
Aluminum construction
Integrated Ballast - Linkable 3 wire system - Easily accessible ON/OFF switch
Joiner, 6" connecting cable and installation hardware included
Knockouts provided for hardwire application
1 X 28W T5 Fluorescent Bulb
ACCESSORIES:
72" Extension cord with plug
Junction Box
24" or 48" Connecting Cable

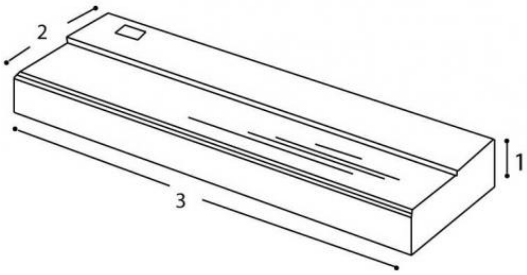

Technical information

Color Temperature	3500k
Light Output - Lumen	2900
Height (1)	1.25" (31.8 mm)
Width (2)	3.625" (92.1 mm)
Length (3)	47.75" (1,212.9 mm)
Voltage	120V
Bulb	T5 Fluorescent 28W

Tel. : 514 695-8228 1 855 739-8228
Fax : 514 695-9009 1 855 812-9009



UNNTS-14WH-NS

14" T5 FLUORESCENT - HARDWIRE

APPLICATION

Product codes

UNNTS-14WH-NS : WHITE

Aluminum construction

This series is designed for Hardwire application ONLY, knockouts provided.

Affordable undercabinet solution ideal for use under cabinets, closets and work stations.

Lamp uses 1 x 8W T5 Fluorescent energy saving bulb (included) - 8000 hrs life
Fluorescent bulbs provide more efficient light, by emitting less heat than incandescent bulbs
Maximum of 200 WATTS in sequence.

INCLUDED
Aluminum construction - Integrated ballast
Polycarbonate Lens Cover
1 x 8W Fluorescent Bulb

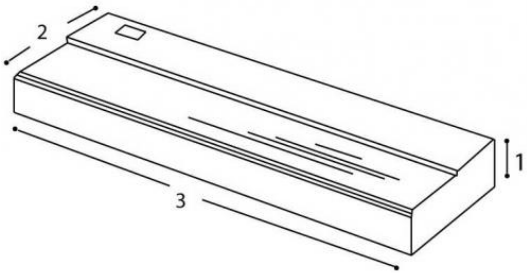

Technical information

Color Temperature	3500k
Light Output - Lumen	420
Height (1)	1.0625" (27.0 mm)
Width (2)	2.5625" (65.1 mm)
Length (3)	12.875" (327.0 mm)
Voltage	120V
Bulb	T5 Fluorescent 8W

Tel. : 514 695-8228 1 855 739-8228
Fax : 514 695-9009 1 855 812-9009



UNNTS-24WH-NS

24" T5 FLUORESCENT - HARDWIRE

APPLICATION

Product codes

UNNTS-24WH-NS : WHITE

Aluminum construction

This series is designed for Hardwire application ONLY, knockouts provided.

Affordable undercabinet solution ideal for use under cabinets, closets and work stations.

Lamp uses 1 x 13W T5 Fluorescent energy saving bulb (included) - 8000 hrs life
Fluorescent bulbs provide more efficient light, by emitting less heat than incandescent bulbs
Maximum of 200 WATTS in sequence.

INCLUDED:
Aluminum construction - Integrated ballast
Polycarbonate lens cover
1 X 13W Fluorescent Bulb

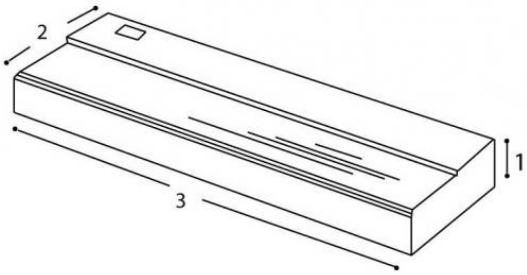

Technical information

Color Temperature	3500k
Light Output - Lumen	780
Height (1)	1" (25.4 mm)
Width (2)	2.5" (63.5 mm)
Length (3)	21.75" (552.5 mm)
Voltage	120V
Bulb	T5 Fluorescent 13W

Tel. : 514 695-8228 1 855 739-8228
Fax : 514 695-9009 1 855 812-9009



UNX20-8WH

8" XENON SWIVEL UNDERCABINET

Product codes

UNX20-8WH : WHITE

Aluminum construction - Hardwire Application Only

Xenon lamp technology provides excellent light, a warmer colour, lasts longer and runs cooler than regular Halogen.

Dimmable features also adds to longer life of bulb. Lamp uses 1 x 20W Xenon bulb (included) - 2000 hrs life

Swivel feature allows lamp to be adjusted to prevent glare and direct light toward work area, where it is most needed. Diffused, frosted glass allows for even light distribution

Ideal for use under cabinets, closets and work stations
Maximum of 550 WATTS in sequence

INCLUDED:
Aluminum construction
Easily accessible HIGH/LOW/OFF switch
Integrated transformer
Installation hardware
Knockouts provided for hardwire application
1 X 20W XENON Bulb
ACCESSORIES:
Junction Box

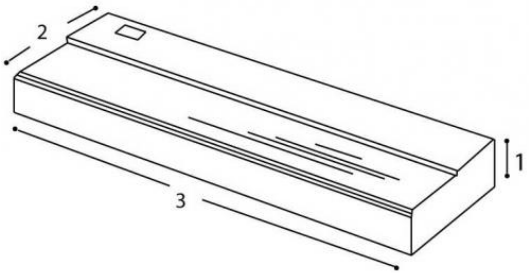

Technical information

Height (1)	1.25" (31.8 mm)
Width (2)	3.625" (92.1 mm)
Length (3)	7.875" (200.0 mm)
Voltage	120V
Bulb	20W G4 Bi-Pin Base - T3 J

Tel. : 514 695-8228 1 855 739-8228
Fax : 514 695-9009 1 855 812-9009

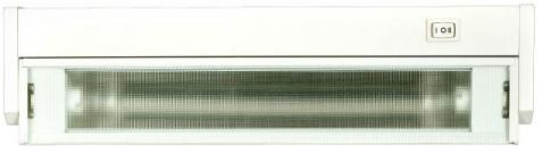

UNX20-14WH

14" XENON SWIVEL UNDERCABINET

Product codes

UNX20-14WH : WHITE

Aluminum construction

Xenon lamp technology provides excellent light, a warmer colour, lasts longer and runs cooler than regular Halogen.

Dimmable features also adds to longer life of bulb. Lamp uses 2 x 20W Xenon bulb (included) - 2000 hrs life

Swivel feature allows lamp to be adjusted to prevent glare and direct light toward work area, where it is most needed. Diffused, frosted glass allows for even light distribution

Ideal for use under cabinets, closets and work stations
Maximum of 200 WATTS in sequence

INCLUDED:
Aluminum construction
Easily accessible HIGH/LOW/OFF switch
Integrated transformer - Linkable 3 wire system
Installation hardware
Knockouts provided for hardwire application
2 X 20W XENON Bulb
ACCESSORIES:
72" Extension cord with plug
Junction Box
24" or 48" Connecting Cable

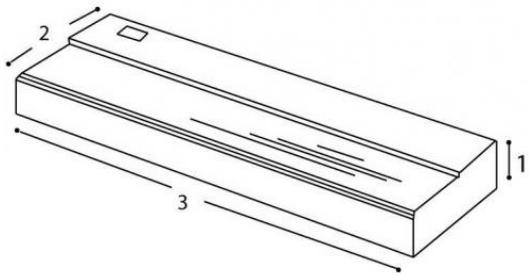

Technical information

Height (1)	1.25" (31.8 mm)
Width (2)	3.625" (92.1 mm)
Length (3)	13.75" (349.3 mm)
Voltage	120V
Bulb	20W G4 Bi-Pin Base - T3 J

Tel. : 514 695-8228 1 855 739-8228
Fax : 514 695-9009 1 855 812-9009

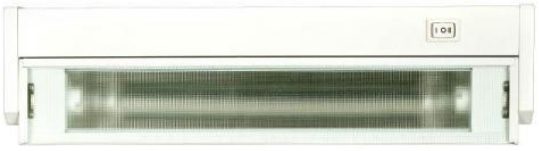

UNX20-24WH

24" XENON SWIVEL UNDERCABINET

Product codes

UNX20-24WH : WHITE

Aluminum construction

Xenon lamp technology provides excellent light, a warmer colour, lasts longer and runs cooler than regular Halogen.

Dimmable features also adds to longer life of bulb. Lamp uses 3 x 20W Xenon bulb (included) - 2000 hrs life

Swivel feature allows lamp to be adjusted to prevent glare and direct light toward work area, where it is most needed. Diffused, frosted glass allows for even light distribution

Ideal for use under cabinets, closets and work stations
Maximum of 200 WATTS in sequence

INCLUDED:
Aluminum construction
Easily accessible HIGH/LOW/OFF switch
Integrated transformer - Linkable 3 wire system
Installation hardware
Knockouts provided for hardwire application
3 X 20W XENON Bulb
ACCESSORIES:
72" Extension cord with plug
Junction Box
24" or 48" Connecting Cable

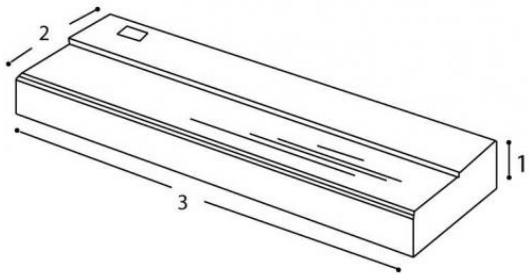

Technical information

Height (1)	1.25" (31.8 mm)
Width (2)	3.625" (92.1 mm)
Length (3)	22.875" (581.0 mm)
Voltage	120V
Bulb	20W G4 Bi-Pin Base - T3 J

Tel. : 514 695-8228 1 855 739-8228
Fax : 514 695-9009 1 855 812-9009



UNPL100-1

LED PUCK LIGHT

Product codes

UNPL100-WH-1 : WHITE

LED (Light Emitting Diode) offers low energy consumption and long life over incandescent and flluorescent lighting. Ideal use for these units may include under kitchen cabinets and work stations.

Individual LED pucks are rated for 40,000 hours of life.
Puck lights feature a daisy chain connection system, allowing for quick and easy installations.

The LED pucks can either be surface or recessed mounted and is available in a white finish.

Requires either a plug-indriver (# UNDPL-10W-WH) or hardwire box (# to be determined) for installation.

Technical Specifications:

Watts: 1 watt LED chip
Limited warranty: 3 years
Dimmable with 5V dimmer, UNDIMPL-5V-WH

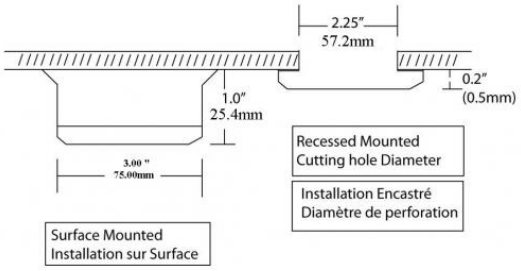

Technical information

Light Output - Lumen	85
Color Temperature	3500K
CRI	80
Diameter	3" (76.2 mm)
Height	1" (25.4 mm)
Voltage	5V
Bulb	LED, DEL 1 watt
Warranty (Years)	3

Tel. : 514 695-8228 1 855 739-8228
Fax : 514 695-9009 1 855 812-9009



UNPL100-3

LED PUCK LIGHT - 3 PUCK KIT

Product codes

UNPL100-WH-3 : WHITE

LED undercabinet puck light kit includes:

3 LED puck lights, 10W in-line transformer, wiring hub, on/off switch and mounting hardware.

LED (Light Emitting Diode) offers low energy consumption and long life over incandescent and flluorescent lighting. Ideal use for these units may include under kitchen cabinets and work stations.

Each LED is rated for 40,000 hours of life.
Transformer includes a 60" power cord, and will run up to a maximum of 8 pucks.
Puck lights feature a daisy chain connection system, allowing for easy and quick installations.

The LED pucks can either be surface or recessed mounted and is available in a white finish.

Technical Specifications:

Watts: 3x 1watt LED chip
Limited Warranty: 3 years
Dimmable with 5V dimmer, UNDIMPL-5V-WH

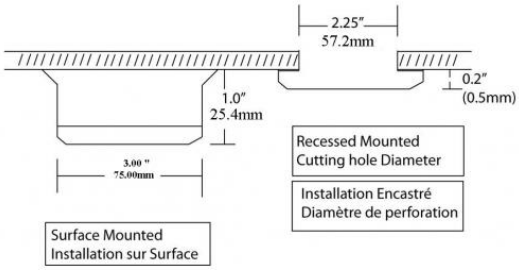

Technical information

Light Output - Lumen	255
CRI	80
Color Temperature	3500K
Diameter	3" (7.62 cm)
Height	1" (2.54 cm)
Voltage	5V
Bulb	LED, DEL 1 watt
Warranty (Years)	3

Tel. : 514 695-8228 1 855 739-8228
Fax : 514 695-9009 1 855 812-9009



M503

XENON PUCK LIGHT - 12V

Product codes

M503-BS : BRUSHED STEEL

M503-WH : WHITE

Aluminum construction

Xenon lamp technology provides excellent light, a warmer colour, lasts longer and runs cooler than regular Halogen.

Dimmable feature adds to longer life of bulb. Uses low voltage 20W Xenon bulb (included) - 2000 hrs. life

Ideal for use under cabinets, closets and work stations

Can be recessed or surface mounted, hardwired or plugged directly into an outlet

Aluminum construction - Linkable 3 wire system

INCLUDED:
12V - 20W XENON Bulb
Connecting Cable and installation hardware

REQUIRED FOR INSTALLATION:
60W low voltage transformer (NDR #7660) - Maximum 3 units per transformer

ACCESSORIES:
39" Connecting Cable

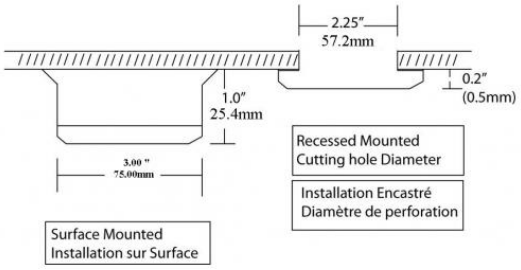

Technical information

Diameter	3" (76.2 mm)
Bulb	20W G4 Bi-Pin Base - T3 J

Tel. : 514 695-8228 1 855 739-8228
Fax : 514 695-9009 1 855 812-9009



JOINUNL-24

24" CONNECTING CABLE - SLEEK LED SERIES

Product codes

JOINUNL-24 : BLACK

Connecting Cable for use exclusively with the LED "SLEEK" series undercabinet products.

The 24" Cable allows for greater flexibility in designing custom layout needs.

color: BLACK

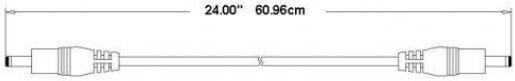

Technical information

Length	24" (60.96 cm)
Voltage	12V

Tel. : 514 695-8228 1 855 739-8228
Fax : 514 695-9009 1 855 812-9009



JOINUNL-48

48" CONNECTING CABLE - SLEEK LED SERIES

Product codes

JOINUNL-48 : BLACK

Connecting Cable for use exclusively with the LED "SLEEK" series undercabinet products.

The 48" Cable allows for greater flexibility in designing custom layout needs.

color: BLACK

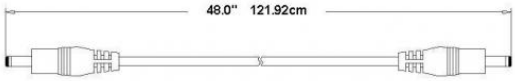

Technical information

Length	48" (121.92 cm)
Voltage	12V

Tel. : 514 695-8228 1 855 739-8228
Fax : 514 695-9009 1 855 812-9009



UNLPLG-18WBLK

18W Plug-In Power Supply -SLEEK LED Series

Product codes

UNLPLG-18WBLK : BLACK

18 watt plug-in driver for use with the under cabinet LED SLEEK series. (UNSLK-35K)

The driver includes a 60" power cord, and will run up to a maximum of 18 watts of LED Sleek series under cabinet products.

Color: Black



Technical information

Height	2.25" (57.2 mm)
Width	1.75" (44.5 mm)
Length	2.75" (69.9 mm)
Voltage	12V

Tel. : 514 695-8228 1 855 739-8228
Fax : 514 695-9009 1 855 812-9009



UNLPLG-36WBLK

36W Plug-In Power Supply -SLEEK LED Series

Product codes

UNLPLG-36WBLK : BLACK

36 watt plug-in driver for use with the under cabinet LED SLEEK series. (UNSLK-35K)

The driver includes a 60" power cord, and will run up to a maximum of 36 watts of LED Sleek series under cabinet products.

Color: Black

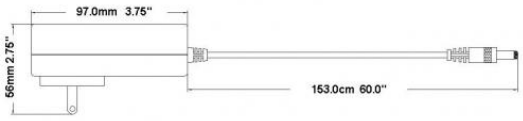

Technical information

Height	2.25" (57.2 mm)
Width	1.75" (44.5 mm)
Length	3.75" (95.3 mm)
Voltage	12V

Tel. : 514 695-8228 1 855 739-8228
Fax : 514 695-9009 1 855 812-9009



UNDIML-12V-BLK

LED DIMMER - SLEEK PREMIUM SERIES

Product codes

UNDIML-12V-BLK : BLACK

12V in-line dimmer for use with the PREMIUM SERIES LED under cabinet series.(UNSLK-35K).

The dimmer includes an ON/OFF rotary dimmer switch, which allows under cabinet lighting to be dimmed to any level of lighting required.

Includes a 60" (150cm) lead connecting cable, which permits installation and placement of the dimmer unit in desired location.

Color: BLACK

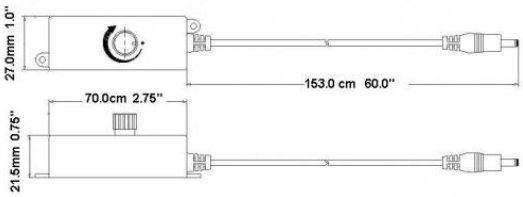

Technical information	
Height	0.75" (19.1 mm)
Width	1.1" (27.9 mm)
Length	2.75" (69.9 mm)
Voltage	12V

Tel. : 514 695-8228 1 855 739-8228
Fax : 514 695-9009 1 855 812-9009



HBOX-UNL

45W LED HARDWIRE BOX - SLEEK SERIES

Product codes

HBOX-UNL : BLACK

This hardwire box is design to be used with the LED SLEEK SERIES. It offers three (3) knockout locations and “Quick Connect” wire connectors for easy and quick installations. It will run up to 45 watts of LED Sleek under cabinet product.

This hardwire box is non-dimmable.

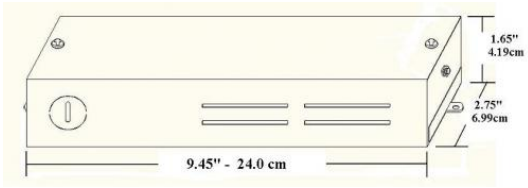

Technical information

Height	1.65" (4.19 cm)
Width	2.75" (6.99 cm)
Length	9.45" (24.00 cm)

Tel. : 514 695-8228 1 855 739-8228
Fax : 514 695-9009 1 855 812-9009



PLG-UN

72" CORD with PLUG for "SWIVEL" & "SLIMLINE" Serie

Product codes

PLG-UN : WHITE

Power cord with plug for use with NDR Electric "3-wire" undercabinet Series Slimline & Swivel products (excluding Series M503 Puck Light)

72" length allows for greater flexibility and ease of installation

3-Prong Polarized Plug

WHITE

Technical information

Length	72" (182.88 cm)

Tel. : 514 695-8228 1 855 739-8228
Fax : 514 695-9009 1 855 812-9009



JBOX-NS

JUNCTION BOX - NO SWITCH

For use with NDR Electric "3-wire" system undercabinet SWIVEL SERIES.
(UNT5, UNL and UNX20 SERIES)

This junction box allows for a quick and effiecient hardwire installation. Once wired into the box, unit is then plugged into the undercabinet unit being intalled.

Knockouts provided for hardwire applications

NO ON/OFF Switch

WHITE

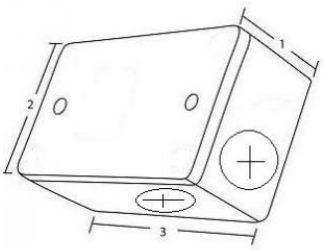

Technical information

Height (1)	1.25" (31.8 mm)
Width (2)	2" (50.8 mm)
Length (3)	2.75" (69.9 mm)

Tel. : 514 695-8228 1 855 739-8228
Fax : 514 695-9009 1 855 812-9009



JBOX-UN

JUNCTION BOX

Product codes

JBOX-UN : WHITE

For use with NDR Electric "3-wire" system undercabinet products, "Slimline" and swivel series. (excluding Series M503 Puck Light)

Knockouts provided for hardwire applications

Integrated ON/OFF Switch

WHITE

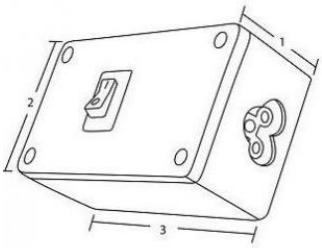

Technical information

Height (1)	1.375" (34.9 mm)
Width (2)	1.8" (45.7 mm)
Length (3)	3.5" (88.9 mm)

Tel. : 514 695-8228 1 855 739-8228
Fax : 514 695-9009 1 855 812-9009

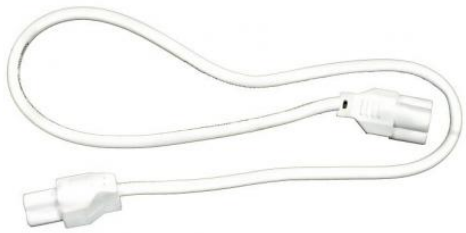

JOIN24-UN

24" CONNECTING CABLE

Product codes

JOIN24-UN : WHITE

Connecting Cable for use with NDR Electric "3-wire" system undercabinet products (excluding Series M503 Puck Light)

24" Cable allows for greater flexibility in designing custom layout needs

WHITE

Technical information

Length	24" (60.96 cm)

Tel. : 514 695-8228 1 855 739-8228
Fax : 514 695-9009 1 855 812-9009



JOIN48-UN

48" CONNECTING CABLE

Product codes

JOIN48-UN : WHITE

Connecting Cable for use with NDR Electric "3-wire" system undercabinet products (excluding Series M503 Puck Light)

48" Cable allows for greater flexibility in designing custom layout needs

WHITE

Technical information

Length	48" (121.92 cm)

Tel. : 514 695-8228 1 855 739-8228
Fax : 514 695-9009 1 855 812-9009



JOINPL36-UN

36" CONNECTING CABLE for LED PUCK LIGHT SERIES

Product codes

JOINPL36-WH :

Connecting Cable for use with the LED puck collections (UNPL100-1 & UNPL100-3) exclusively.

The 36" cable allows for greater flexibility in designing custom layout needs

color: clear

Technical information

Length	36" (91.44 cm)

Tel. : 514 695-8228 1 855 739-8228
Fax : 514 695-9009 1 855 812-9009



UNDPL-10W-WH

PLUG-IN POWER SUPPLY for LED PUCK SERIES

Product codes

UNDPL-10W-WH : WHITE

10 watt plug-in driver for use with the LED pucks (UNPL series).

The driver includes a 60" power cord, and will run up to 8 LED pucks.

Color: White

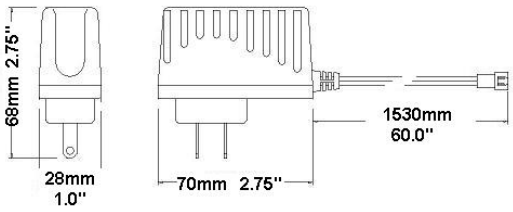

Technical information

Watt	10
Height	2.75" (69.9 mm)
Width	1.1" (27.9 mm)
Length	2.75" (69.9 mm)
Voltage	5V

Tel. : 514 695-8228 1 855 739-8228
Fax : 514 695-9009 1 855 812-9009



UNDIMPL-5V-WH

DIMMER for LED PUCK LIGHT SERIES

Product codes

UNDIMPL-5V-WH : WHITE

5V in-line dimmer for use with LED puck light series UNPL100.

It includes an ON/OFF rotary dimmer switch.
Daisy chain connectors allow for easy and quick installation.

Color: White

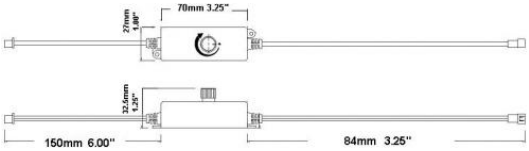

Technical information	
Voltage	5V
Height	0.85" (21.6 mm)
Width	1.06" (26.9 mm)
Length	2.75" (69.9 mm)

Tel. : 514 695-8228 1 855 739-8228
Fax : 514 695-9009 1 855 812-9009



HBOX-UNPL

10W LED HARDWIRE BOX - PUCK LIGHT SERIES

Product codes

HBOX-UNPL : WHITE

This hardwire box is design to be used with the LED puck light series. It offers three (3) knockout locations and “Quick Connect” wire connectors for easy and quick installations. It will run up to eight (8) pucks.

This hardwire box is non-dimmable

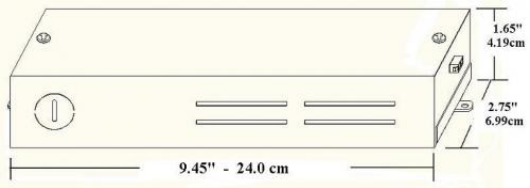

Technical information

Height	1.65" (4.19 cm)
Width	2.75" (6.99 cm)
Length	9.45" (24.00 cm)

Tel. : 514 695-8228 1 855 739-8228
Fax : 514 695-9009 1 855 812-9009



7510

39" CONNECTING CABLE (Xenon Puck Light)

Product codes

7510 : WHITE

For use with NDR Electric "3-wire" system undercabinet Series M503 Puck Light

Cable allows for greater flexibility in designing custom layout needs

Technical information

Length	39" (99.06 cm)

Tel. : 514 695-8228 1 855 739-8228
Fax : 514 695-9009 1 855 812-9009



7660

LOW VOLTAGE TRANSFORMER - 60W (Xenon Puck Light)

Product codes

7660 : WHITE

Low voltage transformer exclusively for use with NDR Series M503 Puck Light "3-wire" system.

A maximum of 3 puck lights may be installed per transformer

Technical information

Tel. : 514 695-8228 1 855 739-8228
Fax : 514 695-9009 1 855 812-9009



T8 LED - DEL

T8 - LED

Product codes

LED-T8-48-18W-40K : 4000K

This replacement LED T8 TUBE is offered with a built-in driver. It is the same T8 bulb offered in our SHOP LIGHT. SL2-LED48-40K-WH

This unit is also well adapted to be installed in other T8 style lighting units, however those units must NOT have ballasts installed. In other words, these LED T8 tubes require 120 volt directly to the sockets.

The tubes have a shatter resistant coating applied, for safety and security.

The tube has a life span of 25,000 hours, 18 watts, 1500 lumens, 4000k color temperature and carry a 3 year limited warranty.

Technical information

Bulb	T8 LED / DEL
Length	48" (1,219.2 mm)
Bulb Life	25000 hrs
Color Temperature	4000k
Light Output - Lumen	1500LM
CRI	>80
Warranty (Years)	3
Watt	18W
Voltage	120V

Tel. : 514 695-8228 1 855 739-8228
Fax : 514 695-9009 1 855 812-9009



PAR16

PAR16 - HALOGEN

Product codes

MRE26-35W : 35W
MRE26-50W : 50W

Technical information

Base	E26
Beam Spread	Flood, 30°
Bulb Life	2000 hrs
Bulb Wattage	35W - 50W
Dimmable	Y
Light Output - Lumen	380LM - 35W
Light Output - Lumen	572LM - 50W
Voltage	120V
Warranty (Years)	1

Tel. : 514 695-8228 1 855 739-8228
Fax : 514 695-9009 1 855 812-9009



A19 LED - DEL

A19 - LED BULB

Product codes

LED-A19-11W-27K : 2700K
LED-A19-11W-4K : 4000K

AVAILABLE DECEMBER 2015

Technical information

Base	E26
Beam Spread	285°
Bulb Life	25000 hrs
Bulb Wattage	11W
Color Temperature	2700k - 4000k
CRI	>80
Dimmable	Y
Light Output - Lumen	806LM
Recommended Dimmer	Leviton IPL06-LZ
Recommended Dimmer	Leviton 6674
Voltage	120V
Warranty (Years)	5



PAR20 LED-DEL

PAR20 - LED BULB

Product codes

LED-PAR20-7W-3K : 3000K
LED-PAR20-7W-4K : 4000K

Technical information

Base	E26
Beam Spread	Flood, 40°
Bulb Life	25000 hrs
Bulb Wattage	7W
Color Temperature	3000k / 4000k
CRI	>90
Dimmable	Y
Light Output - Lumen	525LM
Recommended Dimmer	Leviton IPL06-LZ
Recommended Dimmer	Leviton 6674
Voltage	120V
Warranty (Years)	5

Tel. : 514 695-8228 1 855 739-8228
Fax : 514 695-9009 1 855 812-9009



BR30 LED-DEL

BR30 LED BULB

Product codes

LED-BR30-11W-3K : 3000K

Technical information

Base	E26
Beam Spread	100°
Bulb Life	25000 hrs
Bulb Wattage	11W
Color Temperature	3000k
CRI	>90
Dimmable	Y
Light Output - Lumen	750LM
Recommended Dimmer	Leviton IPL06-LZ
Recommended Dimmer	Leviton 6674
Voltage	120V
Warranty (Years)	5

Tel. : 514 695-8228 1 855 739-8228
Fax : 514 695-9009 1 855 812-9009



PAR30 LED-DEL

PAR30 - LED BULB with LONG NECK

Product codes

LEDPAR30LN-13W-3K : 3000K
LEDPAR30LN-13W-4K : 4000K

Technical information

Base	E26
Beam Spread	Flood, 40°
Bulb Life	25000 hrs
Bulb Wattage	13W
Color Temperature	3000k / 4000k
CRI	>90
Dimmable	Y
Light Output - Lumen	1000LM
Recommended Dimmer	Leviton IPL06-LZ
Recommended Dimmer	Leviton 6674
Voltage	120V
Warranty (Years)	5

Tel. : 514 695-8228 1 855 739-8228
Fax : 514 695-9009 1 855 812-9009



PAR30LN-75W

PAR30 - HALOGEN BULB with LONG NECK

Product codes

PAR30LN-75W : 75W

Technical information

Base	E26
Beam Spread	Flood, 35°
Bulb Life	2000 hrs
Bulb Wattage	75W
Dimmable	Y
Light Output - Lumen	860LM
Voltage	120V
Warranty (Years)	1

Tel. : 514 695-8228 1 855 739-8228
Fax : 514 695-9009 1 855 812-9009



GU10-50

GU10 HALOGEN BULB

Product codes

GU10-50W : 50 WATTS

Technical information

Base	GU10
Beam Spread	30°
Bulb Life	2500 hrs
Bulb	50W
Dimmable	Y
Light Output - Lumen	650LM
Voltage	120V
Warranty (Years)	1

Tel. : 514 695-8228 1 855 739-8228
Fax : 514 695-9009 1 855 812-9009



GU10 LED - DEL

GU10 LED BULB

Product codes

LED-GU10-6.5W-3K : 3000K

Technical information

Base	GU10
Beam Spread	FLOOD, 32°
Bulb Life	25000 hrs
Bulb Wattage	6.5W
Color Temperature	3000k
CRI	>90
Dimmable	Y
Light Output - Lumen	550LM
Recommended Dimmer	Leviton IPL06-LZ
Recommended Dimmer	Leviton 6674
Voltage	120V
Warranty (Years)	5

Tel. : 514 695-8228 1 855 739-8228
Fax : 514 695-9009 1 855 812-9009



MR16

MR16 HALOGEN BULB

Product codes

MR16-35W : 35 WATTS
MR16-50W : 50 WATTS

Technical information

Base	BI-BIN, GU5.3
Beam Spread	Flood, 30°
Bulb Life	2000 hrs
Bulb Wattage	35W - 50W
Dimmable	Y
Light Output - Lumen	35W - 400LM
Light Output - Lumen	50W - 700LM
Voltage	120V
Warranty (Years)	1

Tel. : 514 695-8228 1 855 739-8228
Fax : 514 695-9009 1 855 812-9009



PAR16 LED-DEL

PAR16 - LED BULB

Product codes

LED-PAR16-6.5W-3K : 3000K

Technical information

Base	E26
Beam Spread	FLOOD, 32°
Bulb Life	25000 hrs
Bulb Wattage	6.5W
Color Temperature	3000k
CRI	>90
Dimmable	Y
Light Output - Lumen	550LM
Recommended Dimmer	Leviton IPL06-LZ
Recommended Dimmer	Leviton 6674
Voltage	120V
Warranty (Years)	5

Tel. : 514 695-8228 1 855 739-8228
Fax : 514 695-9009 1 855 812-9009



PAR20

PAR20 - HALOGEN BULB

Product codes

PAR20-39W : 39 WATTS

Technical information

Base	E26
Beam Spread	Flood, 30°
Bulb Life	2000 hrs
Bulb Wattage	39W
Dimmable	Y
Light Output - Lumen	530
Voltage	120V
Warranty (Years)	1

Tel. : 514 695-8228 1 855 739-8228
Fax : 514 695-9009 1 855 812-9009





Image 1



Image 2



Image 3

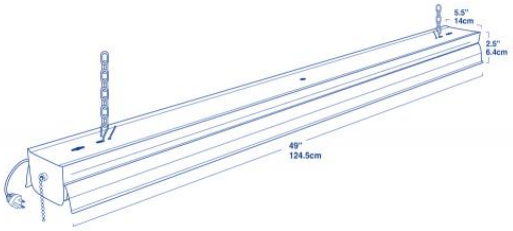

SL2LED48-40K-WH

LED SHOP LIGHT 48'' - 36W - TWIN TUBE

Product codes

SL2LED48-40K-WH : WHITE

A versatile 48" LED shop light, which may be installed in a variety of locations. The unit includes 2 LED replaceable T8 type 18W tubes, each offering 1500 lumens. An integrated driver is installed in each tube.

Each tube has a Shatter-Resistant coating protecting the lamp in the event of breakage.

With a combined output of 3000 lumens and a 4000k color temperature, this unit is well suited for work shops, garages or any work areas requiring a high level of illumination.

The unit also includes an ON/OFF pull chain, a 5' power cord with plug and mounting chains. (2x - 12'') All this to ensure a quick and easy installation.

As well, a 3 year warranty and 25,000 hour bulb life per tube is offered.

Technical information

CRI	80
Color Temperature	4000k
Height	2.50" (6.35 cm)
LED Life	25,000 hrs
Length	49" (124.46 cm)
Light Output - Lumen	3000
Operating Temperature	> -20°c
Voltage	120V
Warranty (Years)	3
Watt	36W
Warranty (Years)	3 Yrs / Ans
Width	5.50" (13.97 cm)

Tel. : 514 695-8228 1 855 739-8228
Fax : 514 695-9009 1 855 812-9009



CL70-LED

7" LED CEILING FLUSHMOUNT

Product codes

CL70-14W-4K-WH : WHITE - 4K
CL70-14W-3K-WH : WHITE - 3K

AVAILABLE OCTOBER 2016

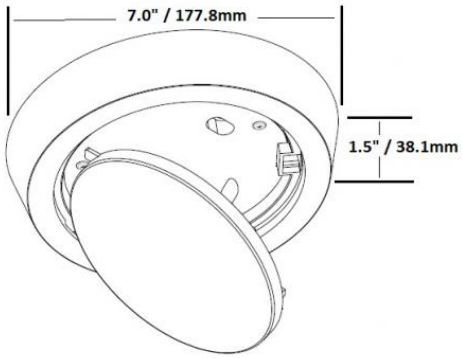

Technical information