STC-xx and STCU-xx
Signatouch Series Control

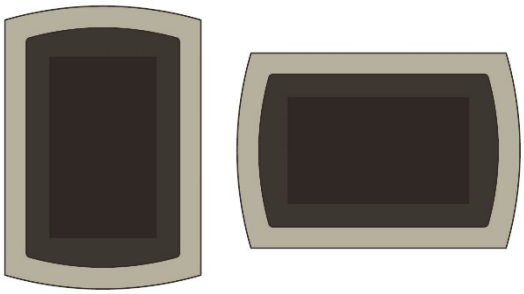

SPECIFICATIONS – Signature Control

Construction.....Black Acrylic or 6061 Aluminum
Display.....5" Capacitive Touch screen
Display Full Color.....16.7M
Display resolution.....480 x 800
Interface.....Single Touch

Signatouch Series operational features:

- **Digital Shower**
  - Operates flow, temperature, and output
- **Steam Shower**
  - Operates time, temperature, and auto powerflush
- **Light Sound and rainhead**
  - Control linked Bluetooth device
  - Control moodlight, shower light, and chromatherapy.

Signatouch Series features:

- Can be mounted vertically or horizontally
- 2 user settings
- Day clock
- 16 finishes

Installation Notes:

The control should be installed 60" inches from the floor of the shower, inside the shower only, and away from the steam head.

Finish Chart:
If selecting "WHT" or "BK" finish replace -xx with code in part number STC-xx. All other finishes replace the -xx in part number STCU-xx.

PC = Polished Chrome	PN = Polished Nickel
SC = Satin Chrome	SN = Satin Nickel
PB = Polished Brass	BN = Black Nickel
SB = Satin Brass	AN = Antique Nickel
AB = Antique Brass	PG = Polished Gold
COP = Polished Copper	ORB = Oil Rubbed Bronze
ACOP = Antique Copper	WHT = White
MB = Matte Black	BK = Black

Product Specification:

The user interface control shall be 5.6" x 3.5" x 0.65" in dimension. The Control shall be made from black acrylic(-BK,-WHT) or billet aluminum (Other Finishes) and includes the ability to operate and control: Smart Steam, Fast Start, Auto PowerFlush, Light and Sound System. By using a 100% networked digital technology.

Shipping Information:

Weight.....1.25 lbs.
Length.....9.5 in.
Width.....6.5 in.
Height.....2.5 in.

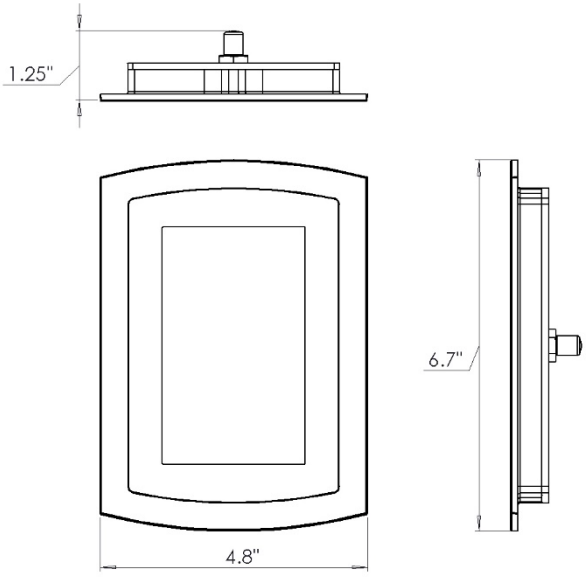

For any further assistance please contact ThermaSol at 800.776.0711 or sales@thermasol.com

Visit www.thermasol.com for a complete product definition

DIGITAL SHOWER VALVE

TDS-3000



With a minimalist look desired by top architects, ThermaSol's Digital Shower eliminates the need for exposed valves and trims. The integrated system reduces installation costs and allows the budget to be invested into building a state-of-the-art shower environment.

SHIPPING WEIGHT

Weight | 10.65 lbs.

Length | 12 in.

Width | 16 in.

Height | 3.5 in.

FEATURES

- Industry leading ceramic disc Flühs valves ensures reliability and safety
- Operates two industrial grade stepper motors with 400 positions that take away the noise factor found with solenoid valve systems and provides precise temperature control
- May be installed up to 30 ft. away from shower
- Three output valve - Example: Rainhead, Hand Shower and Standard Showerhead
- Battery backup included
- Output 9.25 GPM at 45 PSI
- IAPMO Approved

SPECIFICATIONS

Two Inputs | 1/2" FNPT

Three Outputs | 1/2" FNPT

Power Supply | Input 110VAC .5 AMP Output 15VDC, 3 AMPS Required

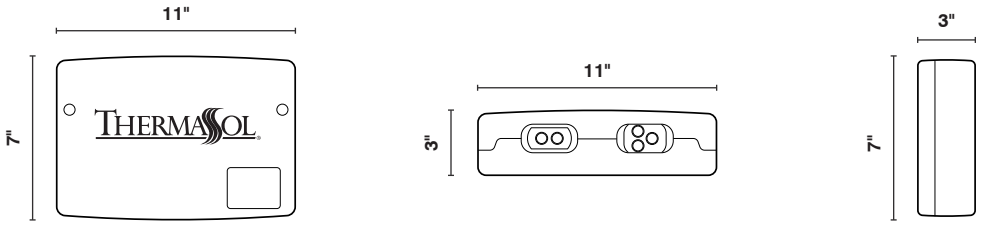

INSTALLATION NOTES

- Refer to ThermaSol installation Instructions Doc No. 81216 for complete instructions.
- Digital Shower Valve must be accessible do not seal into walls.