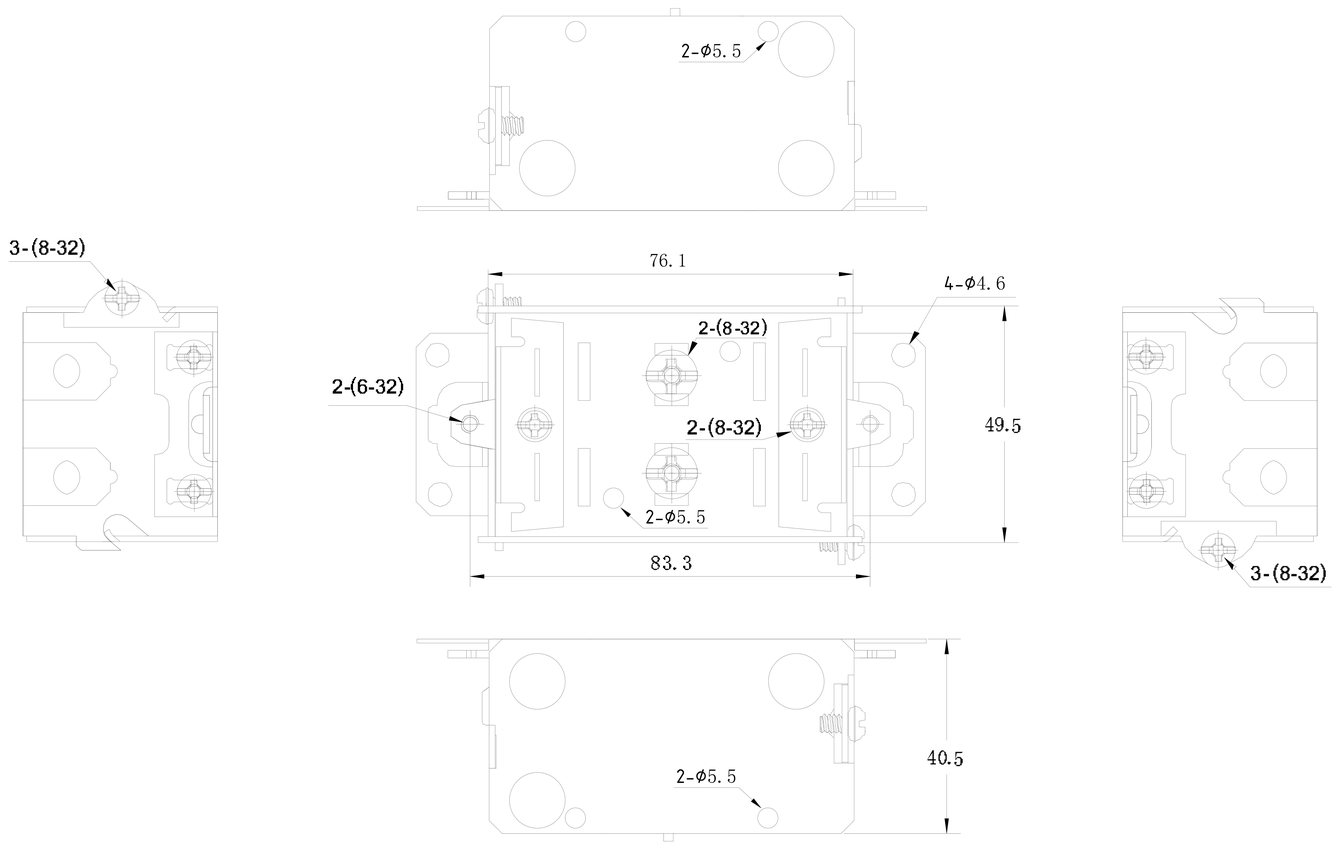

Technical Requirement:

1. Material:Pre-galvanized Steel G20
2. Minimum Thickness:1.3mm(-0.03mm +0.00mm)
3. Measurement:mm
4. Certification:cETL

HUBBELL tradeSELECT™

HUBBELL CANADA ULC
870 Brock Road
Pickering, Ontario
Canada L1W 1Z8

GEN. TOLERANCES		X.XX = ±0.20mm X.X = ±0.50mm X. = ±0.80mm		X.X = ±0.5° X. = ±1°	
Designer		Item No.:	H1100LUBAR	PE	
Date		CHECKED BY		SCALE	1:1
Page	1	APPROVED BY			