bsi. Stainless Steel Pliable Tubing KITEMARK™

KM 587681
BS EN 15266

XR2 A FITTING SOLUTION

Gastite®
The System is the Solution™

Issued March 2017
Updated November 2020

Design & Installation Guide

Corrugated stainless steel tubing system
for gas installations in buildings

User Warnings

All gas installation work shall be carried out by a business or self employed operative who is a member of a class of persons approved by the Health and Safety Executive (HSE). Current registration body is Gas Safe Register.

Acceptable certificates of competence are those issued under the: Nationally Accredited Certification Scheme (ACS) for individual gas fitting operatives; or Scottish/National Vocational Qualifications (NVQ) that have been aligned to ACS in matters of gas safety.

Only those components provided or specified by Gastite as part of the approved Corrugated Stainless Steel Tube (CSST) system are to be used in the installation. The Gastite® system of CSST and fittings is not compatible with other manufacturer's flexible gas piping systems. It is important to note that any mixing of products may result in failure of the system with potentially serious consequences.

All gas appliances and other gas fittings must be installed with due regard to the manufacturer's installation instructions, the Gas Safety (Installation and Use) Regulations 1998 and the relevant requirements of the Building Regulations and British Standards.

Improper installation methods or procedures could lead to accidents such as explosions, fires, gas poisoning, asphyxiation, etc. The Gastite® CSST system shall be installed with strict adherence to this guide as well as local building regulation. All installed systems must pass installation inspections by the authorized local building official prior to being placed in service. Gastite shall have no responsibility for any misinterpretation of the information contained in this guide or any improper installation or repair work or other deviation from procedures recommended in this guide, whether pursuant to local building regulation or engineering specifications or otherwise.

Although the Gastite® CSST system provides significant advantages over more rigid gas delivery systems, its wall dimensions may make it more likely than steel tubing to be punctured by a nail or other sharp objects, or damaged by other extraordinary forces such as a lightning strike, depending on the circumstances. The user must ensure that the system is properly bonded and grounded.

No naked flame shall to be used in the vicinity of any part of the Gastite® CSST system.

Caution CSST tube ends are sharp. Use care when handling. CSST shall not be used as a flexible appliance connector.

Section 1.0 Scope of Design and Installation Guide 5
1.1 Supporting Documents 6
1.2 Definitions 6
1.3 Competence And System Conformity 7
1.3.1 Competence 7
1.3.2 System Conformity 7

Section 2.0 Description of the Gastite® System and System Components 8
2.1 Gastite® CSST Tubing 8
2.2 Gastite® Male Mechanical Joints 9
2.3 Copper Compression Fittings 9
2.4 Gastite® Female Mechanical Joints 9
2.5 Gastite® Couplings 9
2.6 Gastite® Mechanical Tees 10
2.7 Gastite® Accessories 10
2.8 Sleeving 10

Section 3.0 Planning and Sizing 11
3.1 General 11
3.1.1 Equivalent Tubing Lengths 12
3.2 Sizing Gas Supplies 12

Section 4.0 Safety Precautions 14
4.1 General 14
4.2 Fire Protection 15

Section 5.0 Installation Practice 17
5.1 Minimum Bend Radii 17
5.2 Sleeves 18
5.3 Tubing in Ducts 18
5.3.1 Installation in Ventilated Ducts 18
5.3.2 Installation in Unventilated Ducts 18
5.3.3 Installation Within a Chase 19
5.4 Cutting and Fitting Assembly 19
5.4.1 Torque Values 20
5.5 Main Equipotential Bonding 20
5.6 Gastite® Supports and Support Spacing 22
5.7 Supports 22
5.8 Gastite® CSST in Wooden Joisted Floors 22
5.8.1 Installation Between Floor Joists or Roof Spaces 22
5.8.2 Installation Across Joists in Ceiling or Roof Spaces 22
5.8.3 Installation in Intermediate Joisted Floors 23
5.9 Gastite® Tubing Laid in Concrete Floors 24
5.9.1 General 24
5.9.2 Movement and Settlement 24
5.9.3 Gastite® CSST Passing Through Solid Floors 24
5.9.4 Gastite® Fittings 25
5.10 Gastite® CSST in Walls 26
5.10.1 Tubing Runs 26
5.10.2 Cavity Walls 26
5.10.3 Dry Lined Walls 26
5.10.4 Timber Construction Walls 27
5.10.5 Solid Walls 27

5.11 Exterior Tubing 29
5.12 Connection and Disconnection of Gastite® CSST and Fittings 29

Section 6.0 Prevention of corrosion or degradation of Gastite® CSST 30

Section 7.0 Gas tightness testing and purging 31
7.1 New Installations 31
7.2 Existing Installations 31
7.3 Purging 31

Section 8.0 Damage and Repair 32
8.1 Small Visible Damages to the Cover 32
8.2 Damage of Tubing 32
8.3 Connection to Other Systems 33

Section 9.0 Sizing Tables 34
9.1 Differential Pressure for Natural Gas 34
9.2 Differential Pressure for Propane 34
9.3 Differential Pressure for Butane 35

Section 10.0 Warranty 35

Section 1.0 Scope of Design & Installation Guide

The Gastite® corrugated stainless steel tubing (CSST) system can be used for installations of natural gas and LPG. The system is approved under the BS Kitemark numbers KM 587681.

The approvals were made in accordance with BS EN 15266: 2007 Corrugated stainless steel semi-rigid pipe and associated fittings for low pressure gas pipework of up to DN50.

The Kitemark licence covers Gastite® sizes DN15, 20, 25, 32, 40 & 50 and all associated fittings.

This D & I Guide contains portions of BS 6891 language where appropriate. BS 6891 is the installation specification for low pressure natural gas pipework of up to 35mm (R 1¼") in domestic premises. This standard applies to gas installation pipework where the nominal working pressure is 21 mbar.

BS 5482 Part 1 specifies requirements for the installation at permanent dwellings of domestic systems using liquefied petro-leum gases (LPG), weather from cylinders of bulk supply at a pressure of 28 mbar for commercial butane and of 37 mbar for commercial propane.

The installation of pipework in sizes above DN32 and for working pressures above 21 mbar falls under the institution of Gas Engineers and Managers Utilization Procedures IGEM/UP/2 Latest Edition.

Sound engineering principles and practices must be exercised for the proper design of fuel gas piping systems in addition to compliance with Gas Safety, Building Regulations and with British Standards requirements. The Installation instructions contained in this Design & Installation Guide must be strictly followed in order to provide a safe and effective fuel gas pip-ing system or system modification.

This Design & Installation Guide is intended to aid the Gas Safe Registered gas pipe installer in the design, installation and testing of the Gastite® semi-rigid piping system.

It is not possible for the Design & Installation Guide to anticipate every variation in construction style, building configura-tion, appliance requirement or local restriction. Therefore this document will not cover every application. The user should contact us, exercise his/her own judgement on system design and installation, or seek technical input from other qualified sources. Additional information pertaining to gas piping systems is available from IGEM, Gas Safe and your local gas utility.

The Gastite® corrugated stainless steel tubing (CSST) system can be used for domestic and industrial and commercial (I&C) applications.

1.1 Supporting Documents

BS EN 15266:2007: Corrugated stainless steel tubing kits in buildings for gas with an operating pressure up to 0.5 bar.

Part Number	BS EN 15266
CSST-EU-DN15	DN15
CSST-EU-DN20	DN20
CSST-EU-DN25	DN25
CSST-EU-DN32	DN32
CSST-EU-DN40	DN40
CSST-EU-DN50	DN50

BS 5482: Code of practice for domestic butane and propane-gas burning installations Part 1: Installations at permanent dwellings, residential park homes and commercial premises, with installation tubing sizes not exceeding DN25 for steel and DN25 for corrugated stainless steel or copper.

BS 6891:2015: Installation of low pressure gas tubing of up to 35 mm (R1 1/4") in domestic premises (2nd family gas).

IGEM/UP/1/New Edition 2 2003: Strength testing, tightness testing of industrial and commercial gas installations.

IGEM/UP/1A/New Edition 2 2003: Strength testing, tightness testing and direct purging of small, low pressure industrial and commercial Natural Gas Applications.

IGEM/UP/1B – Edition 2: Tightness testing and purging of domestic sized Natural Gas Installations.

IGEM/UP/2 – Latest Edition: The Institution of Gas Engineers and Managers Communication 1729, Utilization Procedures - Gas Installation Tubing, Boosters and Compressors and installation pipework on industrial and commercial premises.

BS EN 1775:2007: Gas supply. Gas tubing for buildings. Maximum operating pressure less than or equal to 5 bar. Functional recommendations.

BS 476: Fire resistance of building materials / elements.

BS 7671:2008: Requirements for electrical installations. IEE Wiring Regulations. Seventeenth edition BS 7671: Requirements for electrical installations.

BS 6004:2000: Electric cables. PVC insulated, non-armoured cables for voltages up to and including 450/750 V, for electric power, lighting and internal wiring.

BS 6400-2:2006: Specification for installation, exchange, relocation and removal of gas meters with a maximum capacity not exceeding 6 m3/h. Medium pressure (2nd family gases).

BS 6231:2006: Electric cables. Single core PVC insulated flexible cables of rated voltage 600/1000 V for switchgear and control gear wiring.

BS 6007:2006: Electric cables. Single core unsheathed heat resisting cables for voltages up to and including 450/750 V, for internal wiring.

1.2 Definitions

Bending Radius
The radius measured to the centre line of the Gastite® CSST.

Recommended Bending Radius
Recommended radius above which the Gastite® CSST is designed to operate with no pressure drop attributable to the bend.

Tightening Torque
Nut tightening torques for connecting fittings to Gastite® CSST.

Mechanical Joint (EN1775)
Metal-to-metal connection within which gas tightness is achieved by threaded compression of the two component parts.

1.3 Competence and System Conformity

1.3.1 Competence

All gas installation work shall be carried out by a business or self employed operative who is a member of a class of persons approved by the Health and Safety Executive (HSE). Currently Gas Safe Register is the Registration Body.

Acceptable certificates of competence are those issued under the: Nationally Accredited Certification Scheme (ACS) for individual gas fitting operatives; or Scottish/National Vocational Qualifications (NVQ) that have been aligned to ACS in matters of gas safety.

1.3.2 System Conformity

Only those components provided or specified by Gastite as part of the approved piping system are to be used in the installation. The Gastite® CSST system of piping and fittings is not compatible with other manufacturer's flexible gas piping systems. It is important to note that any mixing of products may result in failure of the system with potentially serious consequences.

All gas appliances and other gas fittings must be installed with due regard to the manufacturer's installation instructions, the Gas Safety (Installation and Use) Regulations 1998 and the relevant requirements of the Building Regulations and British Standards.

Section 2.0 Description of the Gastite® System Components

The Gastite® CSST system provides the installer with both flexibility, in terms of positioning gas supply piping, the prospect of significantly reduced installation time and increased safety associated with using fewer joints and couplings.

The components of the Gastite® CSST system together with dimensions are detailed below.

2.1 Gastite® Tubing

MATERIAL

Tubing: Stainless Steel 1.4306 - 304L 10.0

Cover: Polyethylene

CSST

GASTITE® CSST DIMENSIONS

Box/reel weights and dimensions are approximate.

	DN15	DN20	DN25	DN32	DN40	DN50
Outer Diameter w/ cover (mm)	19.8	25.7	33.3	39.5	48.4	60.5
Outer Diameter w/o cover (mm)	18.5	24.4	32.0	38.1	47.0	59.1
Internal Diameter (mm)	15.1	20.1	26.4	31.8	40.1	50.3
Tubing Wall Thickness (mm)	0.24	0.24	0.24	0.28	0.30	0.30
Cover Thickness (mm)	0.64	0.66	0.66	0.71	0.71	0.71

CORRUGATED STAINLESS STEEL PLIABLE TUBING (CSST)

Part No.	Description	Pkg. Qty.	Kg./ Reel	Reel Size (Dia x Width)
CSST-EU-DN15-30M	DN15 - CSST - Flexible Gas Piping	30m/Coil	8.8	50cm x 33cm
CSST-EU-DN15-75M	DN15 - CSST - Flexible Gas Piping	75m/Coil	18.3	50cm x 33cm
CSST-EU-DN20-30M	DN20 - CSST - Flexible Gas Piping	30m/Coil	10.6	50cm x 33cm
CSST-EU-DN20-75M	DN20 - CSST - Flexible Gas Piping	75m/Coil	23.9	55cm x 55cm
CSST-EU-DN25-30M	DN25 - CSST - Flexible Gas Piping	30m/Coil	15.4	55cm x 55cm
CSST-EU-DN25-45M	DN25 - CSST - Flexible Gas Piping	45m/Coil	20.9	55cm x 55cm
CSST-EU-DN25-75M	DN25 - CSST - Flexible Gas Piping	75m/Coil	31.2	65cm x 69cm
CSST-EU-DN25-90M	DN25 - CSST - Flexible Gas Piping	90m/Coil	38.1	65cm x 69cm
CSST-EU-DN32-45M	DN32 - CSST - Flexible Gas Piping	45m/Coil	28.3	65cm x 69cm
CSST-EU-DN32-75M	DN32 - CSST - Flexible Gas Piping	75m/Coil	43.7	65cm x 69cm
CSST-EU-DN32-90M	DN32 - CSST - Flexible Gas Piping	90m/Coil	51.6	65cm x 69cm
CSST-EU-DN40-45M	DN40 - CSST - Flexible Gas Piping	45m/Coil	33.8	65cm x 69cm
CSST-EU-DN40-75M	DN40 - CSST - Flexible Gas Piping	75m/Coil	56.8	80cm x 65cm
CSST-EU-DN50-45M	DN50 - CSST - Flexible Gas Piping	45m/Coil	48.9	80cm x 65cm

Contractor Kit

CONTRACTOR KIT (CSST/TWO MALE FITTINGS/INSTRUCTION SHEET)

Part No.	Description	Pkg. Qty.	Kg./ Reel	Box Size (Dia x Width)
CSST-KITEU-DN20-5	DN20 x 5M, 2 Male DN20 Fittings	5m	2.4	52cm x 14cm x 52cm
CSST-KITEU-DN20-10	DN20 x 10M, 2 Male DN20 Fittings	10m	3.0	52cm x 14cm x 52cm
CSST-KITEU-DN20-15	DN20 x 15M, 2 Male DN20 Fittings	15m	4.1	58.5cm x 22cm x 58.5cm
CSST-KITEU-DN25-5	DN25 x 5M, 2 Male DN25 Fittings	5m	3.0	58.5cm x 22cm x 58.5cm
CSST-KITEU-DN25-10	DN25 x 10M, 2 Male DN25 Fittings	10m	4.9	58.5cm x 22cm x 58.5cm
CSST-KITEU-DN25-15	DN25 x 15M, 2 Male DN25 Fittings	15m	6.6	58.5cm x 22cm x 58.5cm
CSST-KITEU-DN32-5	DN32 x 5M, 2 Male DN32 Fittings	5m	4.0	58.5cm x 22cm x 58.5cm
CSST-KITEU-DN32-10	DN32 x 10M, 2 Male DN32 Fittings	10m	6.2	58.5cm x 22cm x 58.5cm
CSST-KITEU-DN32-15	DN32 x 15M, 2 Male DN32 Fittings	15m	8.5	58.5cm x 22cm x 58.5cm

2.2 Gastite® Male Mechanical Joints

Male mechanical joint fittings connect the Gastite® CSST to manifolds or gas outlets.

MATERIAL
Body, Nut, Bushing: Brass CW603N

Straight Fitting

XR2 GASTITE® MALE MECHANICAL JOINTS (Adapter/Nut/Bushing)

Part No.	Description	Pkg. Qty.	Kg. Ea.
XR2-MEU-DN15	DN15 - 1/2" Male BSPT	1	.14
XR2-MEU-DN20	DN20 - 3/4" Male BSPT	1	.19
XR2-MEU-DN25	DN25 - 1" Male BSPT	1	.29
XR2-MEU-DN32	DN32 - 1-1/4" Male BSPT	1	.42
XR2-MEU-DN40	DN40 - 1-1/2" Male BSPT	1	.65
XR2-MEU-DN50	DN50 - 2" Male BSPT	1	1.08

2.3 Copper Compression Fittings

Straight Fittings connect the flexible gas piping to copper gas piping.

MATERIAL
Fitting Adapter, Bushings, Nut: Brass

Compression Fitting

COPPER COMPRESSION FITTINGS

Part No	Description	Pkg. Qty.	Kg./Box
XR2-CCEU-DN15x15	DN15X15 Copper Compression Fitting	1	.14
XR2-CCEU-DN20x15	DN20X15 Copper Compression Fitting	1	.20
XR2-CCEU-DN20x22	DN20X22 Copper Compression Fitting	1	.22
XR2-CCEU-DN25x22	DN25X22 Copper Compression Fitting	1	.32
XR2-CCEU-DN25X28	DN25X28 Copper Compression Fitting	1	.33
XR2-CCEU-DN32X22	DN32X22 Copper Compression Fitting	1	.39
XR2-CCEU-DN32X35	DN32X35 Copper Compression Fitting	1	.42

2.4 Gastite® Female Mechanical Joints

Female mechanical joint fittings connect the Gastite® CSST to valves or fittings with male threads.

MATERIAL
Body, Nut, Bushing: Brass CW603N

Straight Female Fitting

XR2 SERIES FEMALE MECHANICAL JOINTS (Adapter/Nut/Bushing)

Part No.	Description	Pkg. Qty.	Kg. Ea.
XR2-FEU-DN15	DN15 - 1/2" Female BSPT	1	.14
XR2-FEU-DN20	DN20 - 3/4" Female BSPT	1	.2
XR2-FEU-DN20-15P	DN20 - 1/2" Female BSPT	1	.22

2.5 Gastite® Couplings

Mechanical couplings join Gastite® CSST of the same size.

MATERIAL
Body, Nut, Bushings: Brass CW603N

Coupling

XR2 SERIES COUPLINGS

Part No.	Description	Pkg. Qty.	Kg. Ea.
XR2-CEU-DN15	DN15 - Coupling	1	.22
XR2-CEU-DN20	DN20 - Coupling	1	.32
XR2-CEU-DN25	DN25 - Coupling	1	.5
XR2-CEU-DN32	DN32 - Coupling	1	.59
XR2-CEU-DN40	DN40 - Coupling	1	.9
XR2-CEU-DN50	DN50 - Coupling	1	1.8

2.6 Gastite® Mechanical Tees

Mechanical Tees join Gastite® CSST of the same or different sizes.

MATERIAL
Body, Nut, Bushing: Brass CW612N

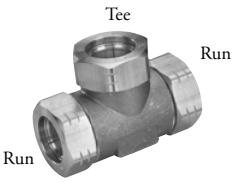

Tee Fitting

XR2 SERIES TEE FITTINGS

Part No.	Description	Pkg. Qty.	Kg. Ea.
XR2-TEU-DN15	DN15 - Tee Fitting	1	.41
XR2-TEU-DN20	DN20 - Tee Fitting	1	.63
XR2-TEU-DN25	DN25 - Tee Fitting	1	1.02
XR2-TEU-DN20-15-15	DN20 x DN15 x DN15 - Tee Fitting	1	.55
XR2-TEU-DN20-20-15	DN20 x DN20 x DN15 - Tee Fitting	1	.57
XR2-TEU-DN25-20-15	DN25 x DN20 x DN15 - Tee Fitting	1	.72
XR2-TEU-DN25-20-20	DN25 x DN20 x DN20 - Tee Fitting	1	.88
XR2-TEU-DN25-25-15	DN25 x DN25 x DN15 - Tee Fitting	1	.8
XR2-TEU-DN25-25-20	DN25 x DN25 x DN20 - Tee Fitting	1	.9

2.7 Gastite® Accessories

Cutters

Tape

GASTITE CUTTERS & TAPE

Part No.	Description	Pkg. Qty.	Kg. Ea.
GTCUTTER-SM	Cutter with flat rollers - 3/8" - 1" (.95cm - 2.54cm)	1	.7
GTCUTTER-LG	Cutter with flat rollers - Up to 2" (5.08cm)	1	.9
GTBLADE-SM	Replacement Blade for GTCUTTER-SM	1	.02
GTBLADE-LG	Replacement Blade for GTCUTTER-LG	1	.04
GT-TAPE	Self Amalgamating Jacket Repair Tape (10M approx.)	1	.13
GT-KNIFE	Utility Knife	1	.20

2.8 Sleeving

Sleeve

Part No.	Description	Pkg. Qty.	Kg./Box	Box Size (Dia x Width)
GTDUCT-DN2025-50M	50mm Corrugated Flexible Sleeve Ø 45mm	50m	7.5	88cm x 26cm
GTDUCT-DN3240-50M	63mm Corrugated Flexible Sleeve Ø 58mm	50m	11.0	97cm x 30cm

Section 3.0 Planning and Sizing

3.1 General

When designing an installation, the sizes of all installation piping shall be determined from the maximum gas rate of the appliances to be connected. Allowance can be made for the possibility of future extensions, especially if the piping is to be buried.

For natural gas, the pressure at the meter outlet should be 21 mbar and the pressure drop between the outlet of the meter and the points to be connected shall not exceed 1 mbar at maximum flow conditions. Low pressure 3rd family gas supplies should be regulated at 28 mbar (butane) or 37 mbar (propane), with a pressure drop not exceeding 2.5 mbar in accordance with the prescribed sizing methods in BS 5482-1, Latest Edition.

See below for the natural gas discharge rates through straight horizontal Gastite® CSST with a 1 mbar differential pressure between the ends.

Medium: Natural Gas
Pressure drop: 1 mbar
Inlet pressure: 21 mbar
Specific gravity: 0.6

Table 1: Discharge (m3/h) in a straight horizontal Gastite CSST with a 1 mbar differential pressure between the ends for NATURAL GAS of specific gravity 0.6

Tubing Size	Tubing Length (m)																	
	1	2	3	4	5	6	7	8	9	10	12	14	15	16	18	20	22	24
DN15	4.8	3.1	2.4	2.0	1.7	1.6	1.4	1.3	1.2	1.1	1.0	0.9	0.9	0.8	0.8	0.7	0.7	0.6
DN20	9.1	6.7	5.6	4.9	4.4	4.1	3.8	3.6	3.4	3.2	3.0	2.8	2.7	2.6	2.5	2.4	2.3	2.2
DN25	19.8	13.7	11.1	9.5	8.5	7.7	7.1	6.6	6.2	5.9	5.3	4.9	4.8	4.6	4.3	4.1	3.9	3.7
DN32	28.5	20.6	17.0	14.9	13.4	12.3	11.4	10.7	10.2	9.7	8.9	8.3	8.0	7.7	7.3	7.0	6.7	6.4
DN40	57.4	40.8	33.4	29.0	26.0	23.7	22.0	20.6	19.4	18.5	16.9	15.6	15.1	14.6	13.8	13.1	12.5	12.0
DN50	121.7	85.2	69.1	59.6	53.1	48.4	44.7	41.7	39.2	37.2	33.8	31.2	30.2	29.2	27.5	26.0	24.8	23.7

Tubing Size	Tubing Length (m)																	
	25	26	28	30	32	34	35	36	38	40	45	50	60	70	75	80	90	100
DN15	0.6	0.6	0.6	0.6	0.5	0.5	0.5	0.5	0.5	0.5	0.4	0.4	0.4	0.3	0.3	0.3	0.3	0.3
DN20	2.2	2.1	2.1	2.0	1.9	1.9	1.9	1.8	1.8	1.8	1.7	1.6	1.5	1.4	1.3	1.3	1.2	1.2
DN25	3.6	3.6	3.4	3.3	3.2	3.1	3.0	3.0	2.9	2.8	2.7	2.5	2.3	2.1	2.0	2.0	1.9	1.8
DN32	6.3	6.2	6.0	5.8	5.6	5.4	5.4	5.3	5.2	5.0	4.8	4.5	4.2	3.9	3.7	3.6	3.4	3.3
DN40	11.8	11.5	11.1	10.7	10.4	10.1	10.0	9.8	9.6	9.3	8.8	8.4	7.6	7.1	6.8	6.6	6.3	5.9
DN50	23.2	22.7	21.9	21.1	20.4	19.8	19.5	19.2	18.7	18.2	17.1	16.2	14.8	13.6	13.2	12.7	12.0	11.3

3.1.1 Equivalent Tubing Lengths

Table 2: Equivalent tubing lengths (m) for fittings and bends for 1 mbar differential pressure.

Size		Bend	Tee			Coupling
		90°	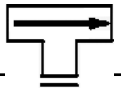 Through Flow	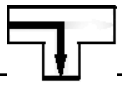 Diverted Flow	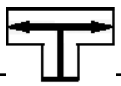 Two Directional	Coupling
Dimension	DN15	0.16	0.36	0.39	0.30	0.36
	DN20	0.17	0.31	0.83	0.31	0.31
	DN25	0.19	0.27	1.27	0.32	0.27
	DN32	0.21	n/a	n/a	n/a	0.23
	DN40	0.23	n/a	n/a	n/a	0.18
	DN50	0.26	n/a	n/a	n/a	0.10

3.2 Sizing Gas Supplies

In order to determine the size of the Gastite® CSST required for a specific natural gas application, the recommended approach is to allow for a 1mbar maximum pressure drop between the meter outlet and the inlets of appliances to be supplied. The Gastite® CSST size to be used should be such that each appliance can operate satisfactorily at the same time at their maximum gas rate.

Figure 1 represents an example of the lengths of the supply tubing together with the appliance gas rates involved (Table 4). Tubing has been sized using Table 1 and the results presented in Table 3.

Due consideration should be given to the pressure loss permitted in each section of the application e.g. the drop in pressure between A and H should not be greater than 1 mbar.

Each of the four elements of section A to H (A-B, B-D, D-F and F-H) carries a different gas rate and needs to be sized separately. With a total pressure drop permitted of 1 mbar, each sub-section should carry a drop in pressure of no more than 0.25 mbar. When calculating pressure drop using the data in Table 1, the length of tubing and also the number of tees and elbows needs to be taken into account (Table 2).

For the example given, each element is considered to be straight and horizontal.

Between elements D and F; the length of this section is 1.25 m and needs to carry gas at a rate of 1.5 m^3/h. It should have a pressure drop of no more than 0.25 mbar. A pressure loss of 0.25 mbar in a length of tubing 1.25 m is equal to one of (4x0.25) = 1 mbar in a length of (4x1.25 m) = 5 m.

In Table 1, the row corresponding to a length of 5 m and aiming for a discharge rate of 1.5 m^3/h, DN15 gives 1.7 m^3/h and DN20 gives 4.4 m^3/h.

In other words, the DN15 tubing gives sufficient flow rate of gas and DN20 diameter tubing is not required unless further appliances will be added or upgraded in future.

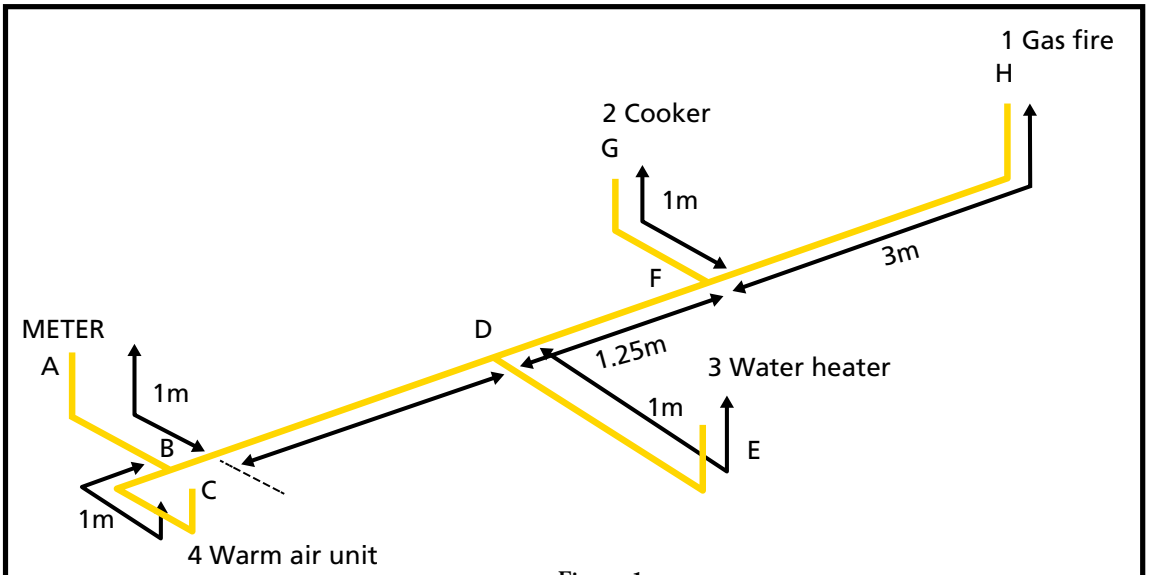

Figure 1

Table 3: Tube Sizing Results

Pipe Section	Gas Rate (m^3/h)	Pipe Length (m)	Equivalent Length Fitting [a]		Total Length (m)	Tube Diameter (mm)
			Type and Number	Equivalent Length (m)		
A-B	5	1	One Bend	0.17	1.17	20
B-C	1	1	Two Bends One Tee	0.16+0.16+ 0.36	1.68	15
B-D	4	3	One Tee	0.31	3.31	20
D-E	2.5	1	One Bend One Tee	0.16+0.39	1.55	15
D-F	1.5	1.25	One Tee	0.36	1.61	15
F-G	1	1	One Bend One Tee	0.16+0.39	1.55	15
F-H	0.5	3	One Bend One Tee	0.16+0.36	3.52	15

a) Most appliances have horizontal connections, so in practice an additional bend is required at each point
b) Note that losses through tees have to be considered in each branch

Table 4: Appliances Gas Rates			
Appliance	**Gas Rate (typical) (m3/h)**	**Key in figure 1**	**Total gas flow rate (m3/h)**
Warm air unit	1.0	4	5.0
Multi-point water heater	2.5	3	
Cooker	1.0	2	
Gas fire	0.5	1	
Central heating boiler	1.5	n/a	
Combination boiler	2.5	n/a	

Section 4.0 Safety Precautions

4.1 General

In advance of the installation process, a risk assessment should be conducted to ensure the level of risk during tubing installation is minimized as far as is reasonably practicable.

For example, installers need to consider the risk of persons restoring the gas supply at the primary meter should they leave the general location where the work is in progress.

While installation work is in progress, care shall be taken to prevent the ingress of dirt, water, etc., into installation tubes. Such ingress could adversely affect the flow characteristics within the tubing and even block flow altogether (i.e. appliance orifice).

Where work is in progress on tubing already connected to a meter, either:

a) the meter shall be disconnected temporarily and both the open ends of the tubing sealed and dust caps fitted to the meter; or
b) all open ends of the Gastite® tubing shall be plugged, capped or terminated with a self-sealing appliance connector conforming to BS 669: Part 1 or BS 669: Part 2 as appropriate, before the work is left unattended.

Following the completion of work, open ends of all Gastite® tubing shall be plugged, capped or terminated.

When running Gastite® tubing in intermediate floors within dwellings, care should be taken to note the position of electrical cables, junction boxes and associated equipment, so that accidental damage or injury is prevented when introducing the tubing.

Direct contact between Gastite® CSST and continuous metallic systems is prohibited. When installing Gastite® CSST, maintain as much isolation/separation as reasonably possible from other continuous metallic systems in the building.

For further information regarding separation, please refer to BS 6891:2005.

Similarly, Gastite® tubing location should be marked so that re-fixing floors using nails or screws can be done safely.

4.2 Fire Protection

In buildings containing flats and/or maisonettes, Gastite® installations shall be fire stopped as Gastite® tubing passes from one floor to another unless they are installed in their own fire protected shaft that is ventilated top and bottom to outside atmosphere. When installation pipes from a continuous duct enter a flat or maisonette they shall be fire stopped at the point of entry (see Figures 2 and 3).

Fire stopping material should be tested in accordance with BS 476 and be able to resist fire for periods that are in line with that required for the structure (load bearing capacity, integrity and insulation).

For Gastite® tubing passing through ducts, the normal minimum period of fire resistance is 30 minutes for buildings of not more than three storeys.

Gastite® tubing within sleeves must not adversely affect the fire resistance of the building.

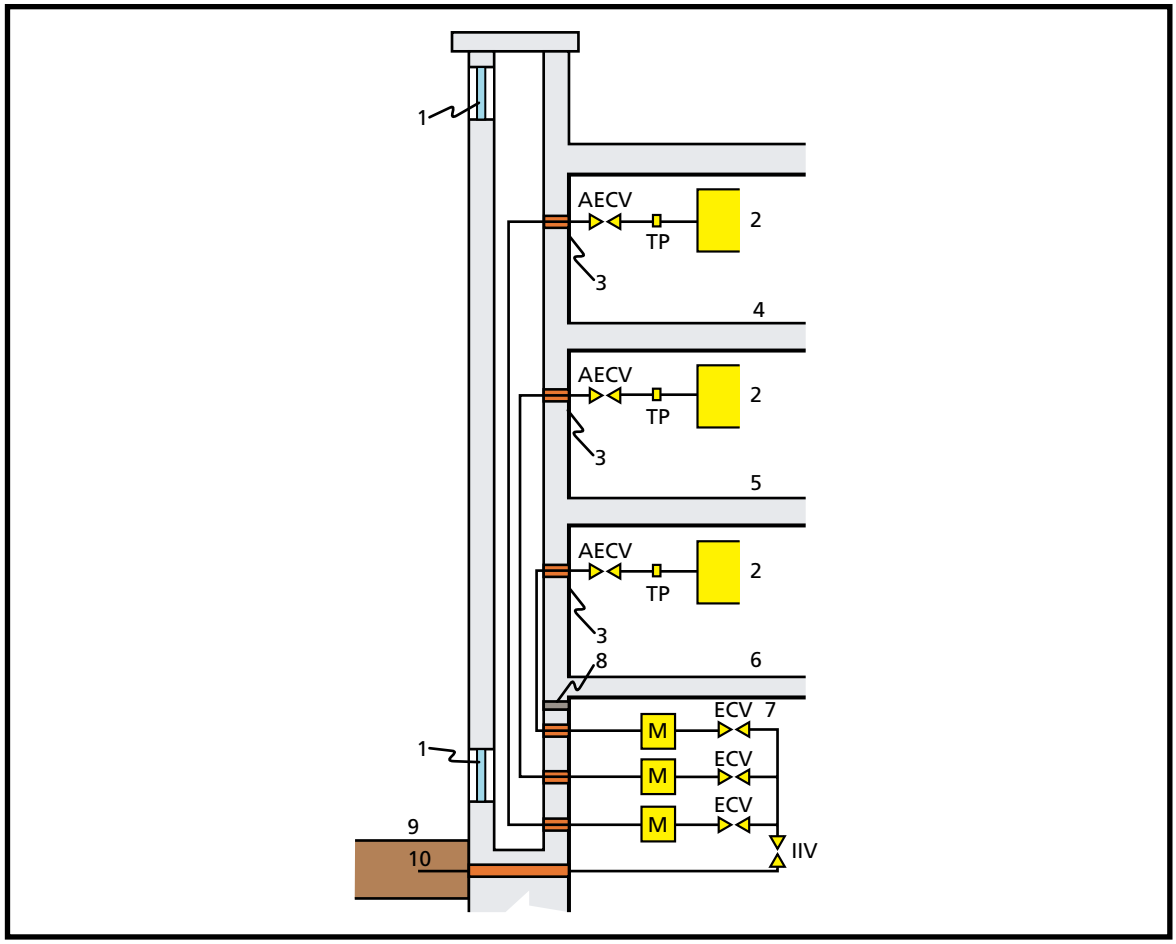

Figure 2: Elements of typical installation in multi-storey buildings containing flats or maisonettes installation via a ventilated enclosed area

1. Ventilation	**9.** Ground level
2. Appliance	**10.** Gas service
3. Fire stop	**ECV.** Emergency control valve
4. Flat 3	**AECV.** Additional emergency control valve
5. Flat 2	**IIV.** Inlet isolation valve
6. Flat 1	**M.** Gas meter
7. Meter room	**TP.** Test point
8. Meter room ventilation	

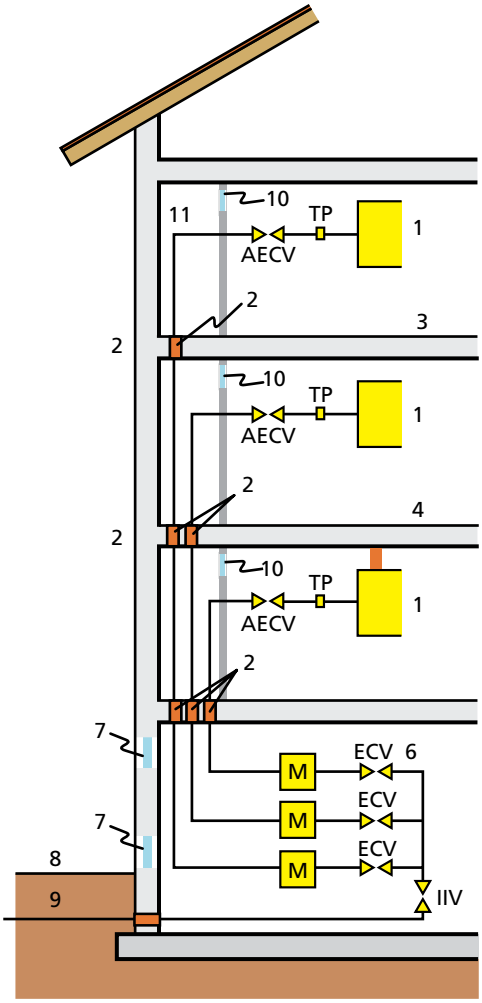

Figure 3: Elements of typical installation tubing in multi-storey buildings containing flats or maisonettes installation via a ventilated enclosed area

1. Appliance	**9.** Gas service
2. Fire stop	**10.** Vent
3. Flat 3	**11.** Enclosure
4. Flat 2	**ECV.** Emergency control valve
5. Flat 1	**AECV.** Additional emergency control valve
6. Meter room	**IIV.** Inlet isolation valve
7. Meter room ventilation	**M.** Gas meter
8. Ground level	**TP.** Test point

Section 5.0 Installation Practice

Best practice (see BS 6891:2015) dictates that the Gastite® CSST shall either be physically protected or else positioned within a property in a location where it is not prone to being mechanically damaged.

Similarly, the bore of the Gastite® tubing shall not be affected by kinking, burring, foreign material within the tubing or by any other means.

Additionally, all system hardware should be stored in its original packaging prior to installation and kept in a dry location. Gas tubing should not be left outside prior to installation.

The Gastite® tubing shall be of adequate length and capacity. Make continuous runs wherever possible.

Gastite® tubing exposed to extreme low temperature should be allowed to warm up to room temperature.

Gastite® tubing may be directly buried in concrete floors. Pipe laid in concrete shall be installed in accordance with (Figure 10 Page 25) After the piping is laid and prior to pouring screed the entire run of Gastite® that is to be buried must be examined visually and manually. The installer must closely inspect the jacket over the entire length to check for any damage or voids which could affect corrosion resistance. Repair any damage by wrapping with tape. Tape wrapping must be done using Gastite® self-bonding silicone tape.

Gastite® tubing may be directly buried externally underground providing minimal burial depths are applied.

Gastite® fittings shall not be buried in the structure or below ground. Boxes, with removable plywood covers and suitable for accessing Gastite® fittings within a floor screed are available from specialized suppliers and described as Conduit junction boxes.

Carefully unwind and route the Gastite® tubing from the reel to the required location, making certain not to kink, tangle or apply excessive force.

Gastite® tubing ends must be temporarily capped or taped closed prior to installation to prevent contamination from foreign material.

When installing Gastite®-tubing, avoid sharp bends, stretching, kinking, twisting or contacting sharp objects. The tubing shall be replaced if damage occurs.

Gastite tubing shall not be installed within a chase and/or enclosure that includes a metallic appliance vent and/or metallic chimney liner that protrudes through and/or past the roof.

5.1 Minimum Bend Radii

Regardless of the condition, large, smooth radius bends are preferred in order to reduce pressure loss.
Avoid repeated bending during installation.

Table 5: Recommended installed bend radii

Gastite® Part No.	Tubing Size	Absolute Min. Bend Radius	Suggested Bend Radius
CSST-EU-DN15	DN15	19mm	75mm
CSST-EU-DN20	DN20	25mm	75mm
CSST-EU-DN25	DN25	76mm	125mm
CSST-EU-DN32	DN32	76mm	125mm
CSST-EU-DN40	DN40	76mm	125mm
CSST-EU-DN50	DN50	102mm	150mm

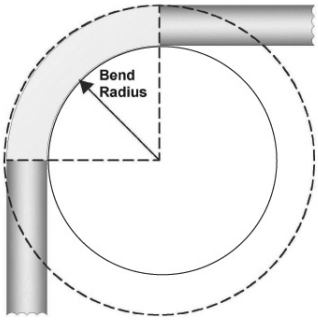

5.2 Sleeves

Gastite® tubing passing through a solid wall or a floor needs to be sleeved. The coating or cover sleeve shall be made of a material capable of containing gas such as steel, polyethylene (PE) or polyvinyl chloride (PVC).

A sleeve is required to pass through the full width of a wall or the full thickness of the floor and must not adversely affect the fire resistance of the building.

The annular space between the Gastite® tubing and the sleeve needs to be sealed to the tubing at one end with flexible fire resistant compound. In the event of a sleeve passing through an exterior wall, the seal needs to be on the inside of the wall.

The sleeve should be such that the Gastite® tubing can be inserted satisfactorily into it and be of sufficient diameter to enable effective sealing between the tubing and the sleeve.

Gastite® fittings should not be located within a sleeve.

The outside of the sleeve shall be secured and sealed at each end to the structure of the building with a suitable building material, e.g. cement mortar.

5.3 Tubing in Ducts

5.3.1 Installation in Ventilated Ducts

Vertical or horizontal ducts containing Gastite® CSST are required to be ventilated in order that any minor gas leakage within the duct, which is leakage that would not be detected by the normal gas tightness testing methods, does not cause the atmosphere within the duct to become unsafe.

Ventilation guidance is provided in Table 7 for different duct sizes.

Ducts with a small cross-sectional area and volume (less than 0.01 m^2 with a total volume less than 0.1 m^3) are considered to be sufficiently ventilated by adventitious openings.

Table 7: Free area of ventilation openings

Cross-sectional Area of Duct m^2	Minimum Free Area of Each Opening m^2
Not exceeding 0.01	0
0.01 and not exceeding 0.05	Cross sectional area of duct
0.05 and not exceeding 7.5	0.05
Exceeding 7.5	1/150 of the cross sectional area of the duct

5.3.2 Installation in Unventilated Ducts

Gastite® tubing must not be installed in an unventilated duct or void although tubing may be continuously sleeved to allow it to pass through such a duct or void safely.

Gastite® tubing must not be installed in a cavity wall; neither shall it pass through a cavity wall except by the shortest possible route and even then it must be sleeved (see 5.2).

5.3.3 Installation Within a Chase

Gastite® tubing shall not be installed within a chase and/or enclosure that includes a metallic appliance vent and/or metallic chimney liner that protrudes through and/or past the roof.

5.4 Cutting and Fitting Assembly

The following is a step by step procedure for cutting Gastite® CSST to length and fitting a connection.

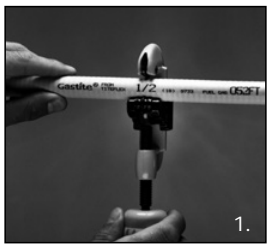

1. CUT TO LENGTH :
Cut tubing to the desir ed length leaving approximately 25mm for fitting attachment. Cut should be centered between two corrugations. Use light roller pressure with extra rotations in one direction to leave tubing round and free of burrs. Note: To ensure a quality flare, all cuts should be made on a straight section of tubing.

2. STRIP COVER :
Using a utility knife, strip cover back to the valley of the second corrugation.
Do not cut the cover in such a way that the sealing surface of the tubing is scored. The short piece of cover can easily be removed by placing the utility knife blade under the . cover to peel the jacket off. Caution: Tube ends are sharp, use care when handling.

3. FIT XR^2 FITTING:
Thread fitting body into appliance. Slide nut over tubing. Separate bushings and position, as shown, into the valley of the first corrugation leaving one corrugation-top exposed between the end of the bushing and tubing. At this point, the bushings will begin to capture the jacket for a contaminant resistant seal.

- It is important to know that the cover locking feature of the Jacket-Lock fitting is not required to produce a gas-tight seal between the fitting and the tubing.
- Pipe dope or sealant must not be used inside the fitting prior to assembly.

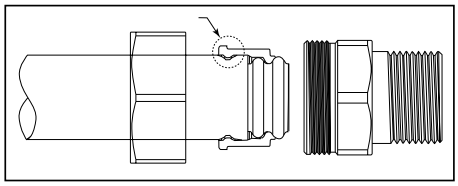

4. POSITION BUSHINGS :
Insert bushings into fitting body. A small amount of resistance indicates the bushings are being compressed to further capture the cover. Note: The piloting feature of the bushings ensures the tubing is aligned properly with the fitting body for a uniform flare and a gas tight seal.

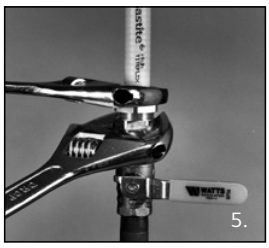

5. FINAL TORQUE:
Slide nut over bushings and thread onto fitting body. Some resistance will be experienced as the nut begins to compress the corrugation and create the double wall flare. Continue to thread the nut until resistance to wrenching increases greatly and the double wall flare is tightly seated. Note: During the tightening process rotate the nut only. Do not rotate the fitting body. Any portions of the exposed stainless steel tubing shall be wrapped with tape or sleeved to prevent threats by acids or chloride based cleaning solutions for masonry. Self-bonding silicone tape or rubber mastic tape is recommended here for durability.

5.4.1 Torque Values

Table 6: Torque Values		
Tubing Size	**Minimum Tightening Torque (Nm)**	**Maximum Tightening Torque (Nm)**
DN15	47	94
DN20	61	122
DN25	88	176
DN32	129	258
DN40	163	300
DB50	203	350

Note: Torque values supplied for reference only.

5.5 Main Equipotential Bonding

All domestic gas installations shall have main equipotential bonding of the gas installation conforming to BS 7671.

Main equipotential bonding shall be connected:

a) on the customer's side of the meter
b) as close as practicable to the meter before any branch in the installation tubing
c) in a position where it is accessible, can be visually observed, and fitted with a warning label stating 'Safety electrical connection. Do not remove.'
d) by a mechanically and electrically sound connection which is not subject to corrosion

Main equipotential bonding of the gas installation tubing should be made using cable with minimum cross-sectional area of 10 mm^2 cable with green and yellow insulation, construction reference 6419X conforming to BS 6004.

For internal meters, the bonding should be within 600 mm of the meter outlet in order to allow for inspection/verification.

For meters in outside meter boxes/compartments, the bonding connection should be preferably inside the building and as near as practical to the point of entry of the installation tubing into the building.

Alternatively, the connection may be made within the box/compartment, but it is essential that the bonding cable does not interfere with the integrity of the box/compartment and the sealing of any sleeve (see Figure 5).

When relocating a meter, an existing main equipotential bond may be satisfactory as found, or it may need to be either lengthened or shortened or, in some cases, completely re-run. The bonding connection is satisfactory if the conditions a) to d) above are met.

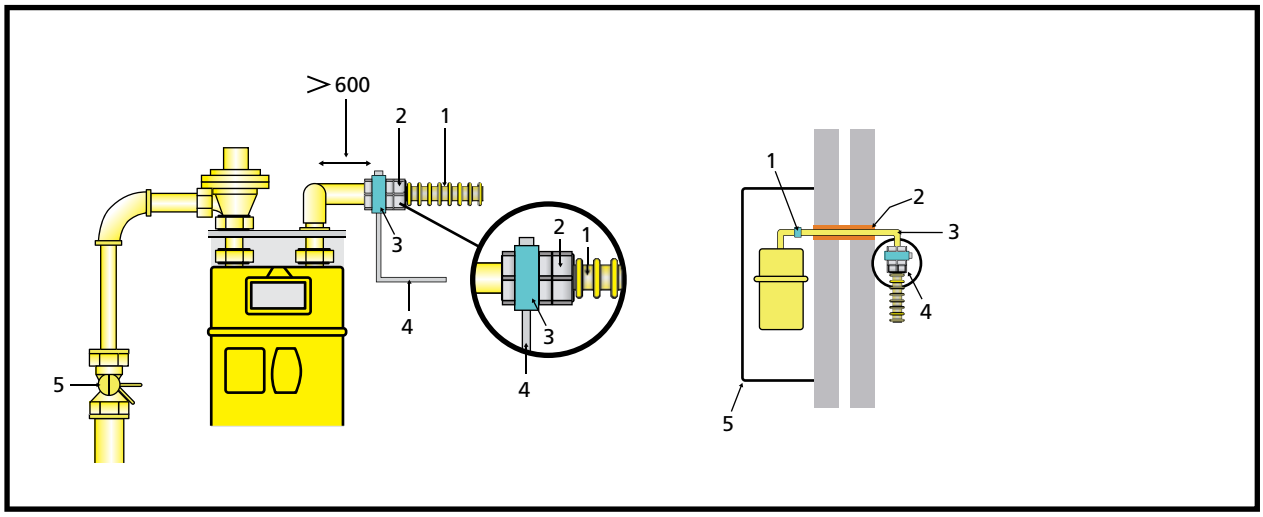

a) internal meter installation

b) meter installation in external box/compartment

Figure 5: Main equipotential bonding

1. Gastite® tubing
2. Fitting
3. Bonding connection
4. Green-yellow cable to consumer earth terminal
5. ECV = Emergency Control Valve

1. Bonding connection (non-preferred position)
2. Tubing sleeve (sealed)
3. Gastite® tubing
4. Bonding connection (preferred position)
5. Box/compartment

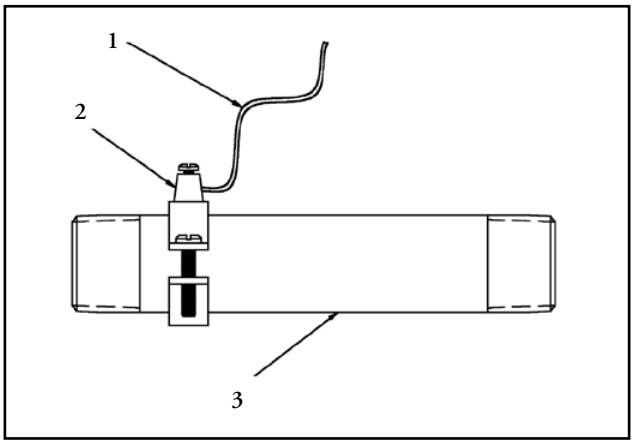

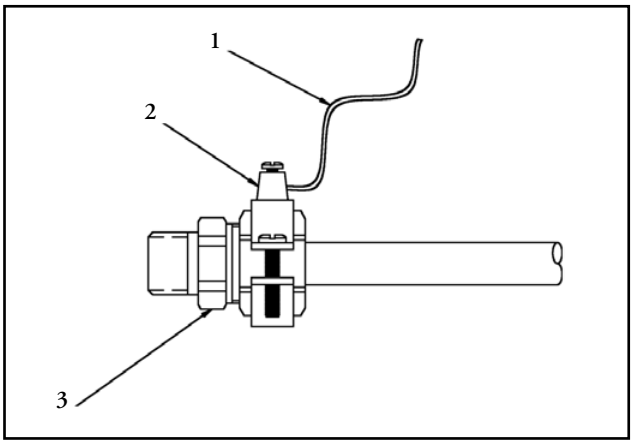

Figure 6:
Bonding Clamp on Gastite® CSST fitting.
(Erico Clamp #CWP1J, CWP2J or CWP3J)

1. Bonding Wire
2. Bonding Clamp
3. CSST Fitting

Figure 7:
Bonding Clamp on Steel Pipe Segment or Gastite® Stub-Out
(Remove any paint or coating on pipe surface beneath clamp location)

1. Bonding Wire
2. Bonding Clamp
3. Black Pipe Component or Gastite® Stub-Out

5.6 Gastite® Supports and Support Spacing

The Gastite® tubes must not be hung from other pipework and nothing must be supported from Gastite® tubing. It should be installed so that condensation or leaks from other pipes can not drip onto the Gastite® tubing.

Gastite® corrugated tubing can be installed in screed or plaster without cavities or in ducts and channels with adequate ventilation in accordance with BS6891:2015.

Support points must be strong enough to support the weight of the tubing, fittings and clamps.

Tubing shall be supported as specified in the requirements of BS6891:2015.

5.7 Supports

Recommended Support Spacing

TABLE 8 Recommended Support Spacing (m)		
DN Size	**Horizontal**	**Vertical**
DN 15	1.2 m	1.2 m
DN 20	1.8 m	1.8 m
DN 25	1.8 m	1.8 m
DN 32	2.5 m	2.5 m
DN 40	2.5 m	2.5 m
DN 50	2.5 m	2.5 m

5.8 Gastite® CSST in Wooden Joisted Floors

5.8.1 Installation Between Floor Joists or Roof Spaces

Where pipework is to be installed in joisted floors and roof spaces it shall run either in the direction of the joists or at 90° to the joist direction. Diagonal runs of pipework shall not be installed.

Where pipework is installed parallel to or at 90° to joists in floors, intermediate floors or roof spaces, it shall be supported in accordance with Table 8.

5.8.2 Installation Across Joists in Ceiling or Roof Spaces

Where Gastite® tubing is laid across the joists in ceiling or roof spaces fitted with flooring it shall be located in purpose-made notches or possibly circular holes (see Figure 9).

Joists less than 100 mm or greater than 250 mm shall not be notched.

5.8.3 Installation in Intermediate Joisted Floors

Where Gastite® tubing is laid in intermediate joisted floors within dwellings, unless there is sufficient adventitious ventilation, ventilation shall be in accordance with Table 7 (see 5.3.1).

For Gastite® tubing supplying natural gas between floors, research has recently demonstrated there is no requirement to incorporate ventilation in intermediate floors within conventional masonry, timber or light steel frame buildings. Minor leakage of natural gas should be dispersed safely in these situations. However, as the research did not cover LPG leakage, tubing supplying LPG via intermediate floors shall be ventilated in accordance with Table 7.

Specialist joist systems constructed of wood that are similar in appearance to rolled steel joists are now used in properties which cannot be notched for structural reasons. However, such joists can either be drilled or are supplied with 'knock out' holes, which are pre-drilled. Where these joists are to be drilled, it is essential that the recommendations of the joist manufacturer are always followed.

Gastite® tubing is particularly suitable for this system of joists as it can be threaded between joists with ease and so is compatible with this system. Before laying Gastite® tubing below suspended floors a visual inspection should be carried out to note the position of any electrical cables, junction boxes and ancillary equipment, in order that accidental damage or injury does not occur when inserting Gastite® tubing (see 4.1). Re-fixing flooring over Gastite® tubing should also be done with care (see 4.1).

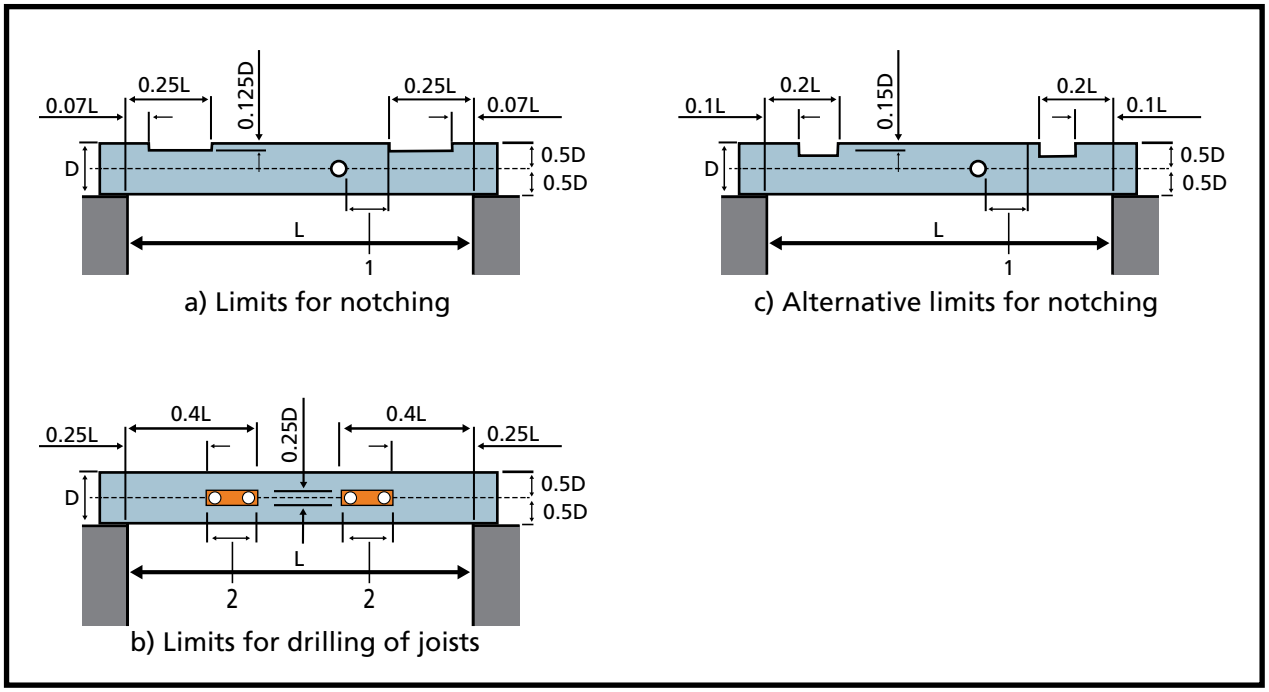

Figure 9: Limits for notches and drilling of solid timber floors

1. Minimum 100mm between notch and hole
2. Holes not closer than 3 x diameter

Table 9 - Clearance Holes		
Gastite® Part No.	Size	Drill Hole Size Diameter
CSST-EU-DN15	DN15	32 mm
CSST-EU-DN20	DN20	38 mm
CSST-EU-DN25	DN25	44 mm
CSST-EU-DN32	DN32	51 mm
CSST-EU-DN40	DN40	57 mm
CSST-EU-DN50	DN50	71 mm

5.9 Gastite®-Tubing Laid in Concrete Floors

5.9.1 General

Gastite® tubing may be directly buried in concrete floors. Pipe laid in concrete shall be installed in accordance with (Figure 10 Page 25) After the piping is laid and prior to pouring screed the entire run of Gastite® that is to be buried must be examined visually and manually. The installer must closely inspect the jacket over the entire length to check for any damage or voids which could affect corrosion resistance. Repair any damage by wrapping with tape. Tape wrapping must be done using Gastite® self-bonding silicone tape.

Pipes laid in concrete floors shall be protected against failure caused by movement.

Gastite® fittings shall not be buried in the structure or below ground. Boxes, with removable plywood covers and suitable for accessing Gastite® fittings within a floor screed are available from specialized suppliers and described as Conduit junction boxes.

5.9.2 Movement and Settlement

Gastite® is suitable to withstand seismic movement and settlement.

Gastite® is manufactured with a polyethylene jacket, which is soft yet thick enough to provide movement and resilient enough to support the concrete cover while it is setting.

5.9.3 Gastite® CSST Passing Through Solid Floors

Tubing passing vertically through solid floors shall take the shortest practicable route and shall be sleeved (see section 5.2).

5.9.4 Gastite® Fittings

No Gastite® fittings shall be buried in the structure or below ground. Boxes, with removable plywood covers and suitable for accessing Gastite® fittings within floor screed are available from specialised building suppliers, described as 'Conduit junction boxes'.

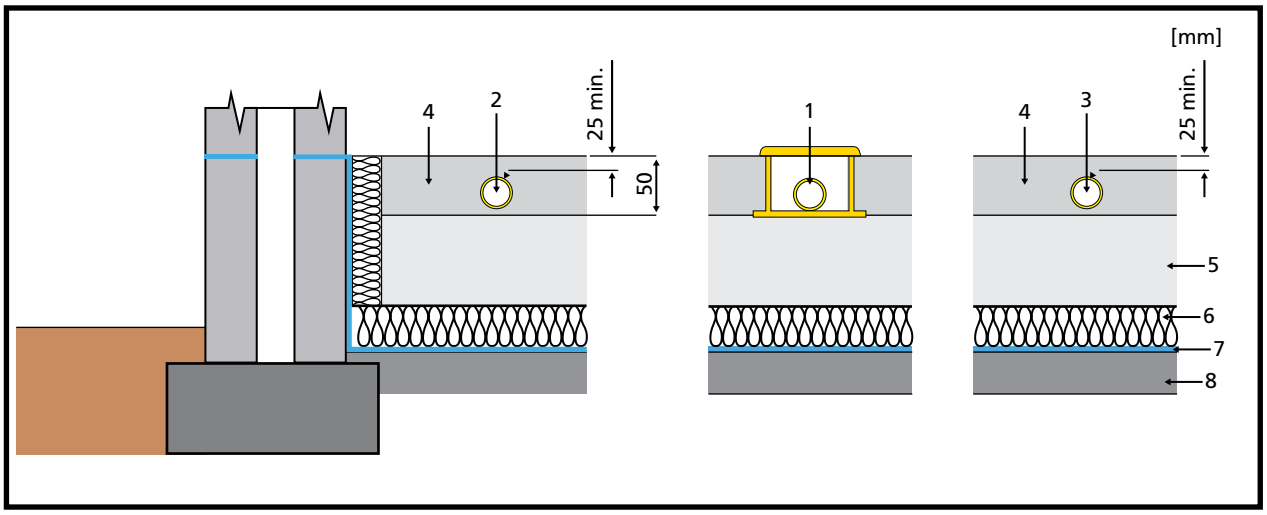

Figure 10: Ground bearing concrete floors

1. Gastite® tubing laid in preformed duct
2. Gastite® tubing laid in screed
3. Gastite® tubing laid in screed
4. Screed
5. Concrete slab
6. Insulation
7. Damp-proof membrane
8. Hardcore and sand blinding

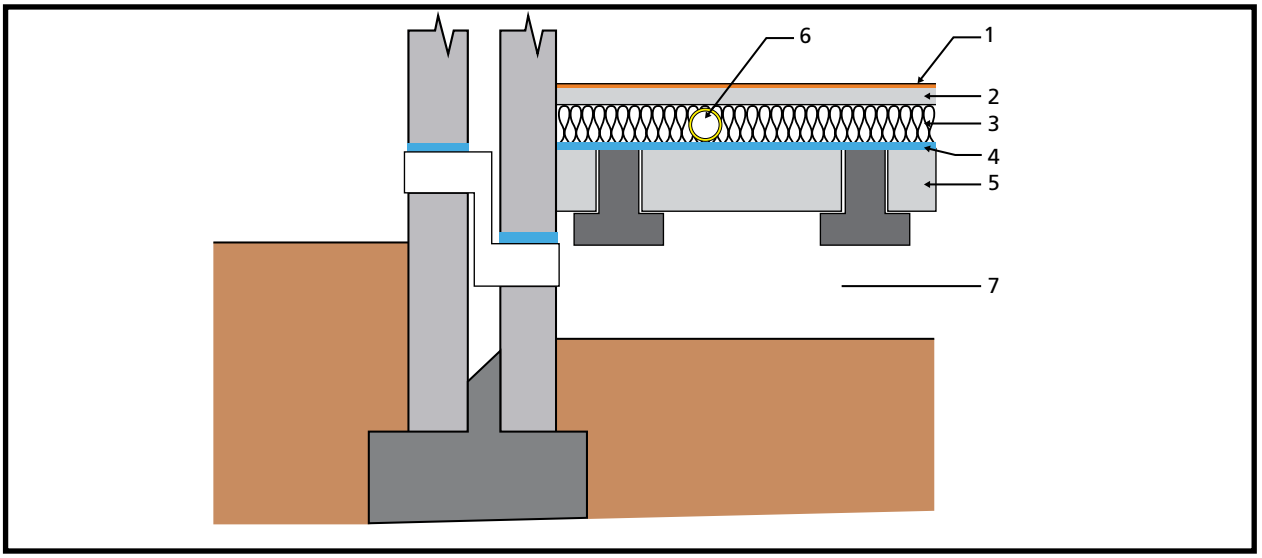

Figure 11: Suspended concrete floor

1. Chipboard over insulation
2. Chipboard
3. Insulation
4. Damp-proof membrane
5. Precast beam and block
6. Gastite® tubing laid in insulation layer
7. Ventilated void

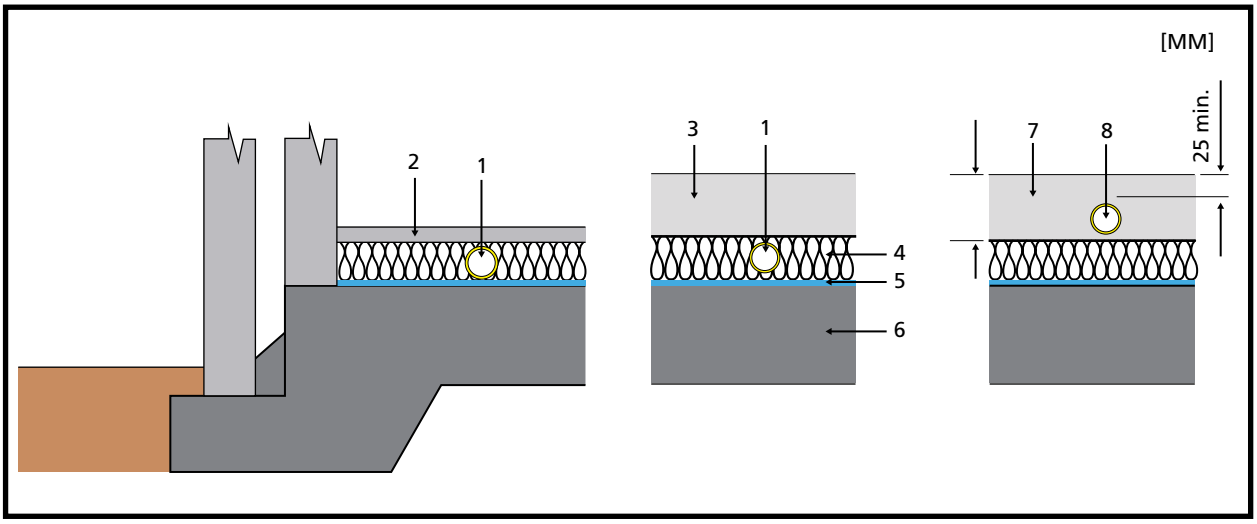

Figure 12: Concrete rafts

1. Gastite® tubing laid in insulation layer
2. Chipboard over insulation
3. Screed over insulation
4. Insulation
5. Damp-proof membrane
6. Concrete raft
7. Reinforced concrete screed
8. Gastite® tubing laid in reinforced concrete screed

5.10 Gastite® CSST in Walls

Examples of Gastite® tubing in masonry and timber frame walls are presented in Figures 13 -16.

These illustrate installation into walls that are:

- brick and block plastered (Figure 13)
- brick and block with dry lining on dabs (Figure 14)
- brick and block dry lined on battens (Figure 15)
- timber frame construction (see Figure 16)

5.10.1 Tubing runs

Gastite® tubing shall, wherever possible, be mounted vertically in ducts within which there are suitably located access points or else positioned in tubing chases. Tubing shall be secured to minimise movement and have as few joints as practicable.

5.10.2 Cavity Walls

Gastite® tubing shall not be positioned within the cavities of cavity walls. When tubing passes through such walls, they must be sleeved and take the shortest practicable route.

5.10.3 Dry Lined Walls

When installing Gastite® tubing behind dry lining, tubing shall be encased by building material.

5.10.4 Timber Construction Walls

For Gastite® tubing installed within the walls of timber-frame buildings, the tubing shall be:

a) run within channels or ducts that are purpose-designed
b) adequately secured
c) protected against mechanical damage within any void space
d) suitably protected against corrosion

Gastite® tubing should be secured at each floor, but will be free to move away from potential puncture threats behind plasterboard and other wall surfaces.

5.10.5 Solid Walls

All Gastite® tubing passing through a solid wall shall be sleeved (see section 5.2).

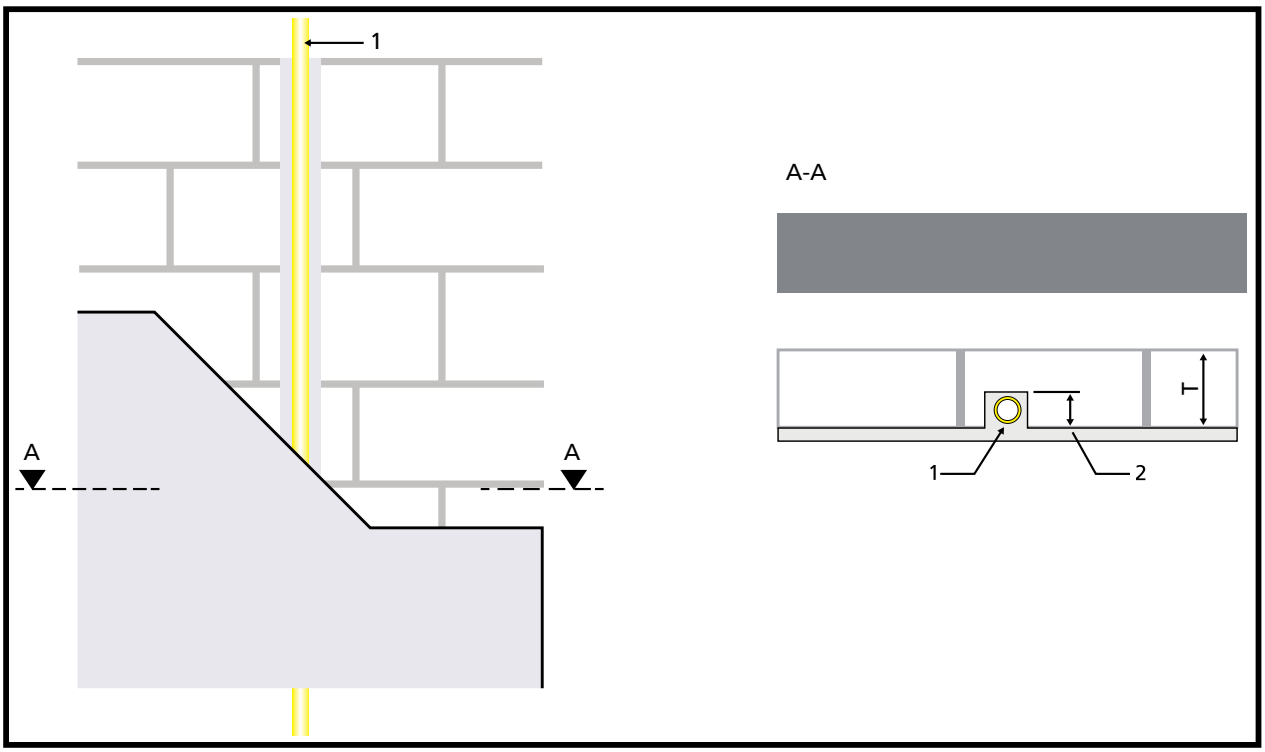

Figure 13: Brick and block plastered wall

1. Gas tubing set in chase
2. Chase depth
3. Gas tubing set in chase in plastered wall
Maximum depth of chase T/6 horizontal; T/3 vertical

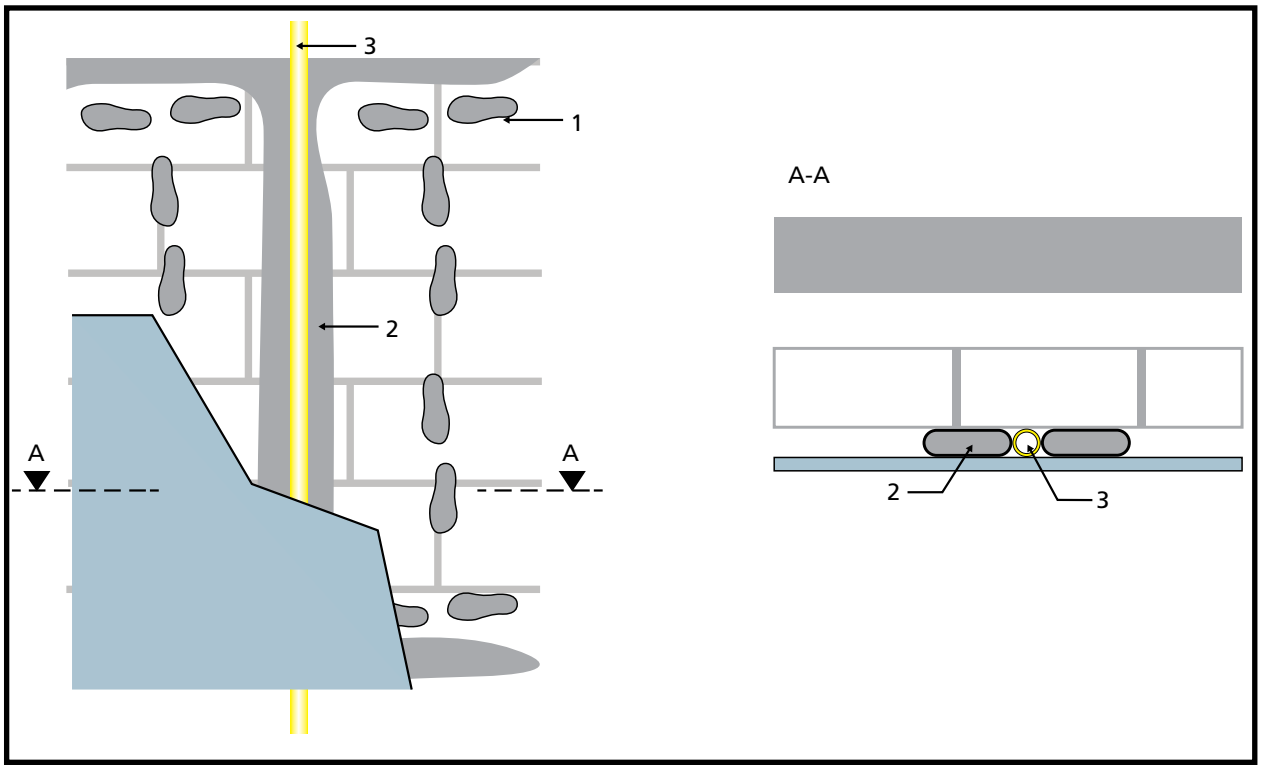

Figure 14: Brick and block with dry lining on dabs

1. Individual adhesive dabs
2. Continuous adhesive dabs to surround tubing
3. Gas tubing

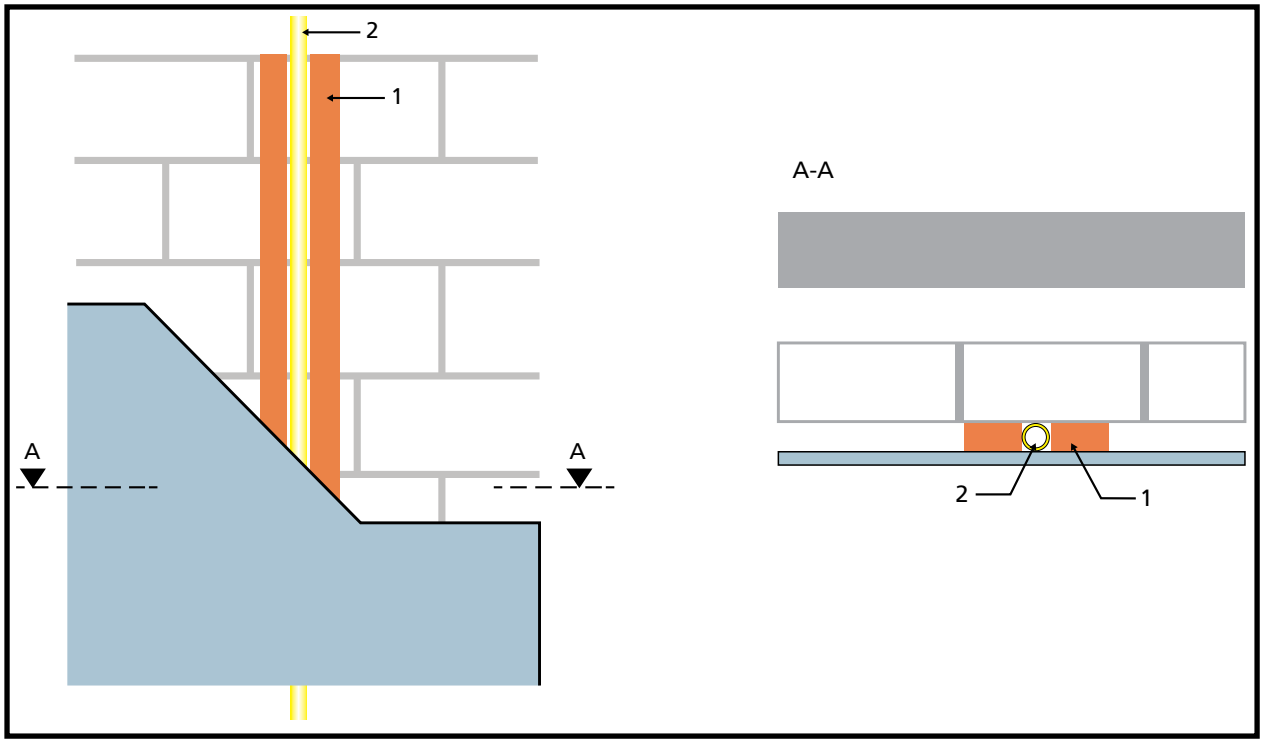

Figure 15: Brick and block dry line on battens

1. Timber battens
2. Gastite® tubing

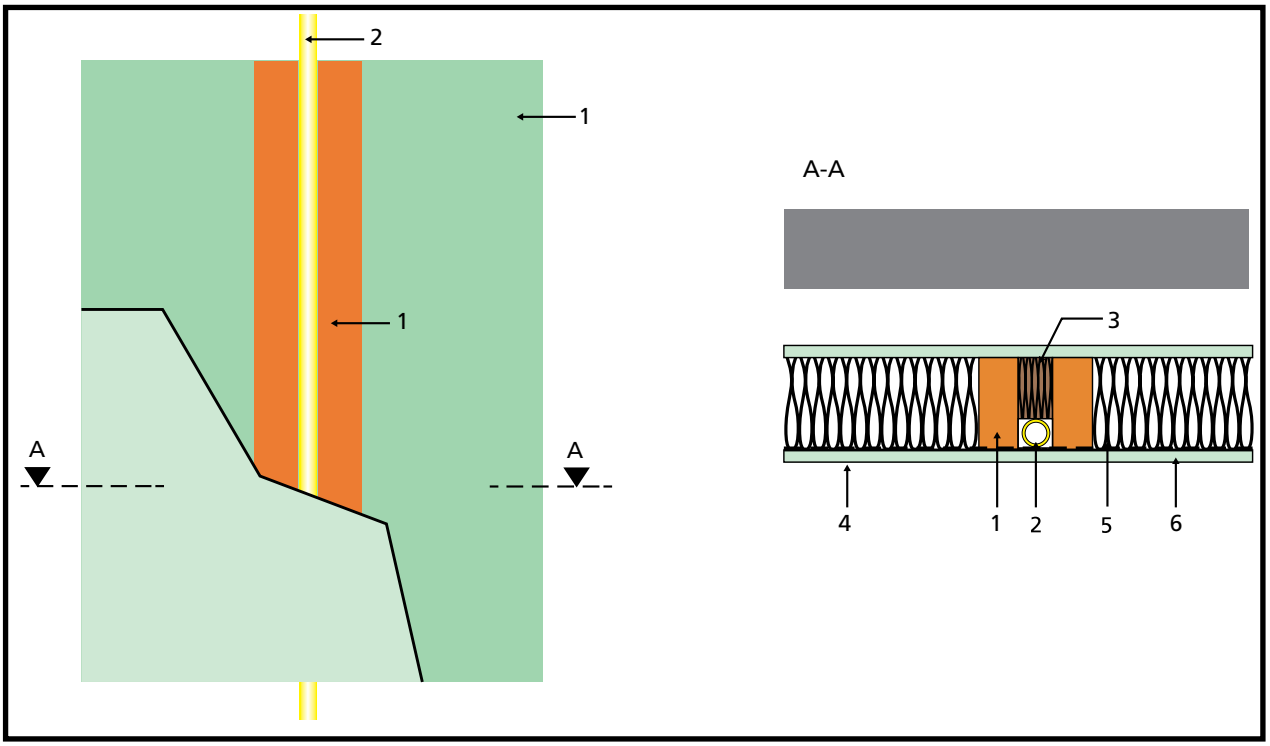

Figure 16: Timber frame construction

1. Timber stud	**4.** Plasterboard
2. Gastite® tubing	**5.** Metallic protection
3. Blocking piece	**6.** Vapour control barrier

5.11 Exterior Tubing

The Gastite® system can be installed outside. Provisions should be made to ensure that any low level pipework that may be at risk of being impacted is adequately protected against mechanical damage.

5.12 Connection and Disconnection of Gastite® CSST and Fittings

Where any Gastite® installation tubing is no longer required, the tubing shall be disconnected as close to the point of supply as practicable. All tubing ends shall be sealed, e.g. with a plug or cap.

During any work that necessitates connection or disconnection of any installed Gastite® tubing, a temporary continuity bond shall be fixed where production of a spark or shock could cause a hazard, whether or not permanent equipotential bonding has been established.

The recommended disconnection procedure is as follows:

a) Isolate the electrical connection of associated gas appliances from the main supply.
b) Clip or clamp a temporary continuity bond to each side of the union, fittings or complete section that is to be removed or connected ensuring that sound metallic contact is made.
c) Leave the bond in position until after the work is completed and metallic continuity re-established.

A recommended temporary continuity bond comprises of at least 1.2 m of single-core insulated flexible cable or equivalent of at least 250 V rating. The cable should have a cross-sectional area of not less than 10 mm2 and multi-strand flexible construction BS 6007 or BS 6231 with a robust clip or clamp firmly attached at each end.

Where the meter is removed BS 6400 should be consulted.

Section 6.0 Prevention of Corrosion or Degradation of Gastite® CSST

Gastite® system components shall not be exposed to any acids, bases, salts or other caustic materials. Some chemical compounds have been identified that may aggressively corrode 1.4306 stainless steel. Contact with these chemicals should be absolutely avoided. Any contact should be immediately and thoroughly washed off. The plastic covering is not affected by these compounds and will protect the tubing as long as it is undamaged.

Chemicals to avoid include the following:

-Hydrochloric Acid (common name: muriatic or brick wash)
-Zinc Chloride and Ammonium Chloride (soldering flux, pool algaecide)
-Calcium or Sodium Hypochlorite (bleach or pool chemicals)
-Copper Chloride (may be found in fungicides or wood preservatives)
-Ferric Chloride (swimming pool flocculent)
-Phosphoric Acid (scale removers)
-Sodium Chloride (salt water)
-Sulphuric Acid (battery acid)

Leak detection with chloride-containing compounds found in some common soap (e.g., dishwashing soap) can corrode Gastite® CSST. Avoid use of these compounds in connection with Gastite®.

Any leak detection solution coming in contact with the Gastite® system should have a sulphur, chlorine and halogen content of less than 10 ppm of each.

Section 7.0 Gas Tightness Testing and Purging

An assembled Gastite® gas supply installation shall be tested for gas tightness and purged in compliance with IGE/UP/1B.

7.1 New Installations

When new Gastite® tubing is installed in a property it has to be tightness tested using natural gas, propane or butane as appropriate once the connection to a gas supply has taken place. If such a gas supply connection has not been made, then pressurised air should be used.

A visual inspection of joints should be made to ensure they have been correctly made and a check should then be made to confirm there are no open ends on the tubing system.

Following this, the procedure in IGE/UP/1B should be followed.

7.2 Existing Installations

Here, gas tightness should be checked using natural gas, propane or butane as provided by the connected gas supply.

The gas tightness testing should be carried out as per IGE/UP/1B depending upon whether the maximum operating pressure is less than 75 mbar or greater than 75 mbar and with a test valve fitted to the installation tubing system.

7.3 Purging

IGE/UP/1B requires that whenever a gas supply system is commissioned or re-commissioned after being turned off, any air in the system must be purged.

First, the system should pass a satisfactory tightness test (as indicated in 7.1 and 7.2 above).

Section 8.0 Damage and Repair

If the Gastite® tubing is damaged, determine the extent of the damage and the method of repair.

8.1 Small Visible Damages to the Cover

Damage to the cover can lead to corrosion of the Gastite® tubing. Repair any damage of the cover by wrapping with Gastite silicone tape.

8.2 Damage of Tubing

The tubing must be replaced in the following cases:

a) The tubing has been excessively bent below the minimum bend radius so that the internal cross section has been deformed in shape.
b) The tubing has been punctured by nails or other sharp objects.
c) The tubing has been significantly crushed.

- Replace the entire tubing run. In most cases, when the tubing run is short and easily accessible, it can be replaced faster and more economically than repairing the damaged section. This is the preferred method because extra fittings are not required.

- Repair the damaged section. The damaged tubing can be repaired by each of the following two methods:

Method 1: Remove the section of tubing which is damaged and reconnect the new ends with a single mechanical coupling. Use this repair method if the damaged section is between 2 corrugations and if there is enough excess tubing in the run to make-up for the removed damaged length.

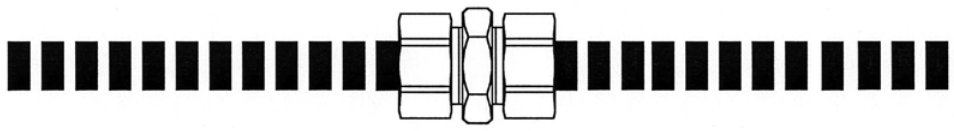

Typical Tubing Splice with Gastite Coupling

Figure 17: Repair of minor damage

Method 2: Remove the section of tubing which is damaged and splice in a new section of tubing with two mechanical couplings. Use this repair method if the extent of the damage covers more than a small area, and there is not enough slack in the existing tubing run to make-up the damaged length.

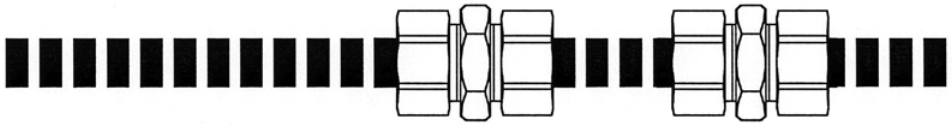

Typical Tubing Splice with two Gastite Couplings

Figure 18: Repair of major damage

8.3 Connection to Other Systems

Gastite® tubing may only be connected to other piping materials using approved screwed fittings. Copper pipe systems must be thoroughly cleaned and free from any solder flux residues before connecting Gastite® tubing.

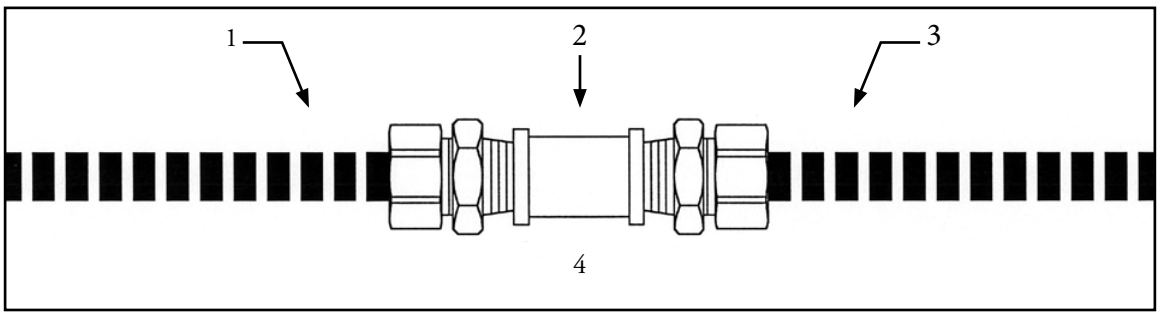

Figure 19: Repair of Damaged Tubing with Noncompatible Systems

1. Tubing and Fitting (System A)
2. Standard Pipe Coupling
3. Tubing and Fitting (System B)
4. Short Repaired Section

Section 9.0 Sizing Tables

Table 9.1: Discharge (m3/h) in a straight horizontal Gastite CSST with a 1 mbar differential pressure between the ends for NATURAL GAS of specific gravity 0.6

Tubing Size	Tubing Length (m)																	
	1	2	3	4	5	6	7	8	9	10	12	14	15	16	18	20	22	24
DN15	4.8	3.1	2.4	2.0	1.7	1.6	1.4	1.3	1.2	1.1	1.0	0.9	0.9	0.8	0.8	0.7	0.7	0.6
DN20	9.1	6.7	5.6	4.9	4.4	4.1	3.8	3.6	3.4	3.2	3.0	2.8	2.7	2.6	2.5	2.4	2.3	2.2
DN25	19.8	13.7	11.1	9.5	8.5	7.7	7.1	6.6	6.2	5.9	5.3	4.9	4.8	4.6	4.3	4.1	3.9	3.7
DN32	28.5	20.6	17.0	14.9	13.4	12.3	11.4	10.7	10.2	9.7	8.9	8.3	8.0	7.7	7.3	7.0	6.7	6.4
DN40	57.4	40.8	33.4	29.0	26.0	23.7	22.0	20.6	19.4	18.5	16.9	15.6	15.1	14.6	13.8	13.1	12.5	12.0
DN50	121.7	85.2	69.1	59.6	53.1	48.4	44.7	41.7	39.2	37.2	33.8	31.2	30.2	29.2	27.5	26.0	24.8	23.7

Tubing Size	Tubing Length (m)																	
	25	26	28	30	32	34	35	36	38	40	45	50	60	70	75	80	90	100
DN15	0.6	0.6	0.6	0.6	0.5	0.5	0.5	0.5	0.5	0.5	0.4	0.4	0.4	0.3	0.3	0.3	0.3	0.3
DN20	2.2	2.1	2.1	2.0	1.9	1.9	1.9	1.8	1.8	1.8	1.7	1.6	1.5	1.4	1.3	1.3	1.2	1.2
DN25	3.6	3.6	3.4	3.3	3.2	3.1	3.0	3.0	2.9	2.8	2.7	2.5	2.3	2.1	2.0	2.0	1.9	1.8
DN32	6.3	6.2	6.0	5.8	5.6	5.4	5.4	5.3	5.2	5.0	4.8	4.5	4.2	3.9	3.7	3.6	3.4	3.3
DN40	11.8	11.5	11.1	10.7	10.4	10.1	10.0	9.8	9.6	9.3	8.8	8.4	7.6	7.1	6.8	6.6	6.3	5.9
DN50	23.2	22.7	21.9	21.1	20.4	19.8	19.5	19.2	18.7	18.2	17.1	16.2	14.8	13.6	13.2	12.7	12.0	11.3

Table 9.2: Discharge (m3/h) in a straight horizontal Gastite CSST with a 2.5 mbar differential pressure between the ends for PROPANE gas of specific gravity 1.52

Tubing Size	Tubing Length (m)																	
	1	2	3	4	5	6	7	8	9	10	12	14	15	16	18	20	22	24
DN15	4.1	2.9	2.4	2.0	1.8	1.7	1.6	1.5	1.4	1.3	1.2	1.1	1.1	1.0	1.0	0.9	0.9	0.8
DN20	7.5	5.4	4.5	4.0	3.6	3.3	3.1	2.9	2.7	2.6	2.4	2.2	2.2	2.1	2.0	1.9	1.8	1.7
DN25	17.6	12.6	10.4	9.0	8.1	7.4	6.9	6.5	6.1	5.8	5.3	5.0	4.8	4.6	4.4	4.2	4.0	3.8
DN32	26.8	19.1	15.6	13.6	12.2	11.1	10.3	9.7	9.1	8.7	7.9	7.4	7.1	6.9	6.5	6.2	5.9	5.6
DN40	56.6	40.2	33.0	28.6	25.6	23.4	21.7	20.3	19.2	18.2	16.6	15.4	14.9	14.4	13.6	12.9	12.3	11.8
DN50	122.6	85.8	69.6	60.0	53.5	48.7	45.0	42.0	39.5	37.4	34.1	31.5	30.4	29.4	27.7	26.2	24.9	23.8

Tubing Size	Tubing Length (m)																	
	25	26	28	30	32	34	35	36	38	40	45	50	60	70	75	80	90	100
DN15	0.8	0.8	0.8	0.8	0.7	0.7	0.7	0.7	0.7	0.7	0.6	0.6	0.5	0.5	0.5	0.5	0.4	0.4
DN20	1.7	1.7	1.6	1.6	1.5	1.5	1.5	1.4	1.4	1.4	1.3	1.2	1.1	1.1	1.0	1.0	0.9	0.9
DN25	3.7	3.7	3.6	3.4	3.3	3.2	3.2	3.1	3.1	3.0	2.8	2.7	2.5	2.3	2.2	2.1	2.0	1.9
DN32	5.5	5.4	5.2	5.1	4.9	4.8	4.7	4.6	4.5	4.4	4.1	3.9	3.6	3.3	3.2	3.1	3.0	2.8
DN40	11.6	11.4	11.0	10.6	10.3	10.0	9.8	9.7	9.4	9.2	8.7	8.2	7.5	7.0	6.7	6.5	6.2	5.9
DN50	23.3	22.9	22.0	21.3	20.6	19.9	19.6	19.3	18.8	18.3	17.2	16.3	14.9	13.7	13.3	12.8	12.1	11.4

Table 9.3: Discharge (m3/h) in a straight horizontal Gastite CSST with a 2.5 mbar differential pressure between the ends for BUTANE gas of specific gravity 2.07

Tubing Size	Tubing Length (m)																	
	1	2	3	4	5	6	7	8	9	10	12	14	15	16	18	20	22	24
DN15	3.5	2.5	2.0	1.8	1.6	1.4	1.3	1.2	1.2	1.1	1.0	0.9	0.9	0.9	0.8	0.8	0.8	0.7
DN20	6.4	4.7	3.9	3.4	3.1	2.8	2.6	2.5	2.3	2.2	2.0	1.9	1.8	1.8	1.7	1.6	1.5	1.5
DN25	15.1	10.8	8.9	7.8	7.0	6.4	5.9	5.6	5.2	5.0	4.6	4.2	4.1	4.0	3.8	3.6	3.4	3.3
DN32	23.0	16.4	13.4	11.6	10.4	9.5	8.9	8.3	7.8	7.4	6.8	6.3	6.1	5.9	5.6	5.3	5.0	4.8
DN40	48.5	34.5	28.2	24.5	22.0	20.1	18.6	17.4	16.4	15.6	14.3	13.2	12.8	12.4	11.7	11.1	10.6	10.1
DN50	105	73.5	59.7	51.4	45.9	41.7	38.6	36.0	33.9	32.1	29.2	27.0	26.0	25.2	23.7	22.4	21.4	20.4

Tubing Size	Tubing Length (m)																	
	25	26	28	30	32	34	35	36	38	40	45	50	60	70	75	80	90	100
DN15	0.7	0.7	0.7	0.6	0.6	0.6	0.6	0.6	0.6	0.6	0.5	0.5	0.5	0.4	0.4	0.4	0.4	0.4
DN20	1.5	1.4	1.4	1.3	1.3	1.3	1.3	1.2	1.2	1.2	1.1	1.1	1.0	0.9	0.9	0.9	0.8	0.8
DN25	3.2	3.2	3.0	2.9	2.9	2.8	2.7	2.7	2.6	2.6	2.4	2.3	2.1	2.0	1.9	1.8	1.7	1.6
DN32	4.7	4.7	4.5	4.3	4.2	4.1	4.0	4.0	3.9	3.8	3.6	3.4	3.1	2.9	2.8	2.7	2.5	2.4
DN40	9.9	9.7	9.4	9.1	8.8	8.5	8.4	8.3	8.1	7.9	7.4	7.1	6.5	6.0	5.8	5.6	5.3	5.0
DN50	20.0	19.6	18.9	18.2	17.6	17.1	16.8	16.6	16.1	15.7	14.8	14.0	12.7	11.8	11.4	11.0	10.3	9.8

Section 10.0 Warranty

Gastite Division warrants its products to be free from any defect of workmanship and material. Should any such defects be discovered, the questionable product must be returned to Gastite Division. If, upon inspection, the part proves to be defective, Gastite Division will furnish a replacement, or, at its option, repair the part.

This warranty shall not apply to any part or parts of the Gastite® Flexible Gas Piping System product if it has been installed, altered, repaired or misused, through negligence or otherwise, in a way that in the opinion of Gastite Division affects the reliability of, or detracts from, the performance of the product. Nor does this warranty cover replacements or repairs necessitated by loss or damage resulting from any cause beyond the control of Gastite Division, including but not limited to, acts of God, acts of government, floods and fires.

The obligation of Gastite Division under this warranty is limited, at Gastite Division's discretion, to 1) making a replacement part available, 2) the repair of the defective part, or 3) refund of purchase price. This does not include the furnishing of any labor involved or connected therewith, such as that required to diagnose trouble or to remove or install any such product, nor does it include responsibility for any transportation expenses or any damages or losses incurred in transportation in connection therewith.

THE FOREGOING IS IN LIEU OF ANY OTHER WARRANTIES EXPRESSED, IMPLIED OR STATUTORY, INCLUDING, WITHOUT LIMITATION, THE IMPLIED WARRANTY OF MERCHANTABILITY, AND GASTITE DIVISION NEITHER ASSUMES NOR AUTHORIZES ANY PERSON TO ASSUME FOR GASTITE DIVISION ANY OTHER OBLIGATION OR LIABILITY IN CONNECTION WITH THE SALE OF ITS PRODUCTS.

FREE sizing app
available

Download on the App Store | GET IT ON Google Play

Gastite®
The System is the Solution™

Gastite® UK
Unit 3, Illuma House,
Gelders Hall Road,
Shepshed LE12 9NH

Telephone: **01509 508939**

Email: **info@gastite.co.uk**

Web: **www.gastite.co.uk**

PLEASE RECYCLE
THIS BROCHURE