LED Vanity Light

VL60236
INSTALLATION SHEET

START FROM HERE

- Make sure **POWER** is **COMPLETELY OFF** at the fuse box
- Have your fixture installed by a qualified licensed electrician
- Prepare everything in a clear area
- Wear gloves at all time during this installation
- Read instructions carefully before you start assembly
- Keep this installation sheet for future reference

Technical Support: 1-855-855-8926

Please Note:

- All Kuzco LED fixtures come with pre-wired LED module(s).
- Unless instructed to do so, please do not touch any part of the LED module(s) as any unnecessary contact with the module could cause permanent damage.
- For dimming, an ELV (Electronic Low Voltage) type of dimmer is required.

(Octagon junction box install)

1. Remove the fixture from its original packaging. Remove the crossbar **(1c)** from within the fixture **(3a)** by unthreading the set screws **(3b)** and two screws **(2c).** Attach the crossbar **(1c)** to the electrical junction box **(1a)**, using screws **(1d)** provided in the hardware package.
2. Make sure to thread the wires through the hole in the backplates **(2a and 2b)** and connect all wires correctly G ground to ground, N neutral wire (white to white), L live wire (black to black) with provided marettes **(1b)** from the hardware package. Attach the backplates **(2a and 2b)** to the crossbar with screws (2c). Connect the fixture to the backplate **(2b)** and adjust as neccessary. Use the set screws and allen key **(3b)** provided to lock the fixture in place
3. You have now completed the installation of your fixture, enjoy.

(Single gang box install)

1. Remove the fixture from its original packaging. Remove the backplate **(1c)** from within the fixture **(2b)** by unthreading the set screws **(2a).** Connect all wires correctly G ground to ground, N neutral wire (white to white), L live wire (black to black) with provided marettes **(1b)** from the hardware package. Attach the backplate **(1c)** to the single gang box **(1a)**, using screws **(1d)** provided in the hardware package.
2. Attach the fixture **(2b)** to the backplate **(1c)** and adjust as neccessary. Use the set screws and allen key **(2a)** provided to lock the fixture in place
3. You have now completed the installation of your fixture, enjoy.

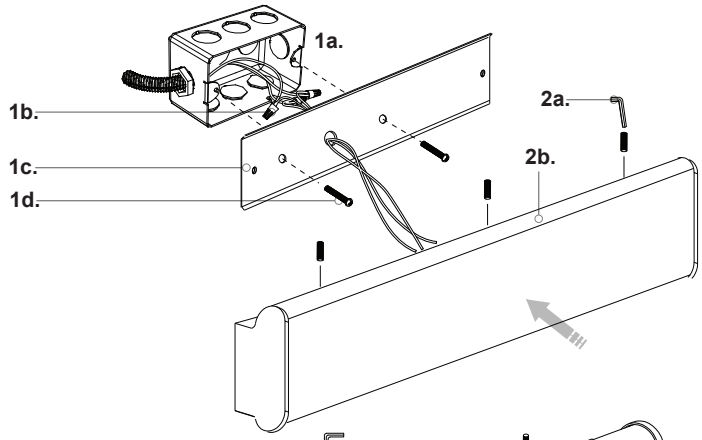

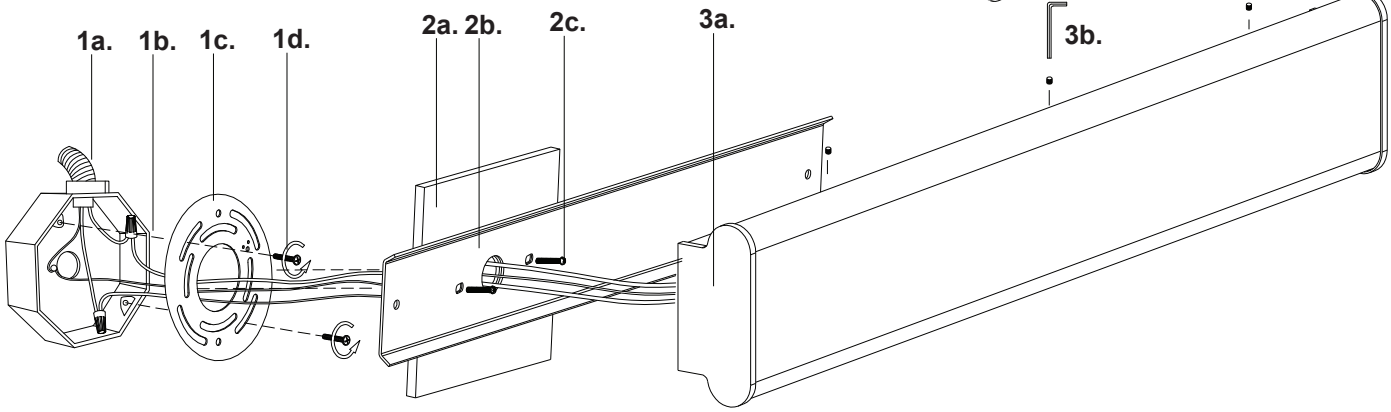

KUZCO
19054 28th Avenue Surrey, BC Canada V3Z 6M3
T: 604 538 7162 TF: 1-855 85 KUZCO F: 604 538 7196
W: kuzcolighting.com
20190205