

CASE

Towel holder for furniture, 10-5/8"

DIMENSIONS

Length	10 10/16 inch
Width	2 6/16 inch
Height	9/16 inch

COLOUR AND FINISH

106 Dark brown aluminium

Net weight (kg) : 0.4

TECHNICAL DRAWINGS

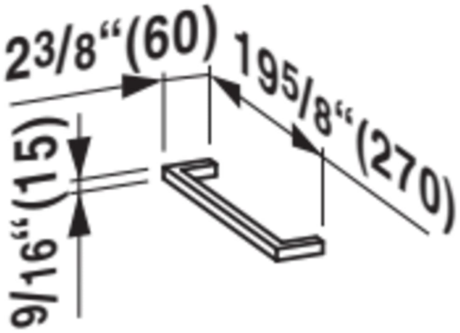

© Copyright 2023, LAUFEN Bathrooms AG | http://www.us.laufen.com/products/towel-holder-furniture-1058-H490950...0001?sku=H4909501060001

COMPATIBLE WITH



Vanity Only, 1 door, door hinge left, incl. drawer organizer, matching small washbasin 815961

H402111110...1



Vanity Only, 1 door, door hinge right, incl. drawer organizer, matching small washbasin 815961

H402112110...1

© Copyright 2023, LAUFEN Bathrooms AG | http://www.us.laufen.com/products/towel-holder-furniture-1058-H490950...0001?sku=H4909501060001

CASE

Modern bathrooms are dedicated to recreation and relaxation. A tranquil atmosphere and feeling of calm are only possible if a sense of order is created and streamlined and simple structures are revealed. In this, consistently designed bathroom furniture like case and case plus are vital: Thanks to its streamlined, compact design, “case plus” will match virtually any setting, conveying a feeling of tranquillity and calm. Furthermore, the versatile furniture matches several LAUFEN washbasin series.



© Copyright 2023, LAUFEN Bathrooms AG | http://www.us.laufen.com/products/towel-holder-furniture-1058-H490950...0001?sku=H4909501060001