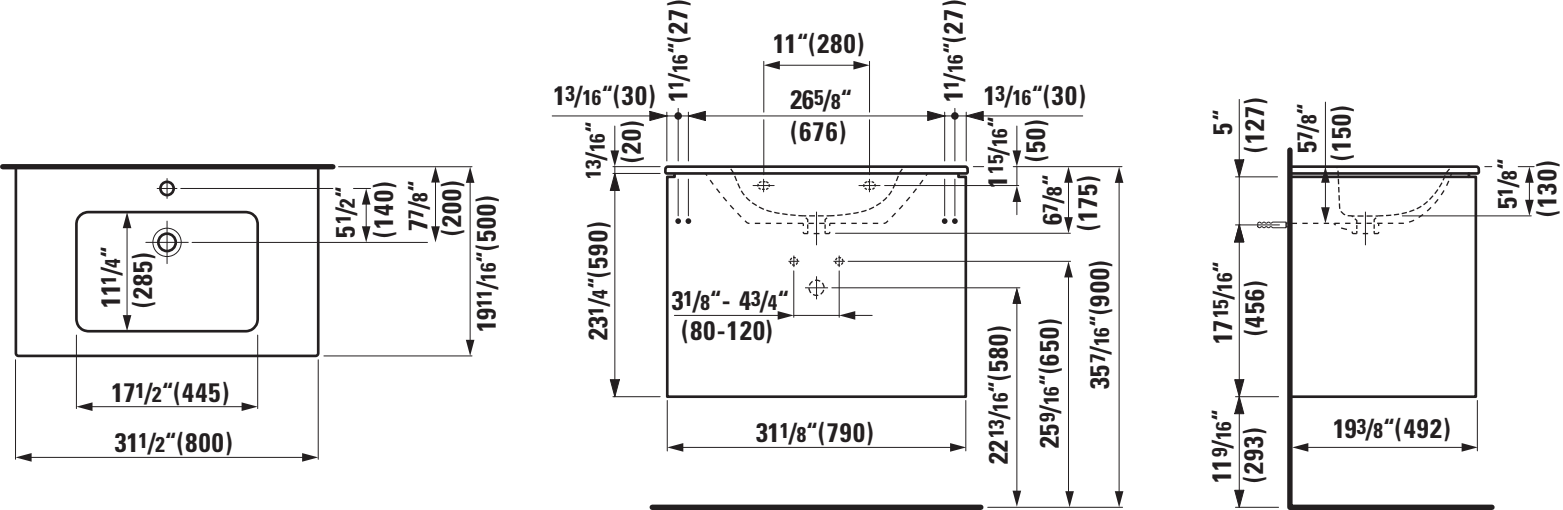
5 1/2" (140)
7 7/8" (200)
19 11/16" (500)
11 1/4" (285)
17 1/2" (445)
31 1/2" (800)
11/16" (27)
11" (280)
11/16" (27)
1 3/16" (30)
26 5/8" (676)
1 3/16" (30)
13/16" (20)
1 15/16" (50)
6 7/8" (175)
23 1/4" (590)
31 7/8" - 43 4/4" (80-120)
35 7/16" (900)
25 9/16" (650)
22 13/16" (580)
31 1/8" (790)
5" (127)
5 7/8" (150)
5 1/8" (130)
17 15/16" (456)
11 9/16" (293)
19 3/8" (492)