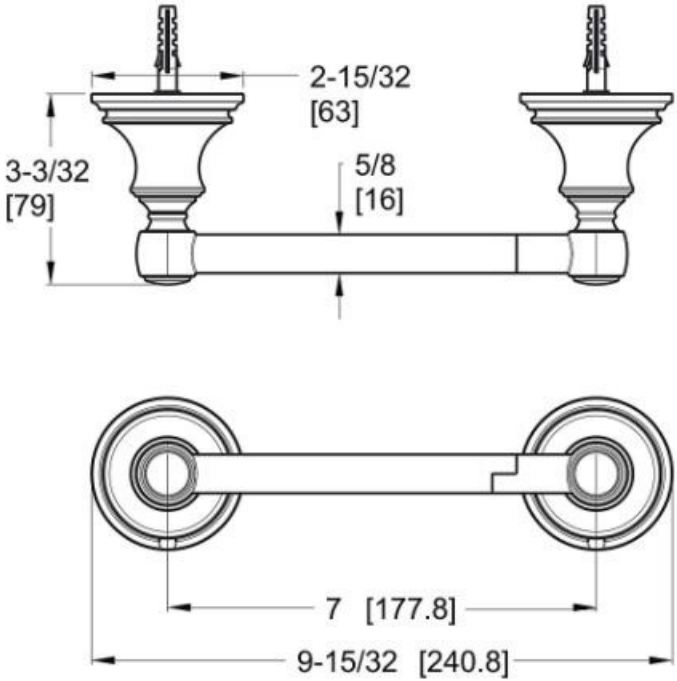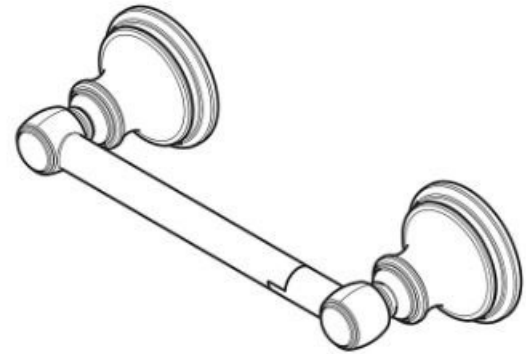
2-15/32
[63]
3-3/32
[79]
5/8
[16]
7 [177.8]
9-15/32 [240.8]