PFISTER

Stellen™

Pull Down Bar & Prep Faucet

LG572-SAB Finish*(B)* ❑
LG572-SAC Finish*(C)* ❑
LG572-SAS Finish*(S)* ❑

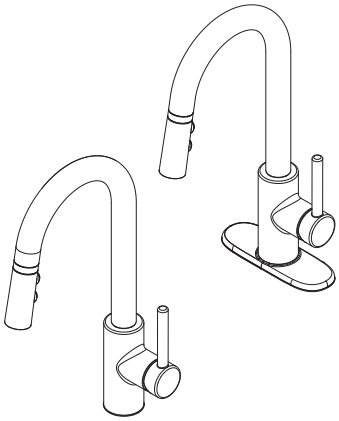

- 1 or 3-Hole Installation
- Pforever Seal

Specifications

Features

- 1.8 GPM Flow Rate
- 3 Function Pull-Down Sprayer
- 1 or 3-Hole Installation; Deck Plate or Single Hole Mounting Option
- AccuDock™ Sprayhead Docking
- Pforever Seal Ceramic Disc Valve
- Pforever Warranty®

Code Compliance

Pfister products are designed and manufactured in compliance with the following standards and codes:

- IAPMO Certified to ASME A112.18.1/CSA B125.1 including:
  - ASME A112.18.3 (Backflow Prevention)
- NSF 61/9 AnnexG Certified
- CEC Certified/CALGreen compliant
- ADA Compliant – ANSI A117.1 (Lever Handles Only)

Dimensions

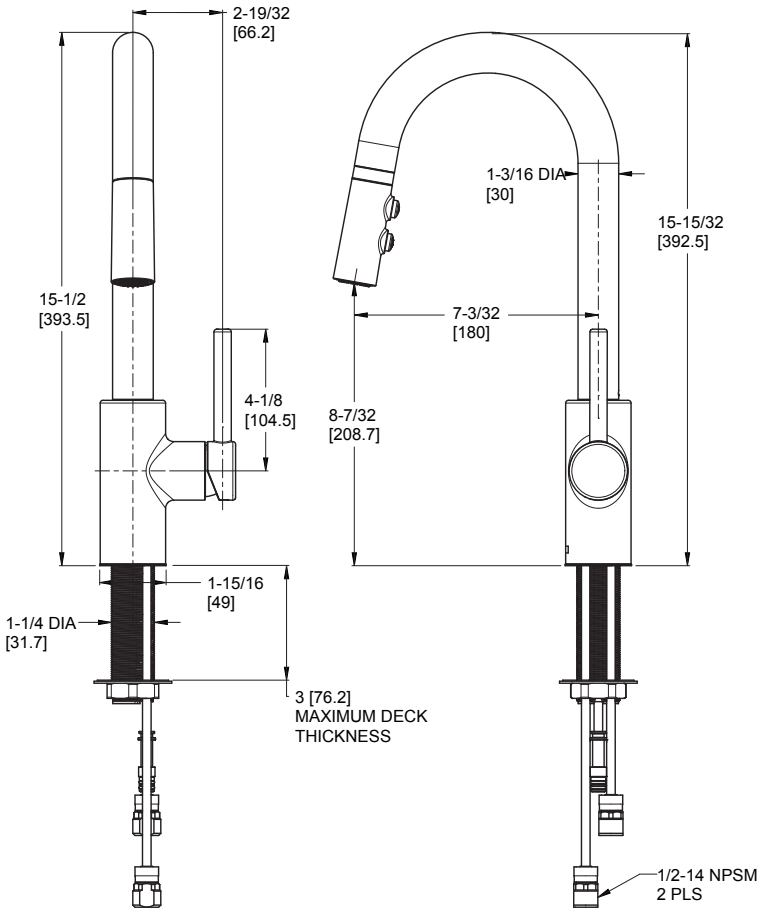

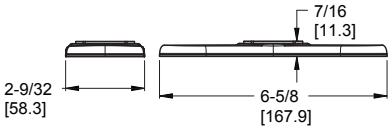

Optional Deckplate

Ø1-3/8 Min to Ø1-1/2 Max. Deck Hole Openings

Copyright © 2021, Pfister Inc.