SYD NEY Bathroom Accessories

PRODUCT SPECIFICATION SHEET

HOUSTON SERIES

MATTE BLACK (MB)

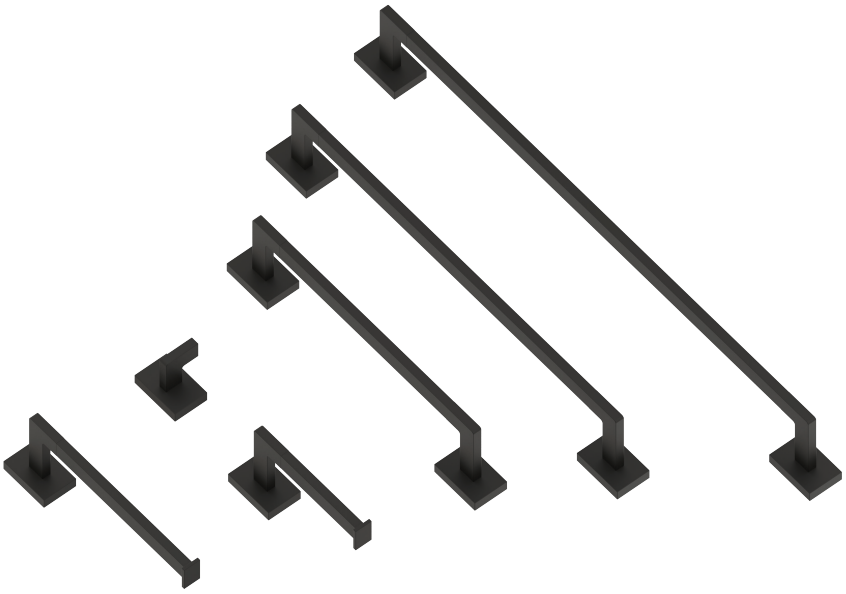

MATERIAL: ZINC
STAINLESS STEEL 304

KEY FEATURES: MODERN DESIGN
ZINC+STEEL COMPOSITION
CAST BACKINGS
WALL MOUNTED

AVAILABLE FINISHES:
- POLISHED CHROME (PC)
- BRUSHED NICKEL (BN)
- MATTE BLACK (MB)

Product Code	Name	Finishes	Sizes (mm)			Sizes (Inches)		
			Length	Width	Height	Length	Width	Height
HOU-TB9	HOU-9 Towel Bar	PC, MB	289	40	85	11 3/8	1 5/8	3 3/8
HOU-TB12	HOU-12 Towel Bar	PC, MB	365	40	85	14 3/8	1 5/8	3 3/8
HOU-TB18	HOU-18 Towel Bar	PC, MB	517	40	85	20 3/8	1 5/8	3 3/8
HOU-TB24	HOU-24 Towel Bar	PC, MB	670	40	85	26 3/8	1 5/8	3 3/8
HOU-TB30	HOU-30 Towel Bar	PC, MB	822	40	85	32 3/8	1 5/8	3 3/8
HOU-RH-1	HOU-Robe Hook	PC, MB	50	60	55	2	2 3/8	2 1/8
HOU-TPEURO	HOU-Tissue Holder	PC, MB	178	40	85	7	1 5/8	3 3/8
HOU-TR	HOU-Towel Ring	PC, MB	250	40	85	9 7/8	1 5/8	3 3/8

NOTE: Dimensions and specifications are subject to change without notice.

SYDNEY Bathroom Accessories

9″/12″/18″/24″/30″ Towel Bar
HOU-TB9/TB12/TB18/TB24/TB30-PC

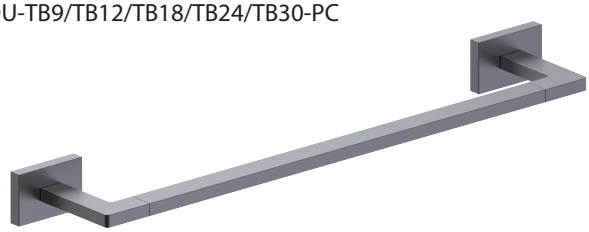

Robe Hook
HOU-RH-1-PC

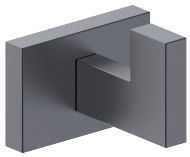

Tissue Holder
HOU-TPEURO-PC

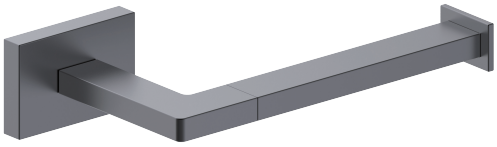

Towel Ring
HOU-TREURO-PC

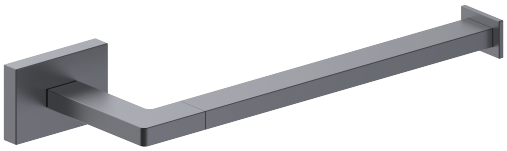

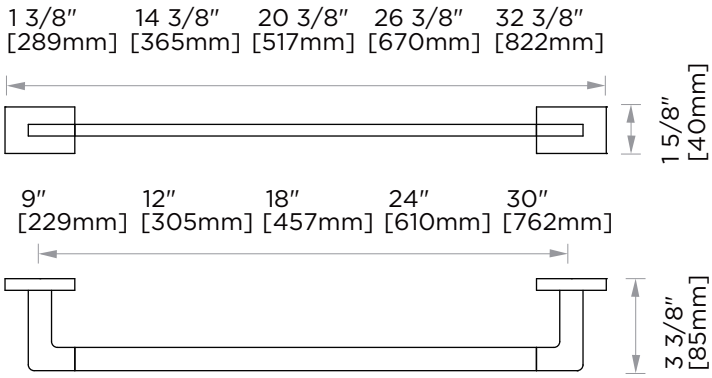

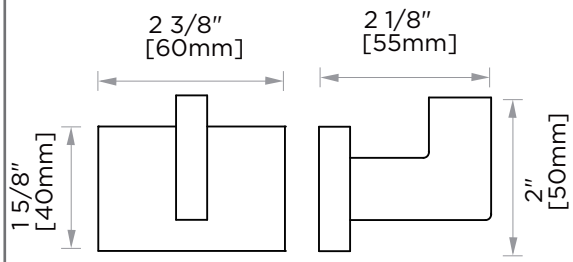

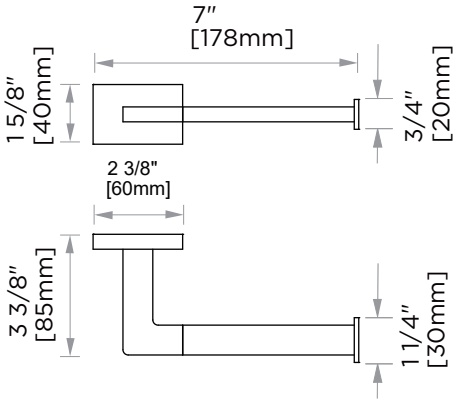

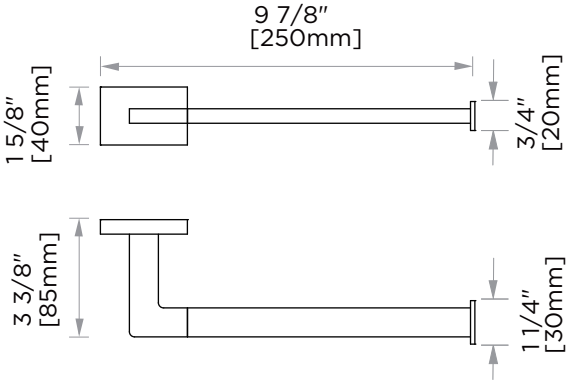

NOTE: Dimensions and specifications are subject to change without notice.