Z-Vent Concentric Dimensional Spec Sheet

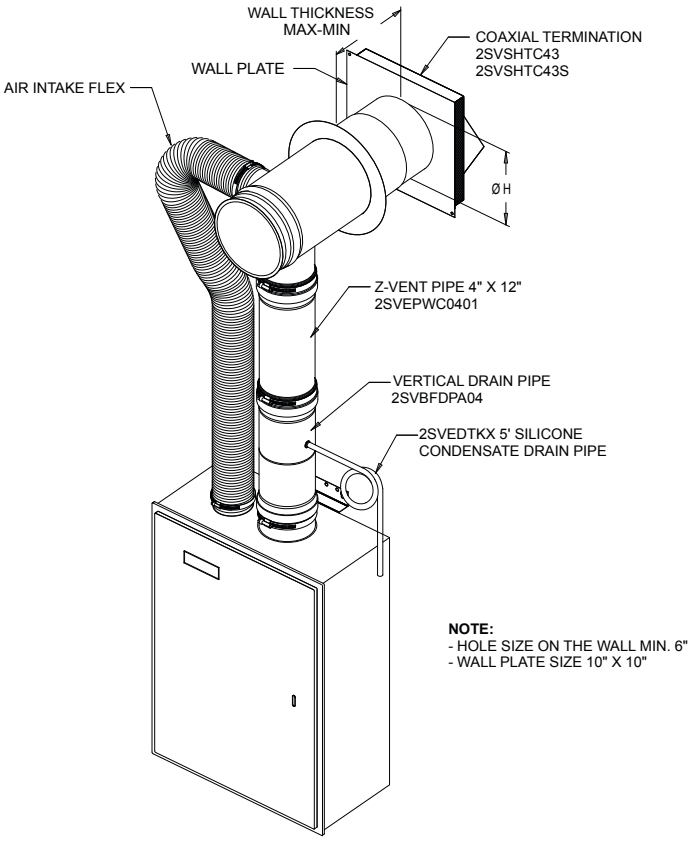

Wall Thickness	H	Part ID	Description
12.25″ - 19.25″	5.80″	2SVSHTC43	Z-Vent 4/3 in Coaxial Termination
6.75″ - 13″	5.80″	2SVSHTC43S	Z-Vent 4/3 in Coaxial Termination Short

Canada: 452 Attwell Drive, Etobicoke, ON M9W 5C3 tel: 416.679.0045 • fax: 416.679.0051
U.S.A.: 20 Commerce Park North, Bedford, New Hampshire 03110 tel: 603.669.5136 • fax: 603.669.0309 • 800.654.5600