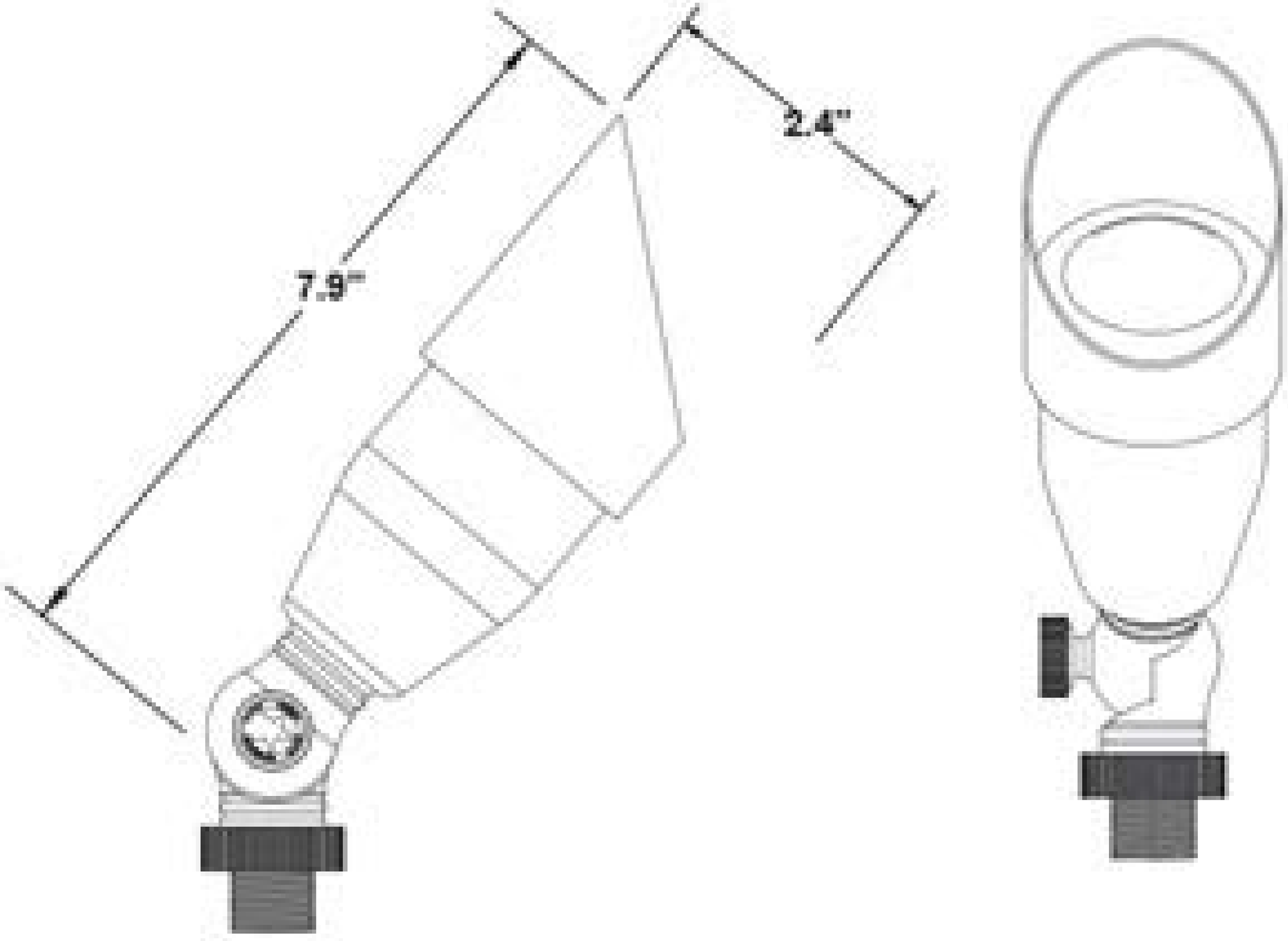
2.4"
7.9"