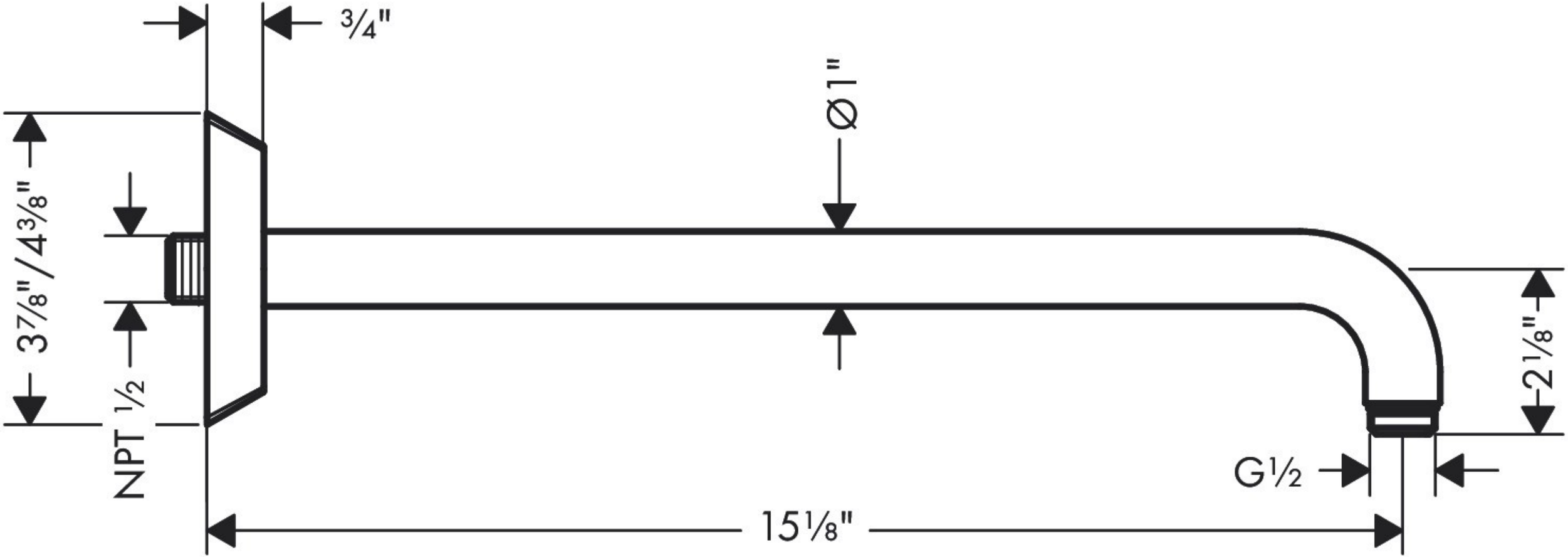
3/4"
Ø1"
3 7/8"/4 3/8"
NPT 1/2
2 1/8"
G1/2
15 1/8"