Brand	hansgrohe
Art. Name	**Raindance S** Showerhead 300 1-Jet, 2.5 GPM
Art. Nr.	27493001
Surface	Chrome

Product Picture



Drawing

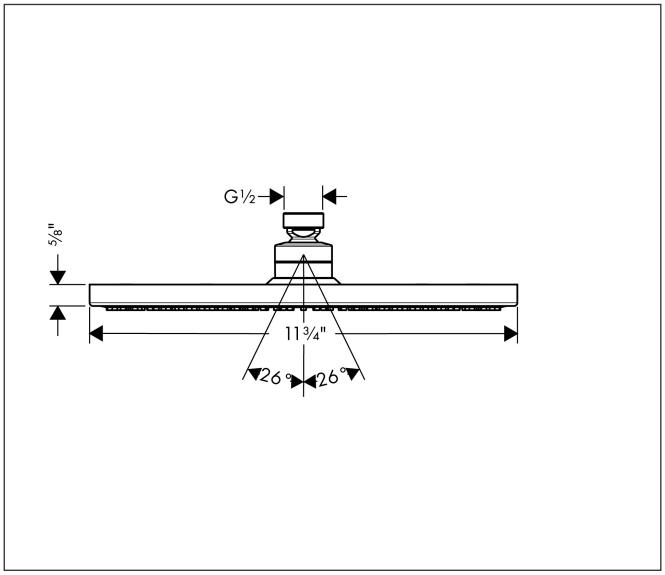

Features

- consists of: showerhead
- showerhead size: 11 7/8"
- spray type: RainAir
- Max. flow rate: 2.5 GPM
- spray disc surface: fully finished matching spray face
- spray disc removable for cleaning
- suitable for continuous flow water heaters

Technology

XXL Performance

AirPower

Quick Clean

Spray Types

Rain Air

Certicates/approvals

EPD

UPC

Brand	hansgrohe
Art. Name	**Raindance S** Showerhead 300 1-Jet, 2.5 GPM
Art. Nr.	27493001
Surface	Chrome

Required parts (choose one)

Product Picture	Art. Name	Art. Nr.
	hansgrohe Showerarm Raindance 15"	27413001
	hansgrohe Showerarm 9"	27422001
	hansgrohe Extension Pipe for Ceiling Mount	27393001
	hansgrohe Showerarm Standard 9"	04186003