Brand	hansgrohe
Art. Name	**Bodyvette** Bodyspray with Stop
Art. Nr.	28467001
Surface	Chrome

Product Picture



Drawing

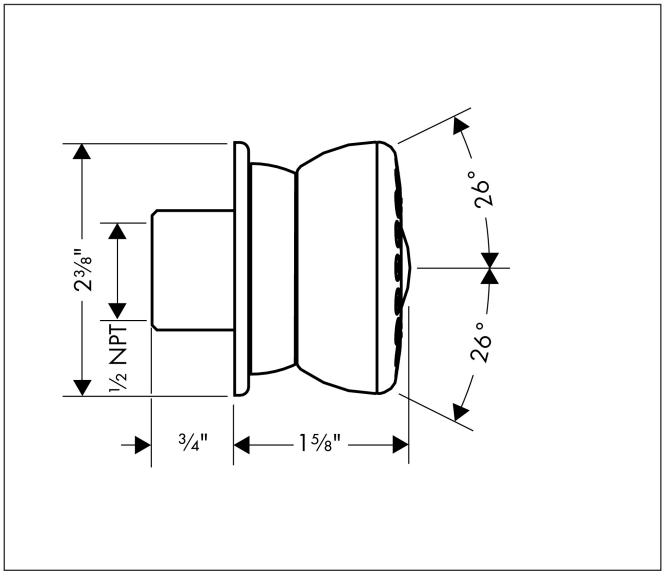

Features

- showerhead size: 2 3/8″
- Pause feature slows flow to trickle
- Max. flow rate: 2.5 GPM
- connecting thread: ½″ NPT
- material: metal

Technology

Quick Clean

Spray Types

Rain

Certicates/approvals

MAP ESSENTIALS

UPC