INSTRUCTIONS TO ELEVATE YOUR MOOD

MOND by vogt

Pure **Quality**. Pure **Design**.

TABLE OF CONTENTS

PRODUCT	PAGE
· Mond Lavatory Faucet With Round Spout · Mond Lavatory Faucet With Square Spout · Mond Lavatory Faucet With Curved Spout	2-17

Before you begin:

- Please take note of different standards and regulations that are dictated by your local plumbing codes. This product is certified in accordance with North American building codes.
- We insist that you use the services of a professional plumber with experience in the installation of similar fixtures.
- Ensure that the piping system is well secured to prevent rattling, vibration and banging noises caused by a water hammer. We also recommend that you use water hammer arrestors.
- Ensure that the interior of the water pipes is clean from debris, sand, solder and any other residue.
- Always remove cartridges and other valve components before welding. Purge the water supply system for around 30 seconds, and then carefully reinstall the cartridges.

Tools and equipment you will need:



A

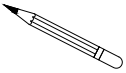

B

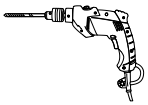

C

General Dimensions

Handle

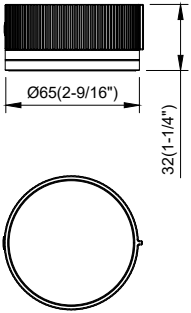

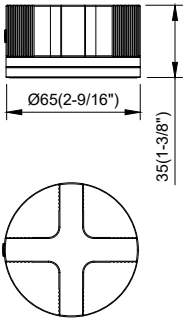

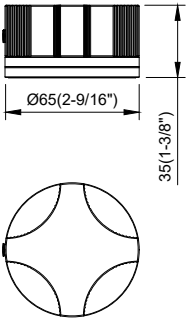

Spout

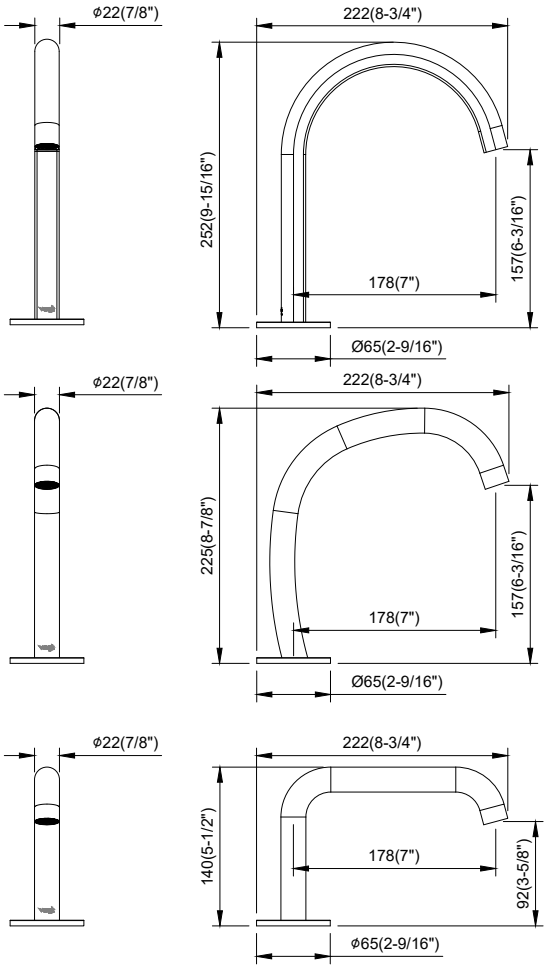
ϕ22(7/8")
222(8-3/4")
252(9-15/16")
157(6-3/16")
178(7")
Ø65(2-9/16")
ϕ22(7/8")
222(8-3/4")
225(8-7/8")
157(6-3/16")
178(7")
Ø65(2-9/16")
ϕ22(7/8")
222(8-3/4")
140(5-1/2")
178(7")
92(3-5/8")
ϕ65(2-9/16")

Service Parts

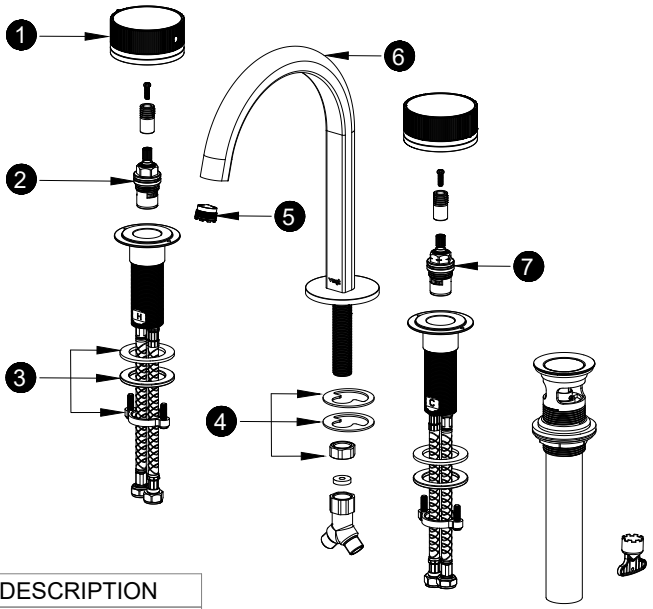

S/N	DESCRIPTION
1	Handle
2	Cartridge(H)
3	Mounting Hardware
4	Mounting Hardware
5	Aerator
6	Spout
7	Cartridge(C)

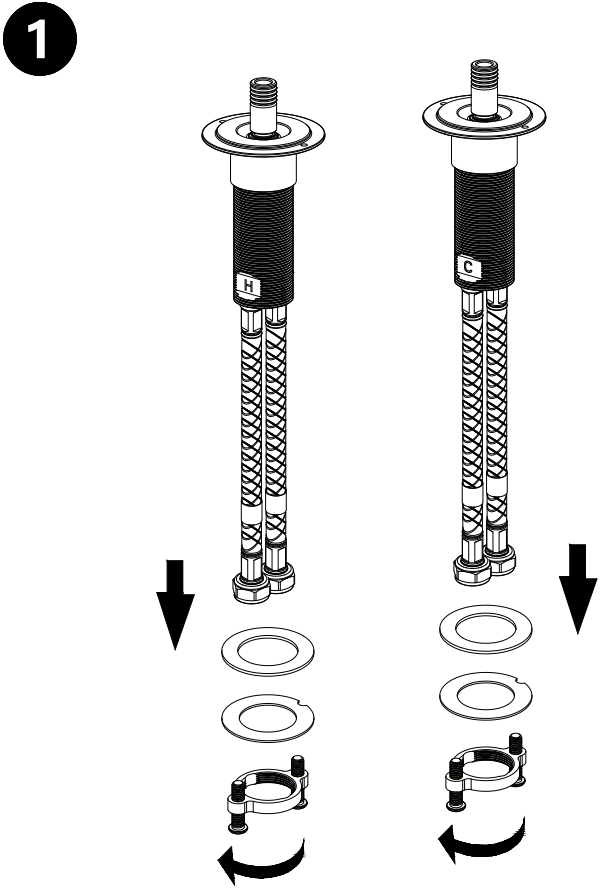
1
H
C

2

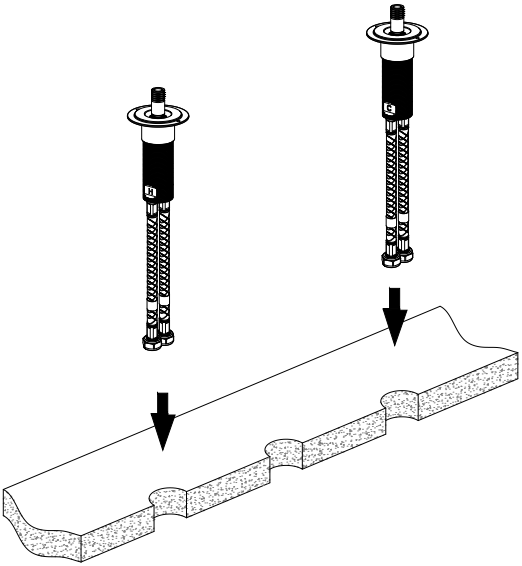

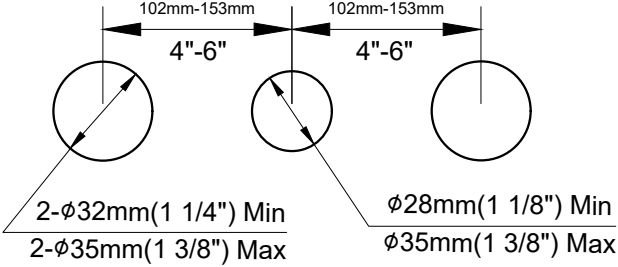
102mm-153mm
4"-6"
102mm-153mm
4"-6"
2-ϕ32mm(1 1/4") Min
2-ϕ35mm(1 3/8") Max
ϕ28mm(1 1/8") Min
ϕ35mm(1 3/8") Max

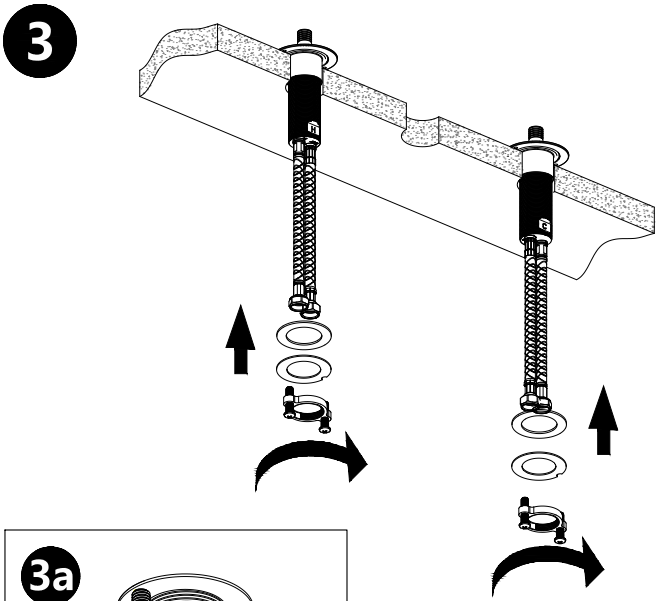
3

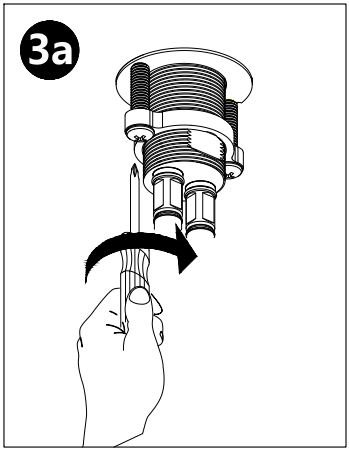
3a

4

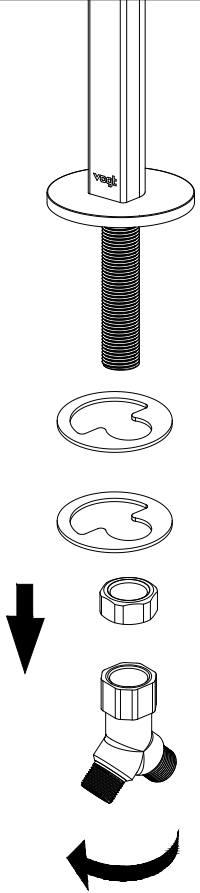

5

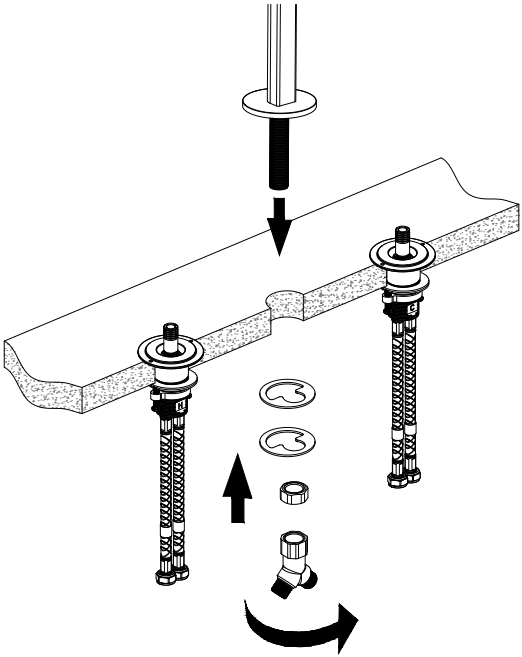

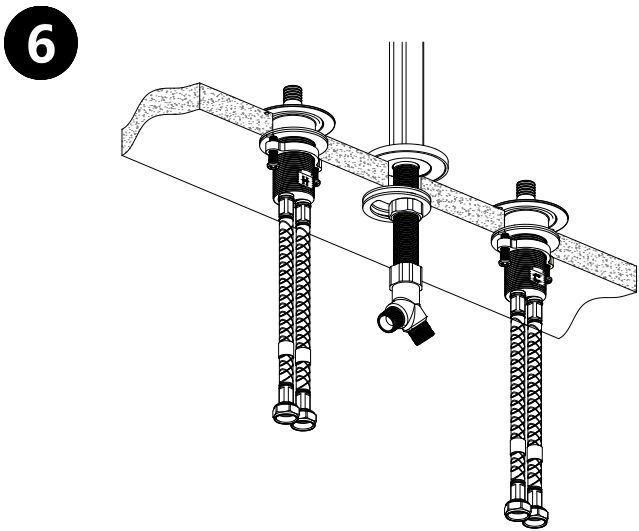
6

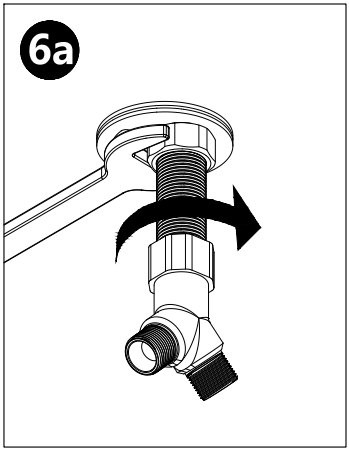
6a

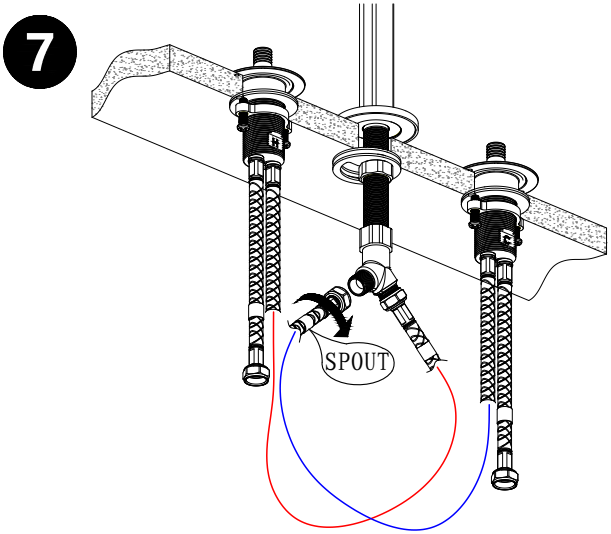
7
SPOUT

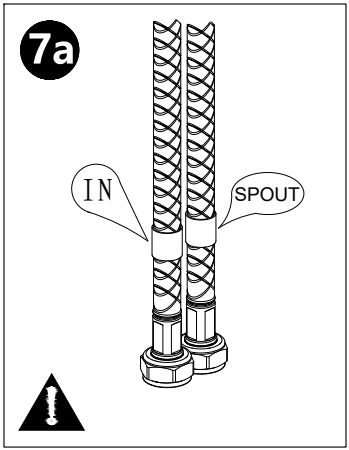
7a
IN
SPOUT

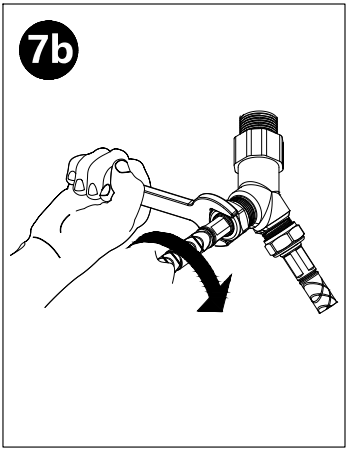
7b

8

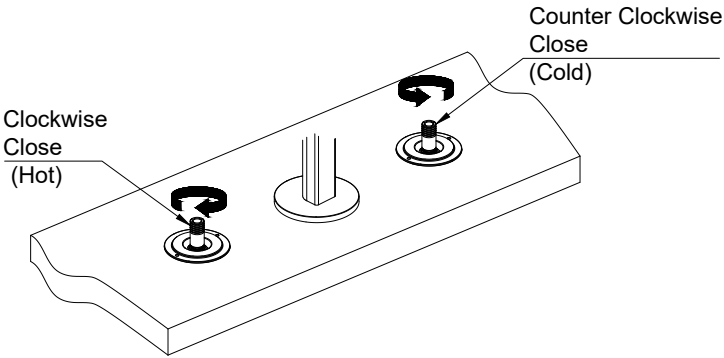

8a

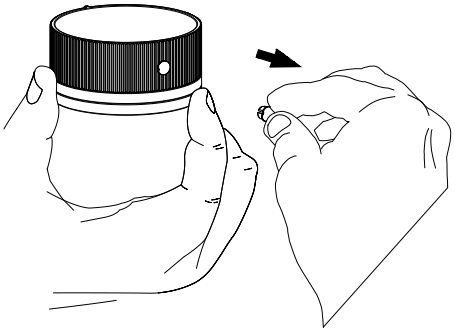

9

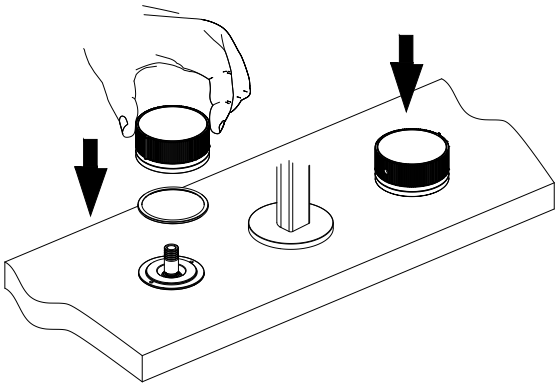

9a

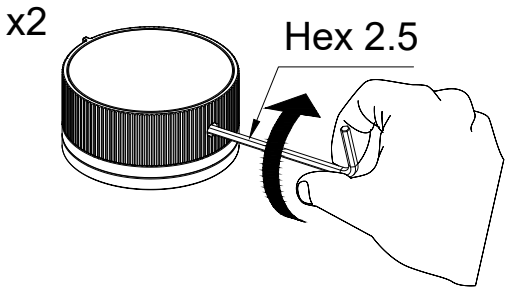

10

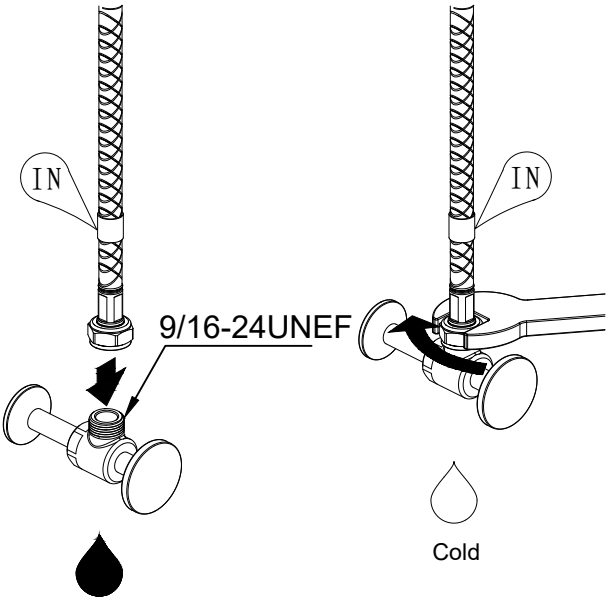

11



11a

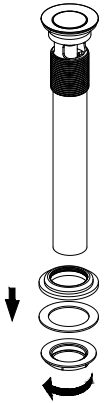

12

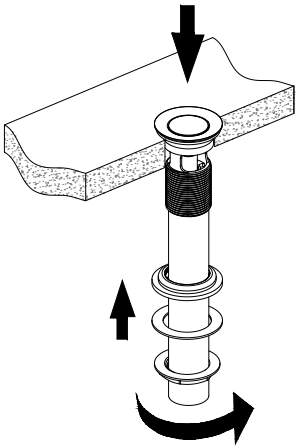

12a

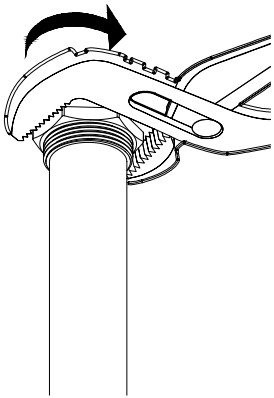

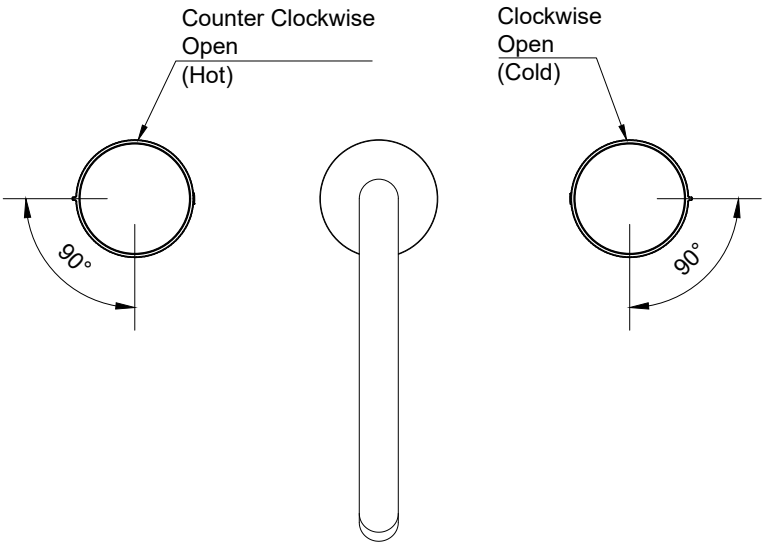
Counter Clockwise
Open
(Hot)
Clockwise
Open
(Cold)
90°
90°

Maintaining Your Vogt Finish
No matter which finish you select, here are a few simple steps to keep your Vogt kitchen and bath fixtures looking beautiful for years:

- Daily: wipe the fixture dry with a soft cloth after each use — this is the single most important care you can give any finish!
- Occasionally: use a mild clear liquid soap with a neutral PH balance and water to gently clean your faucet. Do not use any abrasive chemicals
- When necessary: a 50/50 solution of vinegar and water can be applied to remove hard water deposits. Do not soak the product in the solution. Vinegar is a mild acid which will harm the finish with prolonged contact. Premix in squirt bottle, spray clean/rinse/wipe dry. Use a soft brush to break-up mineral deposits.
- Avoid all cleaning products that contain ammonia, bleach and alcohol. They may damage the finish. Use clear liquid soap with a neutral PH balance.

WARRANTY

VOGT offers Limited Lifetime Warranty against defects in workmanship and materials under normal residential use, care and maintenance to the original owner-purchaser with proof of purchase from an authorized **VOGT** dealer. The only acceptable proof of purchase is the original dated sales receipt. This warranty extends to the original owner and is not transferable to a subsequent owner of the residence where products are installed.

Subject to the Warranty Service provision below, if the original owner reports the product to **VOGT** or authorized **VOGT** dealer, within the warranty period, as being defective, **VOGT** will provide replacement parts free of charge or will replace the product (with a product of equal value) at the location of the purchase at the option of **VOGT**. **VOGT** reserves the right to inspect the product reported to be defective prior to any action. Replacement cost excludes transportation/shipping fees and any labour costs for the removal or reinstallation of the product, and as such, it is the responsibility of the owner-purchaser to provide access to the product and cover any related cost.

Limitations:
This warranty shall not apply to instances of incorrect operating procedures, breakages or damages caused by fault through improper handling, installation, carelessness, abuse, misuse, misapplication, commercial application, improper maintenance/cleaning or alteration of the product, scratches due to use, normal wear and tear, as well as chemical or natural corrosion, accident, fire, flood, an act of God, or any other casualty. Avoid abrasive cleaners, steel wools, and harsh chemicals as these will scratch, corrode and damage the product, and void this warranty. Warranty does not cover outdoor use.

The owner of the product covered by the present warranty is entirely responsible for its proper installation and any applicable plumbing or electrical wiring. **VOGT** neither installs nor supervises the installation nor hires a contractor for this purpose; consequently, **VOGT** cannot be held responsible for any default, breakage, or damages caused thereby or resulting thereof, either directly or indirectly.

This warranty does not apply to products that have not been installed or operated in accordance with instructions supplied by **VOGT** and all applicable rules, regulations, and legislation pertaining to such installations. This warranty does not apply unless **VOGT** product is installed by a certified master plumber. **VOGT** strongly recommends that such licensed professionals have experience in the installation of similar bathroom and kitchen products.

VOGT warranty obligation shall be discharged upon tender of replacement or repair. The customer's refusal to accept the tender terminates **VOGT** warranty obligations. In any case, **VOGT** cannot be held liable for any amount over and above the purchase price paid for the product by the owner, contractor, or builder.

Disclaimer:
Neither the distributor, nor authorized **VOGT** dealer, nor any other person has been authorized to make any affirmation, representation, or warranty other than those contained in this warranty.

VOGT reserves the right to modify this warranty at any time, it being understood that such modifications will not alter the warrant conditions applicable at the time of sale of the products in question.

Warranty Service:

To obtain warranty service, please call toll free at **1.888.215.8648** ext. **500** or email us at **service@vogtindustries.com**.
Proof of purchase, product information and a description of the issue must be included in all claims.

SCAN
TO LEARN
MORE

vogtindustries.com