VOGTINDUSTRIES.COM

TABLE OF CONTENTS

- **FREE-STANDING TUB FILLER** 3
- **TUB FILLER WITH RISERS** 16

Before you begin:

- Please take note of different standards and regulations that are dictated by your local plumbing codes. This product is certified in accordance with North American building codes.
- We insist that you use the services of a professional plumber with experience in the installation of similar fixtures.
- Ensure that the piping system is well secured to prevent rattling, vibration and banging noises caused by a water hammer. We also recommend that you use water hammer arrestors.
- Remove the cartridge and purge the water supply system for around 30 seconds. Then carefully reinstall the cartridge.
- After installation,check and ensure that there are no leaks.

Freestanding tub filler

****

Tools and equipment You will need:

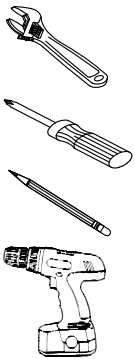

Estimated assembly time



+/- 120 Min

Reference



Hot water



Cold water



Grease



Warning



Sealant tape

FREE-STANDING TUB FILLER

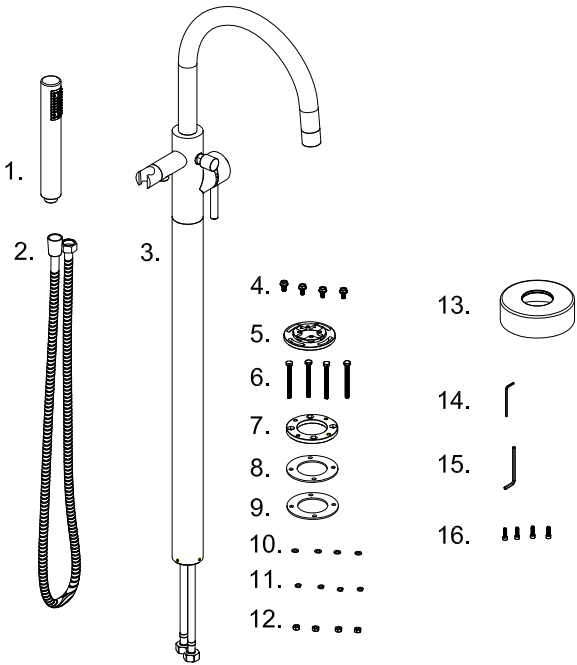

1. Shower Handle
2. Hose
3. Body
4. Screw
5. Fixture Plate
6. Screw
7. Flange
8. Rubber Washer
9. Metal Washer
10. Washer
11. Spring Washer
12. Nut
13. Flange Cover Plate
14. 2.5 Hex Wrench
15. 6.0 Hex Wrench
16. Screw

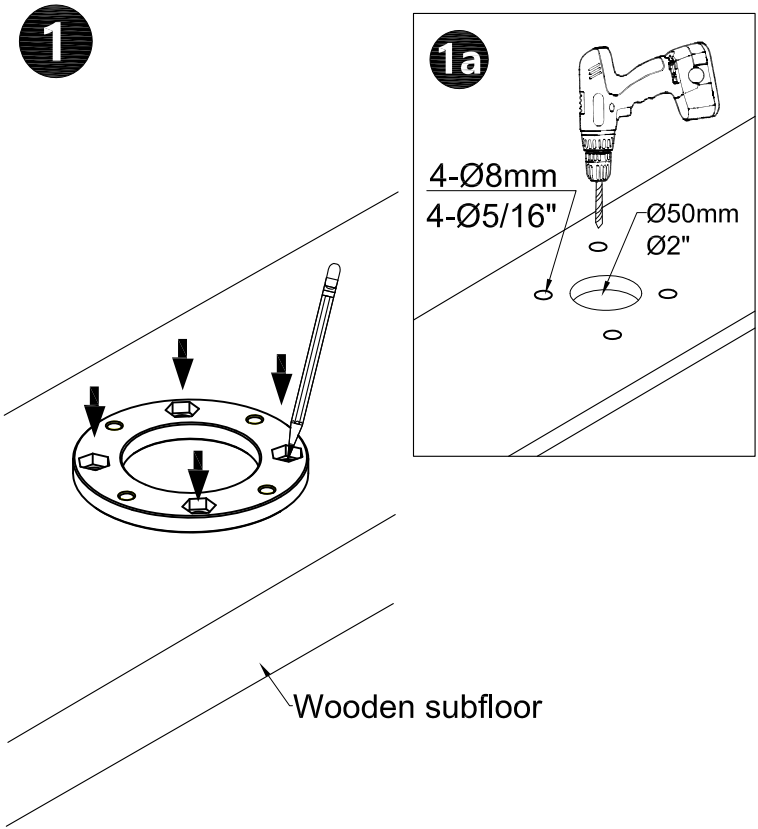
1
1a
4-Ø8mm
4-Ø5/16"
Ø50mm
Ø2"
Wooden subfloor

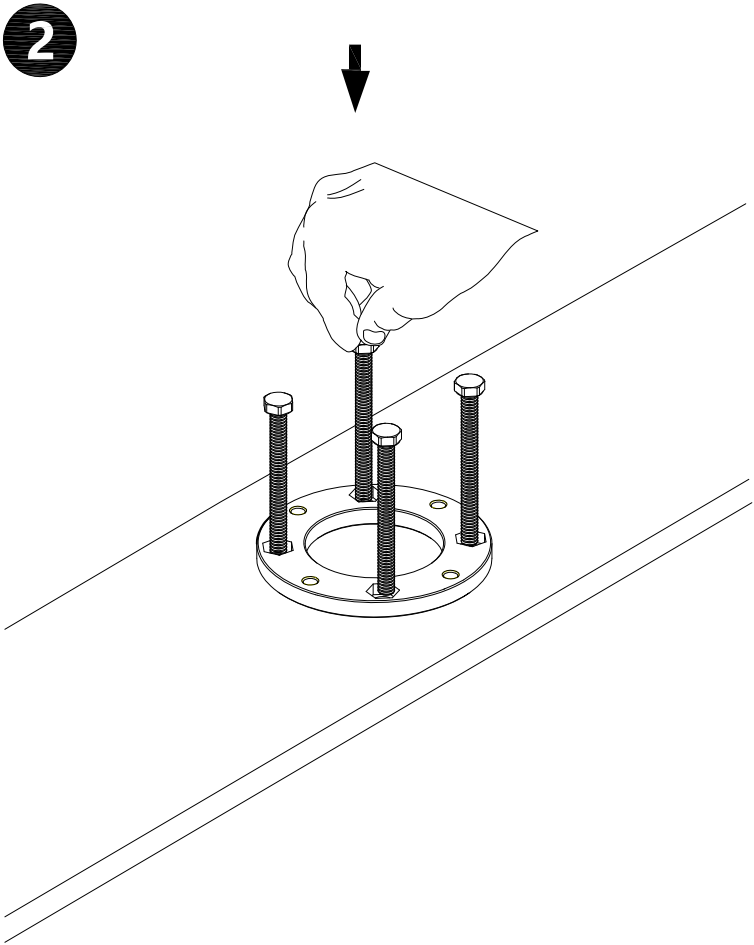
2

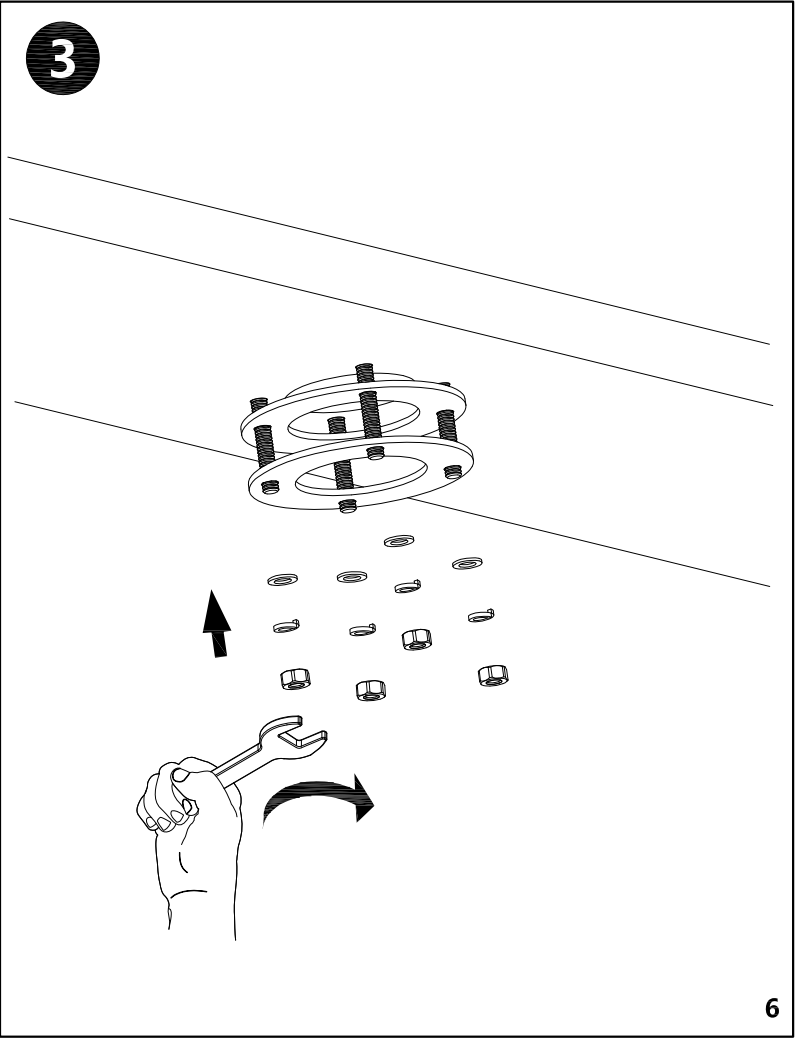
3

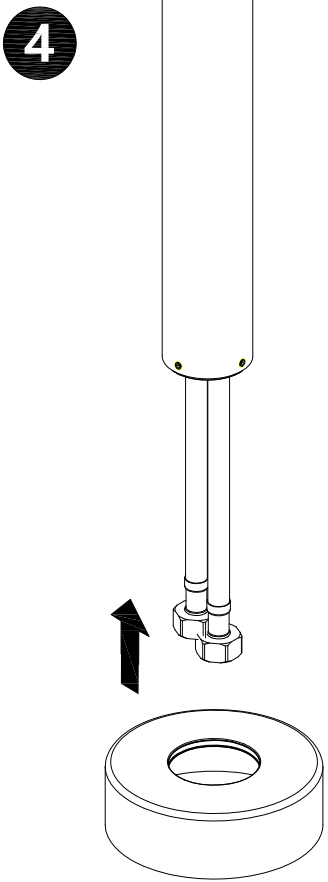
4

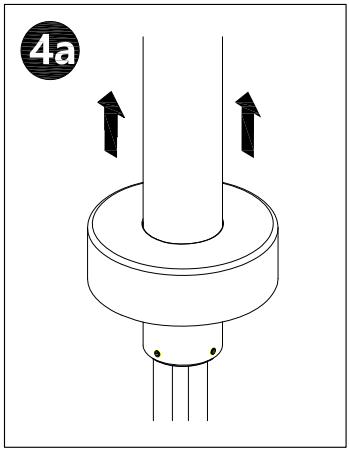
4a

5

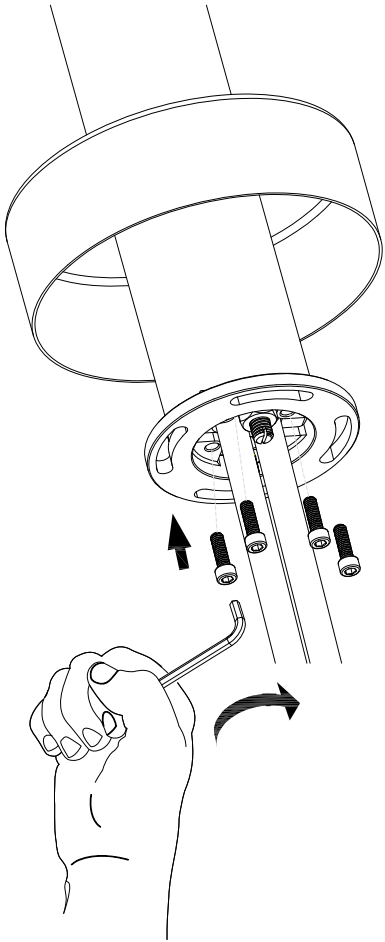

6

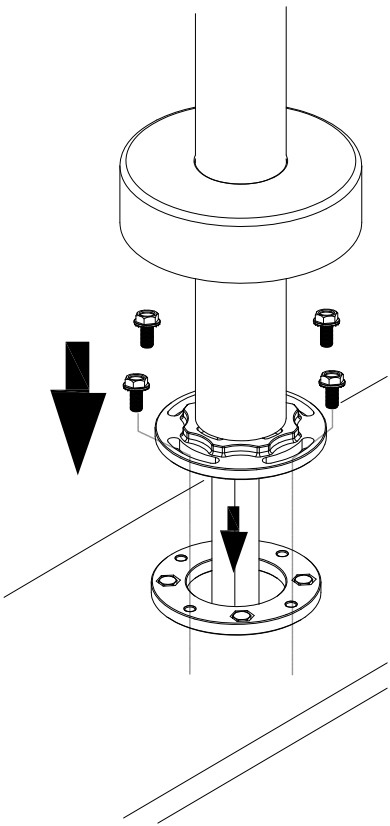

6a

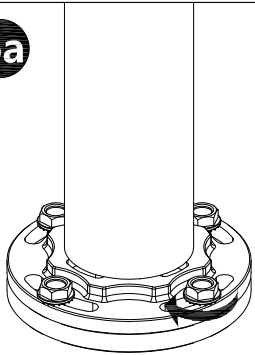

6b

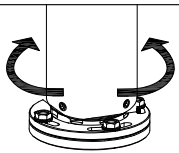

Adjust the spout direction, then lock screws

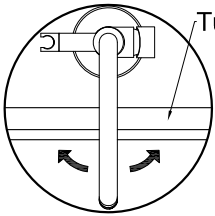

7

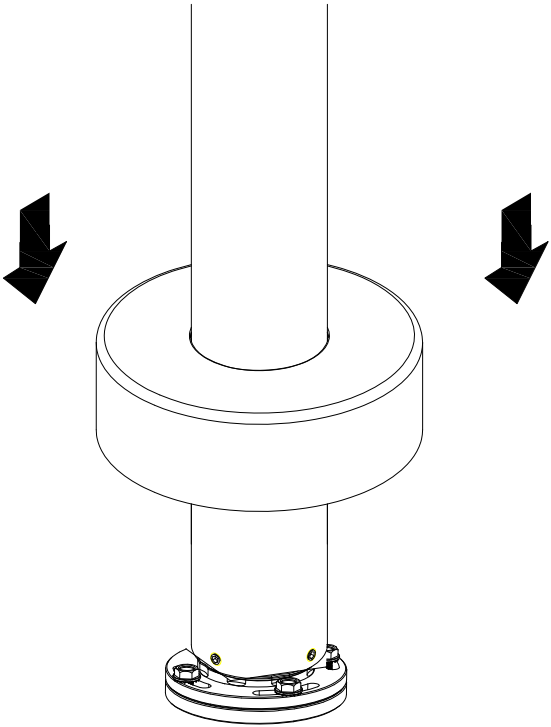

8

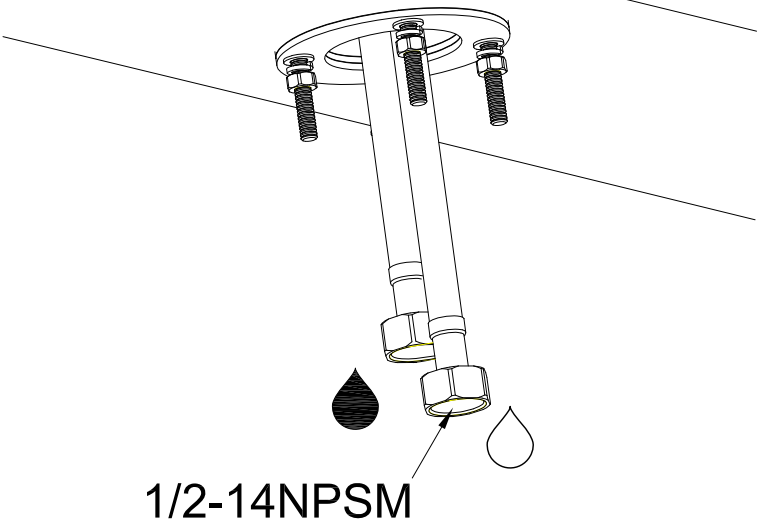

9

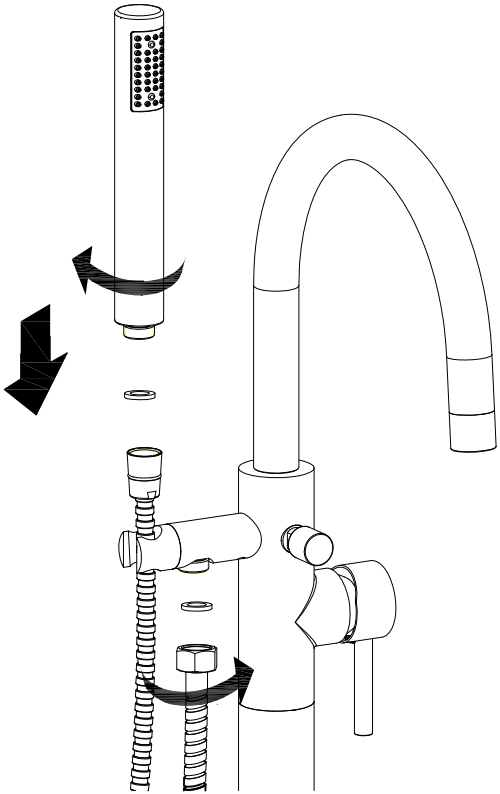

10

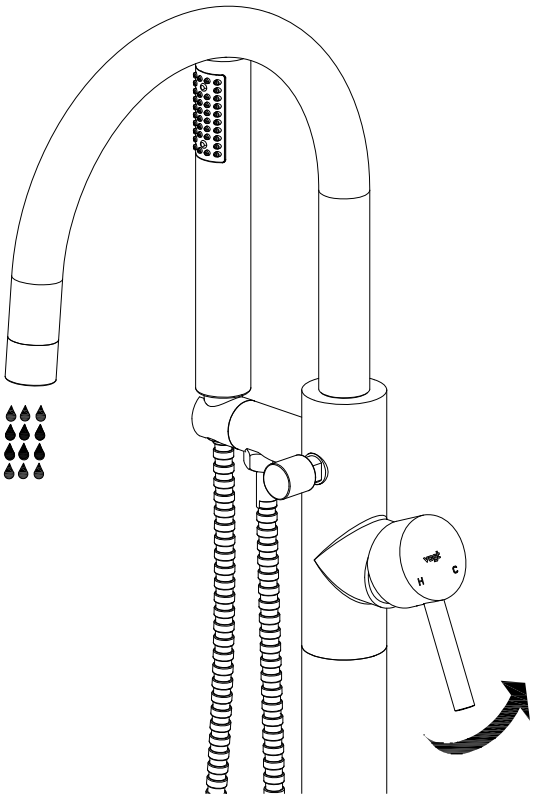

11

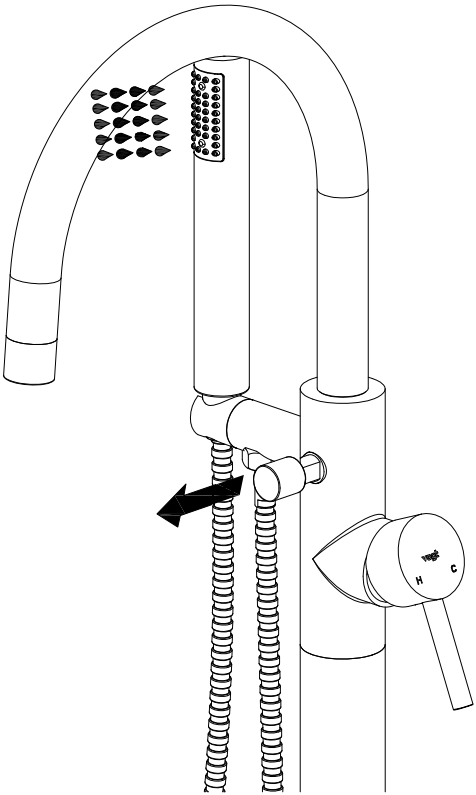

12

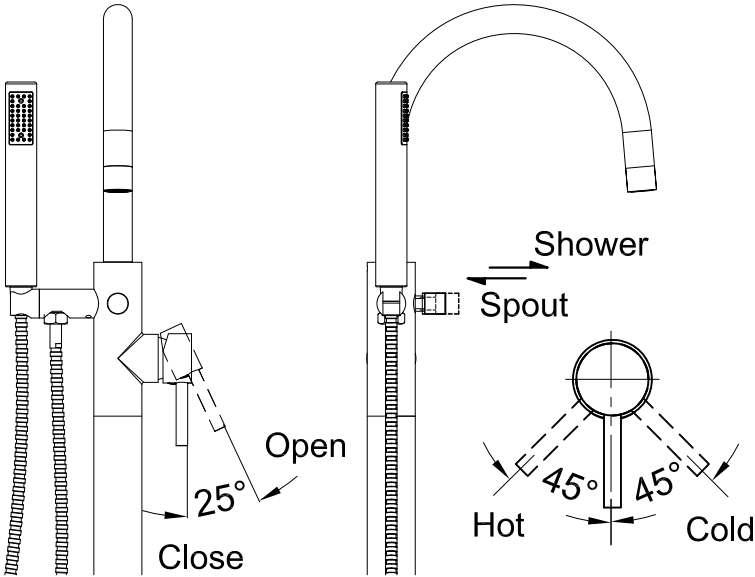

TUB FILLER WITH RISERS

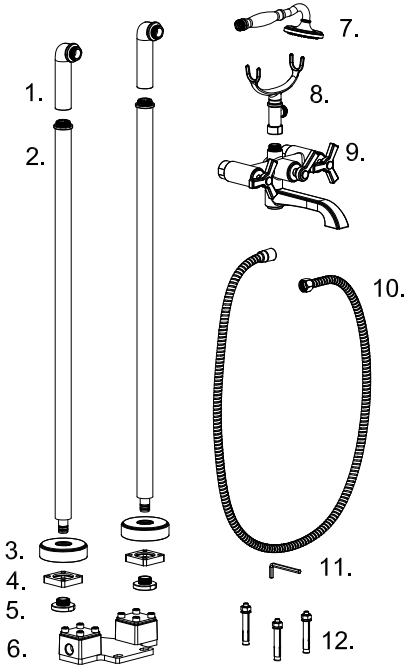

1. Inlet tube
2. Risers
3. Flange Cover Plate
4. Flange
5. Pressure Plate
6. Rough-In
7. Hand shower
8. Holder
9. Valve
10. Hose
11. Hex Wrench
12. Expansion Screw

1

1a

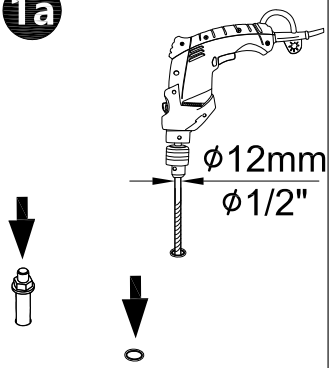

Finished Floor

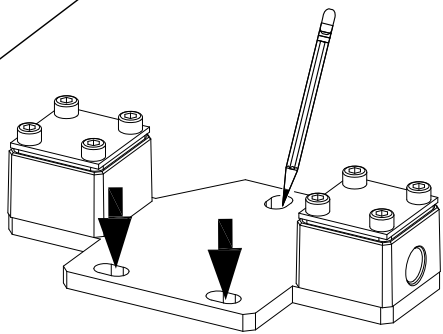

2

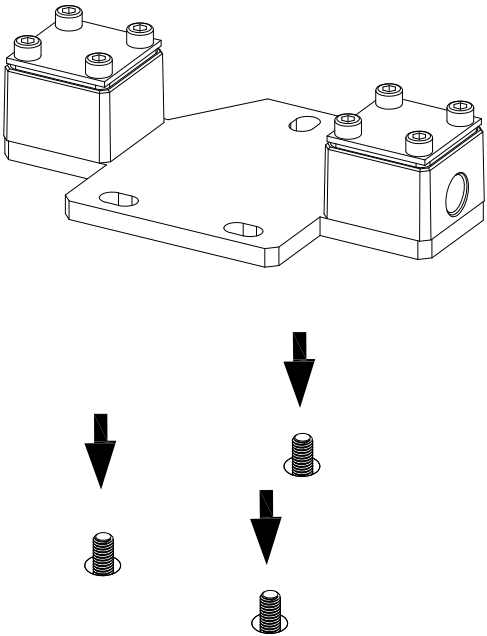

3

3a

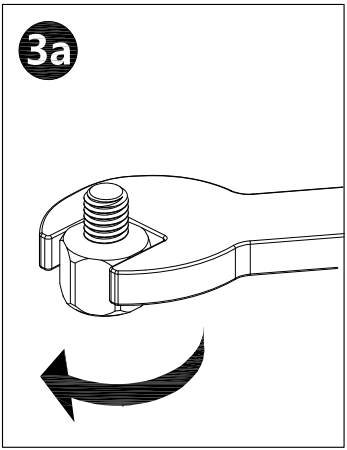

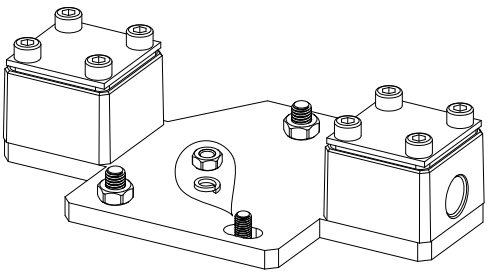

4

4a

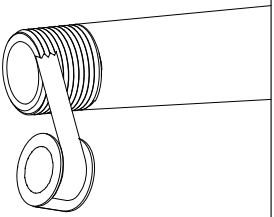

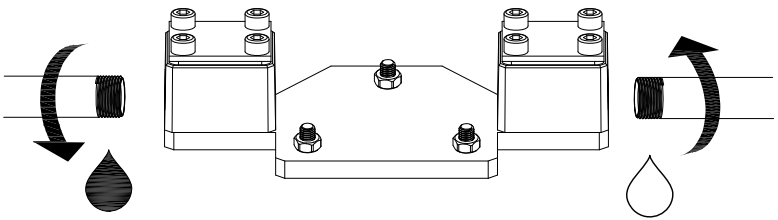

5

5a

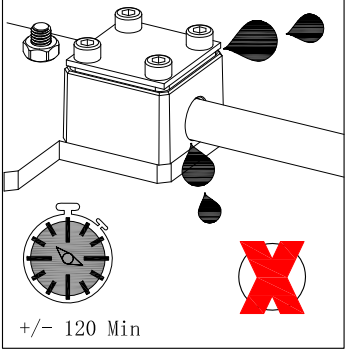

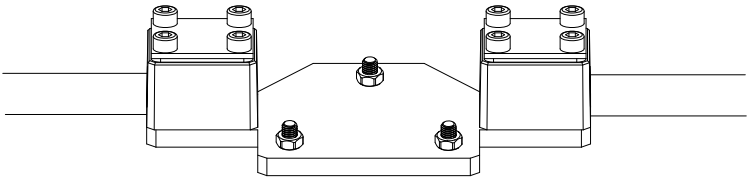

6

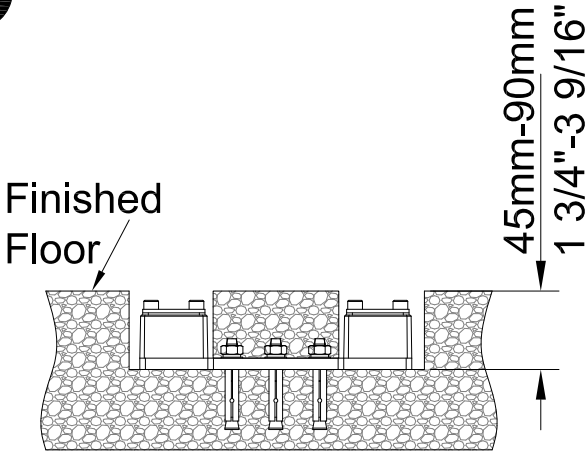

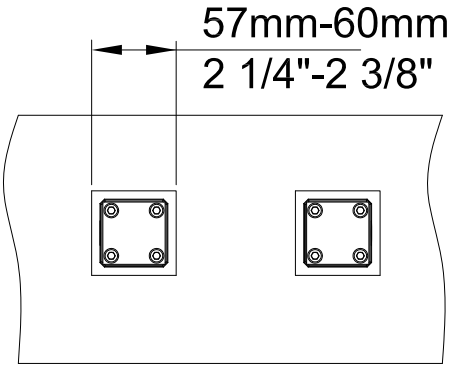

7

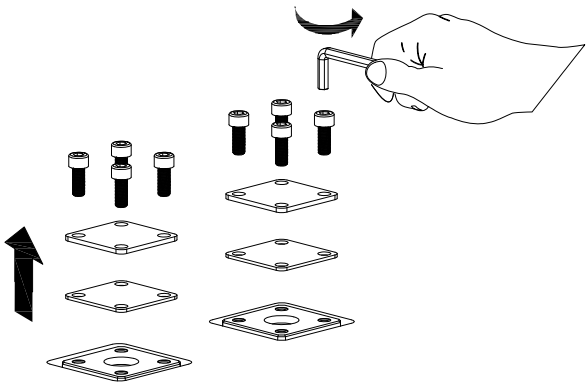

8

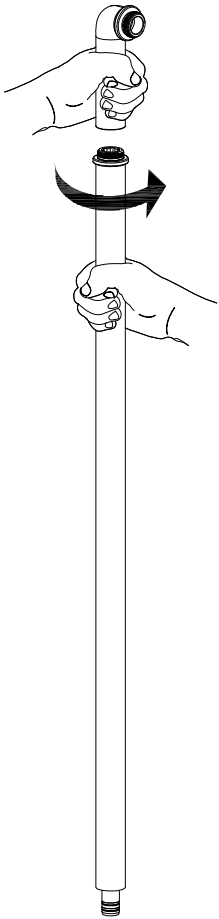

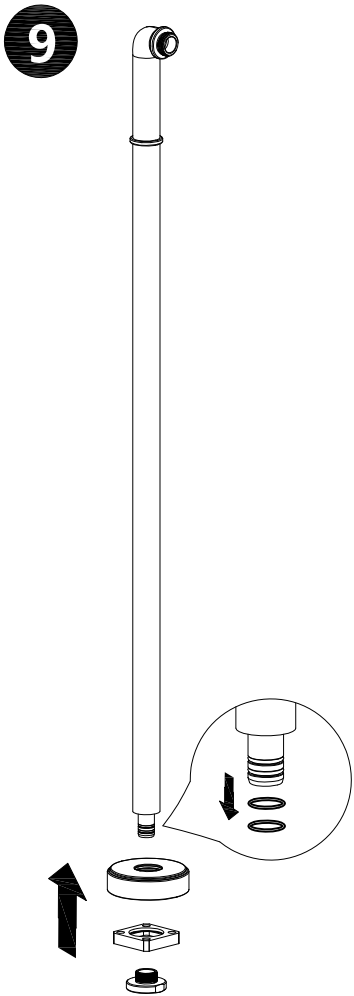
9


9a
Be careful
with the finish

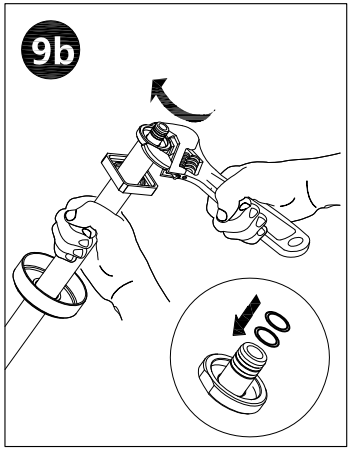
9b

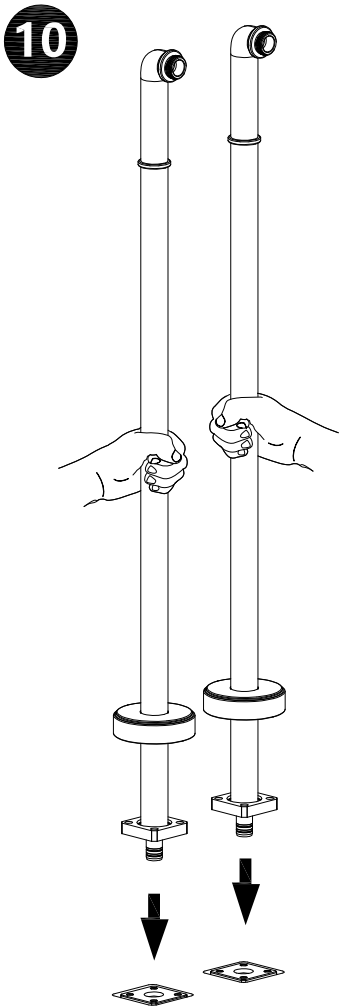
10

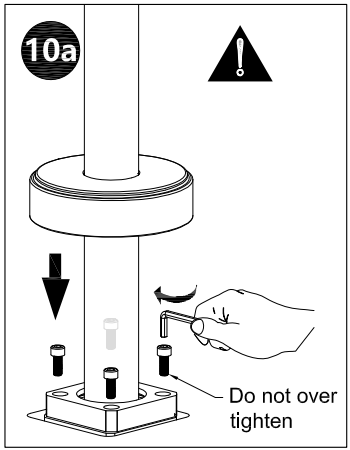
10a
Do not over
tighten

11

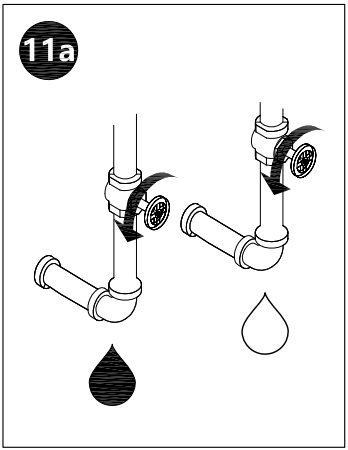

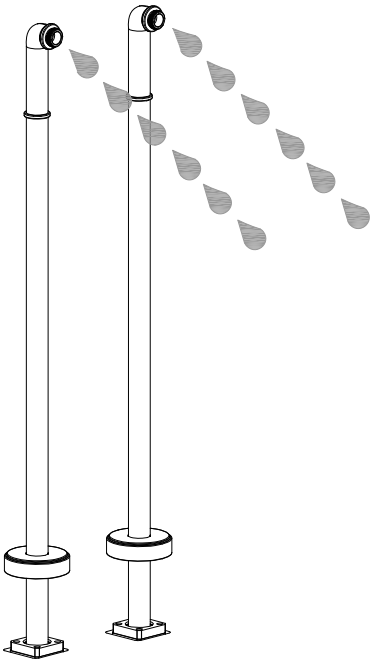

Once the welding is finished, purge the water supply system for around 30 seconds.

12

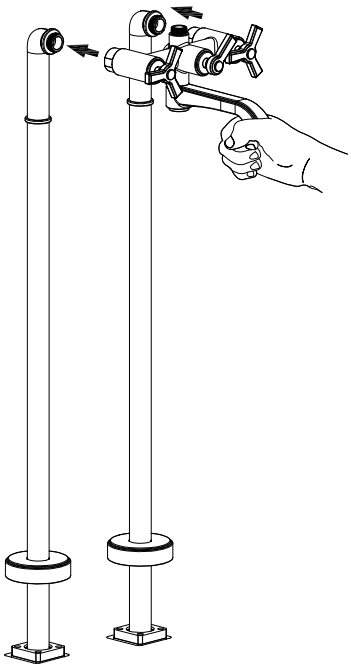

12a

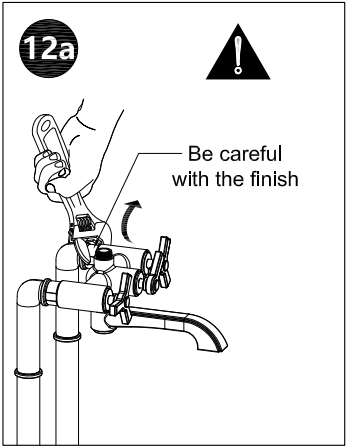

12b

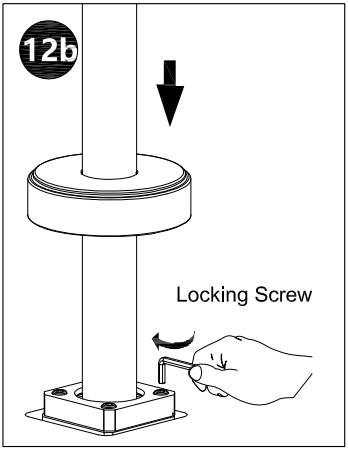

13

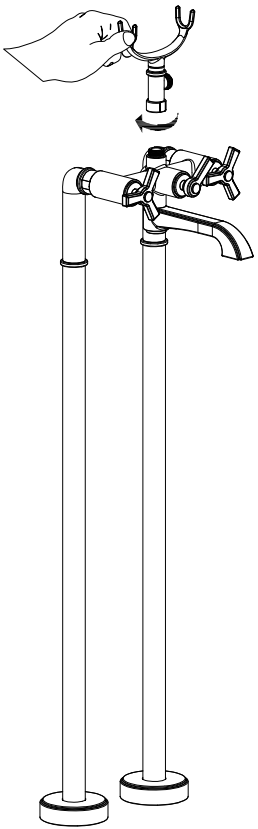

13a

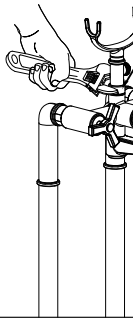

14

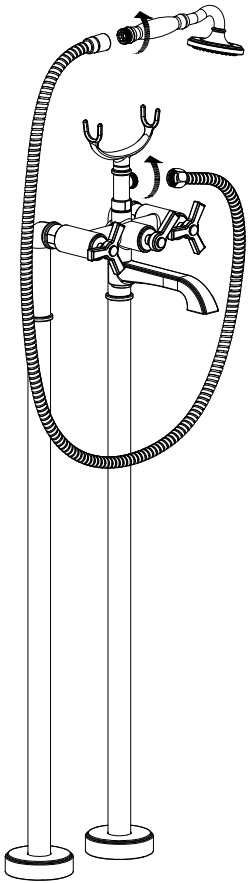

15

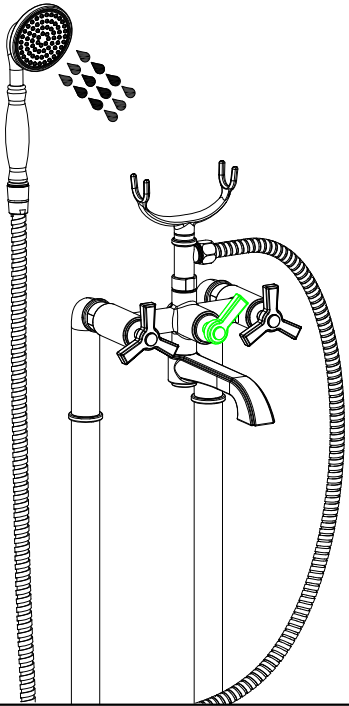

16

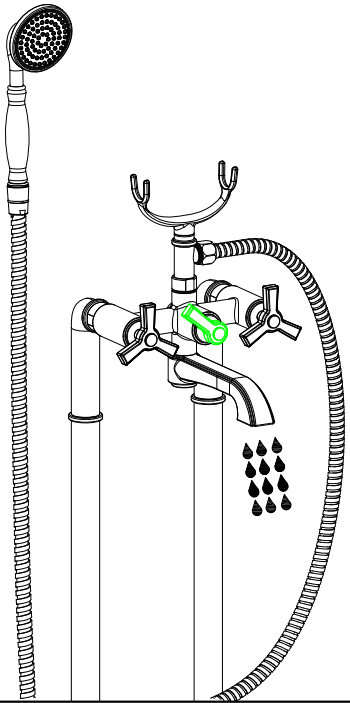

17

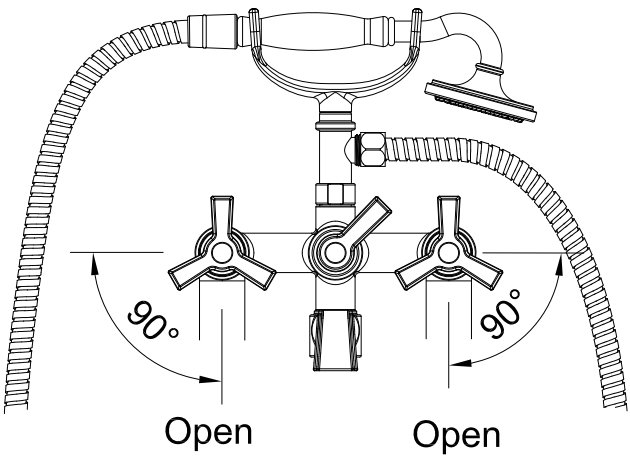

Notes

WARRANTY

VOGT INDUSTRIES ("VOGT") offers the following warranty program for its products:

Kitchen and Bathroom Faucets:	
Ceramic Disk Cartridge	Limited Lifetime Warranty*
Components (springs, hoses, hand sprays, finishes, other components)	3 Year Limited Warranty*
Shower Systems:	
Valve, cartridges (pressure balanced, thermostatic)	Limited Lifetime Warranty*
Components (springs, hoses, hand showers, sliding bars, showerheads, water spouts, finishes, other components)	3 Year Limited Warranty*
Accessories:	
Kitchen Accessories (strainers, waste fittings, bottom grids, soap dispensers, deck cover plates, other accessories)	1 Year Limited Warranty*
Bathroom Accessories (pop-up drains, drain plugs, soap dispensers, deck cover plates, shower extensions, other accessories)	1 Year Limited Warranty*
Finishes:	
Chrome (CC)	Limited Lifetime Warranty*
All other finishes	5 Year Limited Warranty*

*VOGT warrants, to the original owner-purchaser, the product to be free from defects in workmanship and materials under normal residential use and service for the period specified above commencing from the initial date of purchase by the original owner-purchaser from VOGT or VOGT dealer with proof of purchase. The only acceptable proof of purchase is the original dated sales receipt. This warranty extends to the original owner and is not transferable to a subsequent owner of the residence where products are installed.

Subject to the Warranty Service provision below, if the original owner reports the product to VOGT or authorized VOGT dealer, within the warranty period, as being defective, VOGT will provide replacement parts free of charge or will replace the product (with a product of equal value) at the location of the purchase at the option of VOGT. VOGT reserves the right to inspect the product reported to be defective prior to any action. Replacement cost excludes transportation/shipping fees and any labour costs for the removal or reinstallation of the product, and as such, it is the responsibility of the owner-purchaser to provide access to the product and cover any related cost.

Limitations:
This warranty shall not apply to instances of incorrect operating procedures, breakages or damages caused by fault through improper handling, installation, carelessness, abuse, misuse, misapplication, commercial application, improper maintenance/cleaning or alteration of the product, scratches due to use, normal wear and tear, as well as chemical or natural corrosion, accident, fire, flood, an act of God, or any other casualty. Avoid abrasive cleaners, steel wools, and harsh chemicals as these will scratch, corrode and damage the product, and void this warranty. Warranty does not cover outdoor use.

The owner of the product covered by the present warranty is entirely responsible for its proper installation and any applicable plumbing or electrical wiring. VOGT neither installs nor supervises the installation nor hires a contractor for this purpose; consequently, VOGT cannot be held responsible for any default, breakage, or damages caused thereby or resulting thereof, either directly or indirectly.

This warranty does not apply to products that have not been installed or operated in accordance with instructions supplied by VOGT and all applicable rules, regulations, and legislation pertaining to such installations. This warranty does not apply unless VOGT product is installed by fully insured and fully licensed professionals. VOGT strongly recommends that such licensed professionals have experience in the installation of similar bathroom and kitchen products.

VOGT warranty obligation shall be discharged upon tender of replacement or repair. The customer's refusal to accept the tender terminates VOGT warranty obligations. In any case, VOGT cannot be held liable for any amount over and above the purchase price paid for the product by the owner, contractor, or builder.

Commercial Limitations:
In addition to the above conditions and limitations, the warranty period for commercial applications or used in commercial ventures is one (1) year from the initial date of purchase by the owner, contractor, builder, designer or architect.
For general care and cleaning instructions, please visit **www.vogtindustries.com.**

Disclaimer:
Neither the distributor, nor authorized VOGT dealer, nor any other person has been authorized to make any affirmation, representation, or warranty other than those contained in this warranty.

VOGT reserves the right to modify this warranty at any time, it being understood that such modifications will not alter the warrant conditions applicable at the time of sale of the products in question.

Warranty Service:
To obtain warranty service, please call toll free at **1.888.215.8648** ext. **500** or email us at **customercare@vogtindustries.com .**
Proof of purchase, product information and a description of the issue must be included in all claims.

SERVICE CALL / WARRANTY PARTS REQUEST POLICY

Customer Care: End User Service Call/Warranty Parts Request Procedure:

The Vogt limited lifetime warranty covers parts or replacement of product should it be determined to be a manufacturer's defect. Vogt will not cover any incurred costs for removal, installation or freight charges. However, to ensure the utmost best service to our clients, we've implemented the procedure below for warranty and service requests:

It is strongly recommended that the end user should first contact the Vogt authorized dealer where the merchandise was purchased. This allows us to collect the pertinent information given that communicating with a consumer can be challenging in most cases (for example, consumers not knowing product names, model numbers, etc.). This helps us save time and prevent sending the wrong items to the consumer and allows us to get the situation rectified as quickly as possible. This procedure is in place to ensure all requests are addressed efficiently. If necessary, the Vogt Customer Care Department will contact the end user directly.

The authorized dealer may email a service call or warranty parts request to **customercare@vogtindustries.com** and provide the following information:

1. Dealer name and direct contact person with phone number.
2. Consumer name, address, phone number and email address.
3. Product name, model number and description.
4. Copy of original proof of purchase.
5. Date of installation.
6. Explanation of the situation.

Please include any photos or videos illustrating the issue if available.

We do our best to respond to all requests within 3 business days. We thank you for your cooperation and understanding.