INSTRUCTIONS TO ELEVATE YOUR MOOD

MOND by vogt

Pure **Quality**. Pure **Design**.

TABLE OF CONTENTS

PRODUCT	PAGE
· Mond Lavatory Faucet · Mond Vessel Sink Faucet · Mond Kitchen Faucet · Mond Drinking Water Faucet · Mond Free Standing Tub Filler · Mond Pot Filler	2-5
· Mond 8" Lavatory Faucet · Mond In-wall Lav Faucet · Mond In-wall Tub Filler · Mond 2-way TH shower · Mond 3-way TH shower	6-15
· Mond Towel-18" OR 24" · Mond Towel Holder · Mond Robe Hook · Mond Toilet Paper Holder	16-17
· Mond Soap Dispenser	18-19

Tools and equipment you will need:

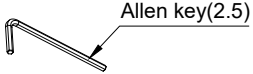

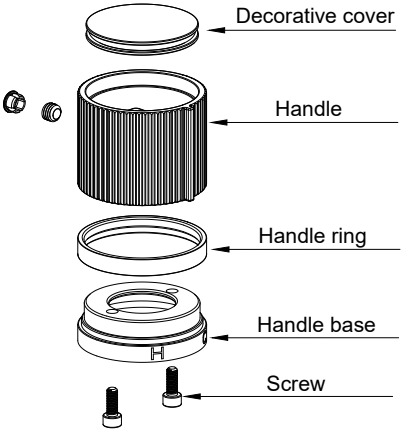
Decorative cover
Handle
Handle ring
Handle base
Screw

1

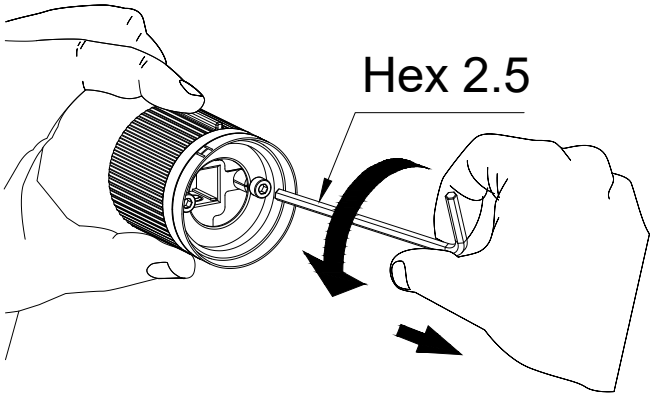
Hex 2.5

2

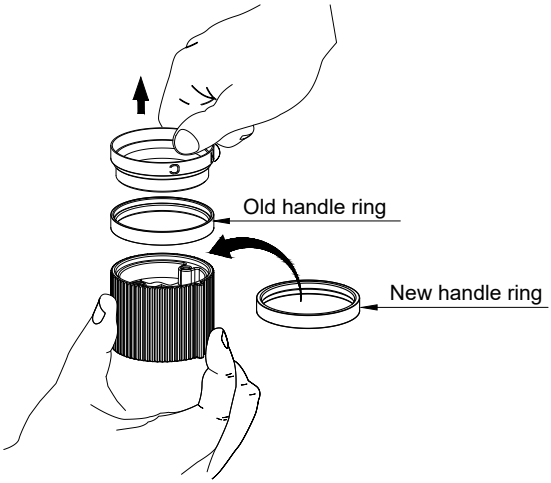

3

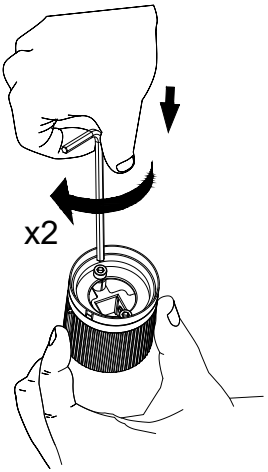

4

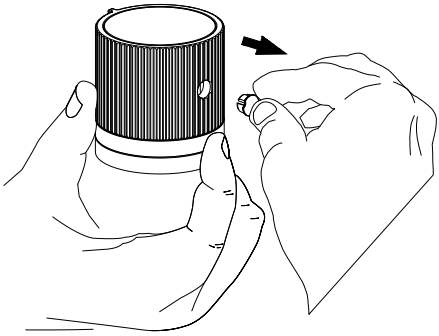

5

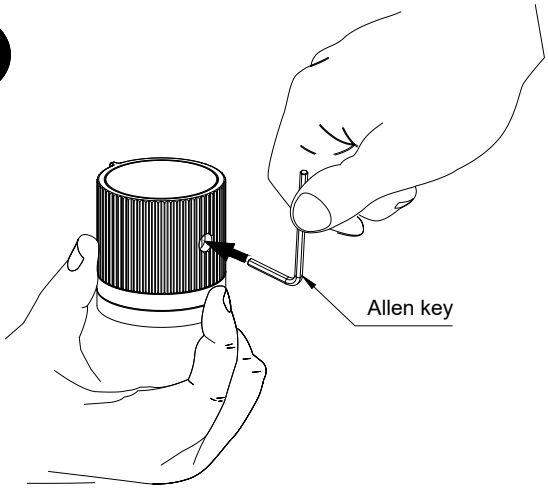

6



7

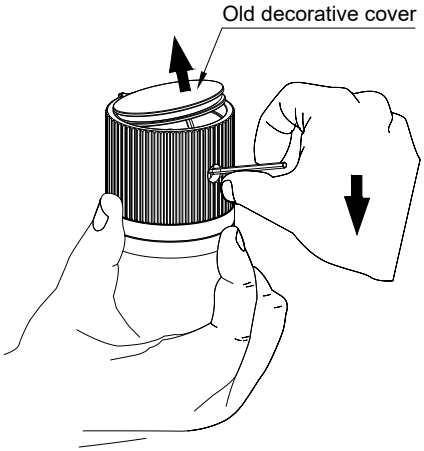

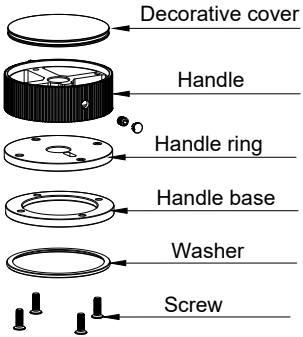
Decorative cover
Handle
Handle ring
Handle base
Washer
Screw

1

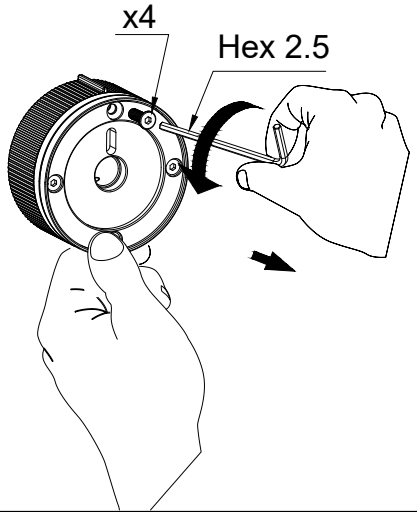
x4
Hex 2.5

2

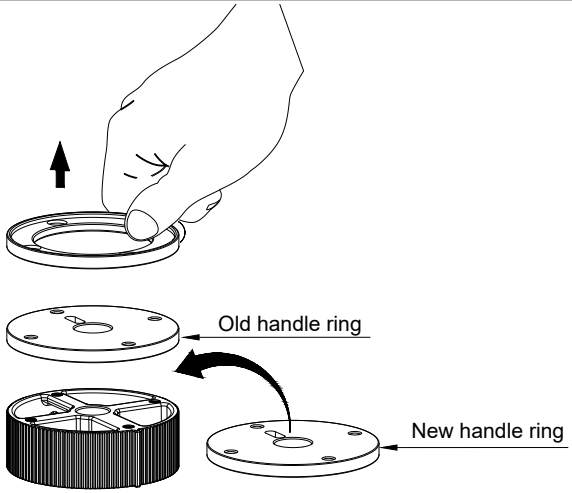

3

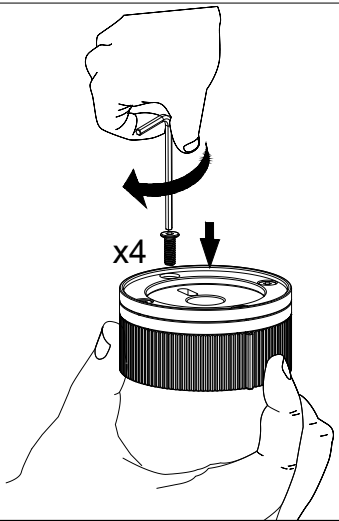

4

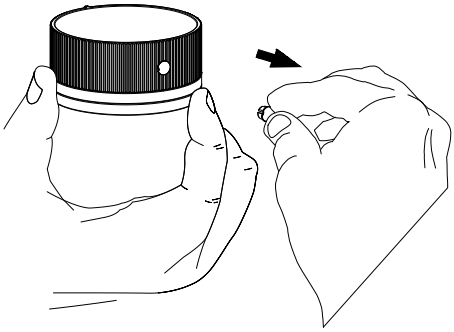

5

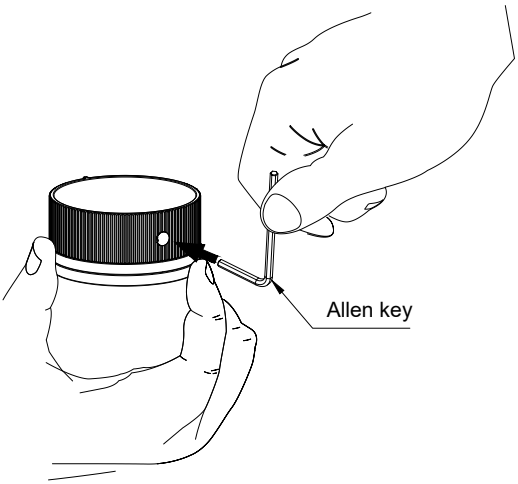

6

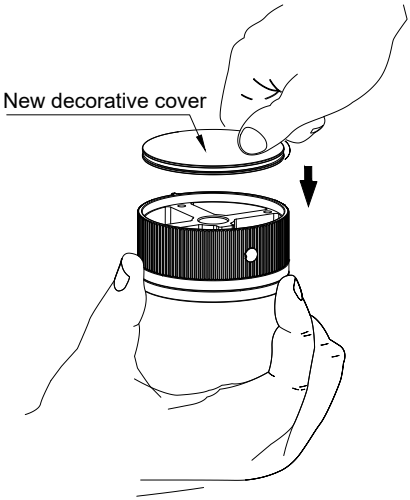

7

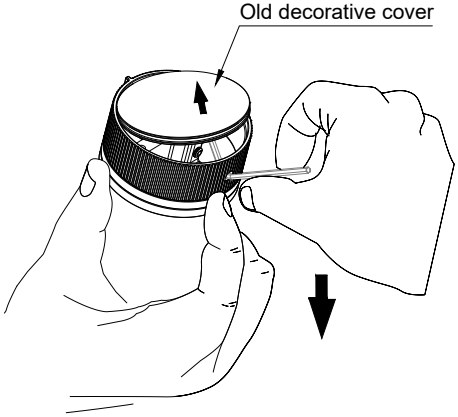



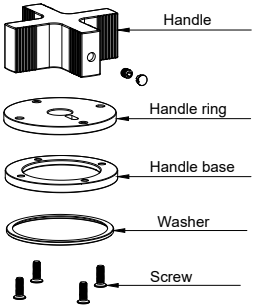

8

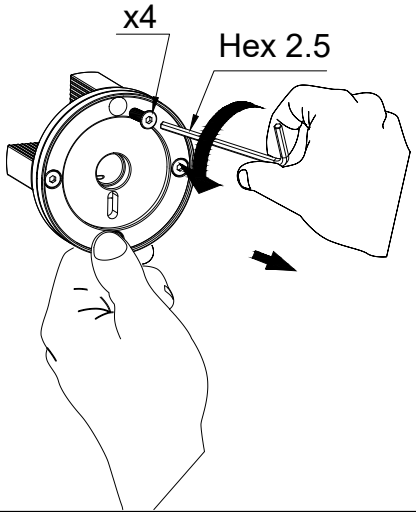

9

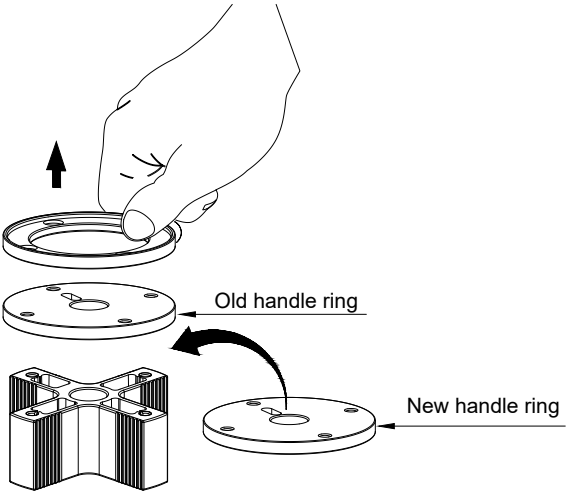

10

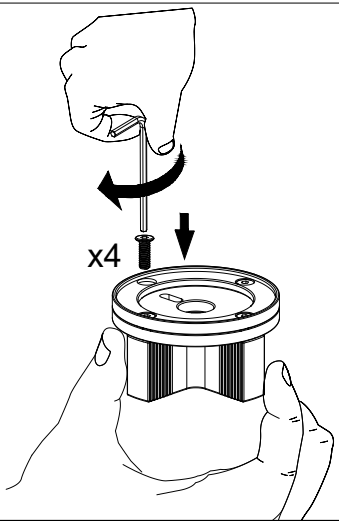

11

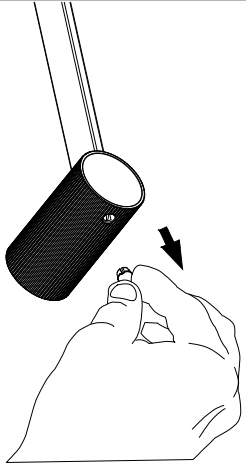

12

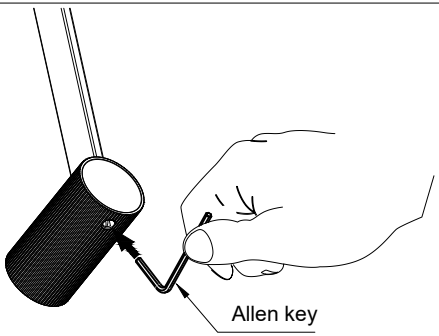

13

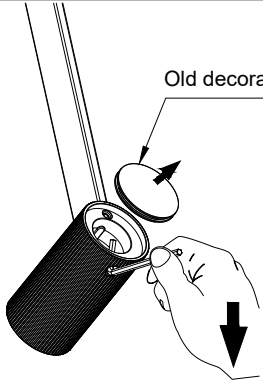

14

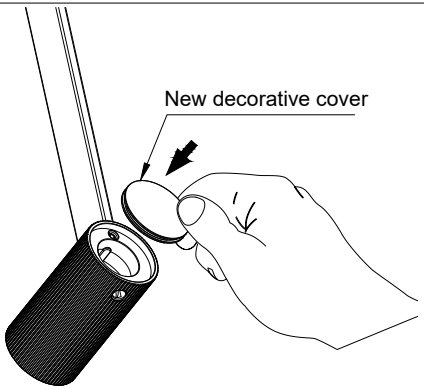

15

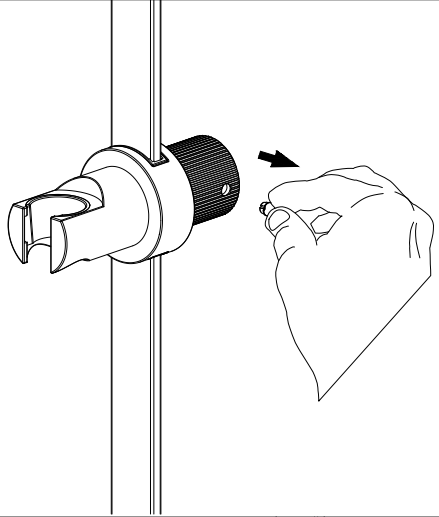

16

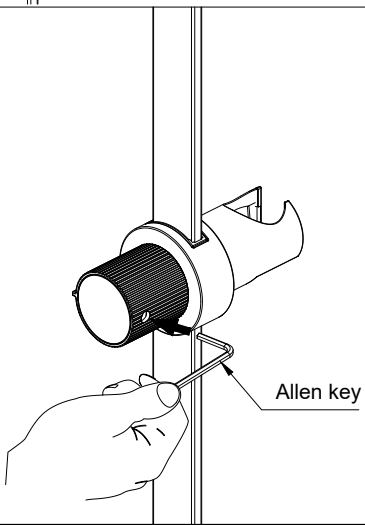

17

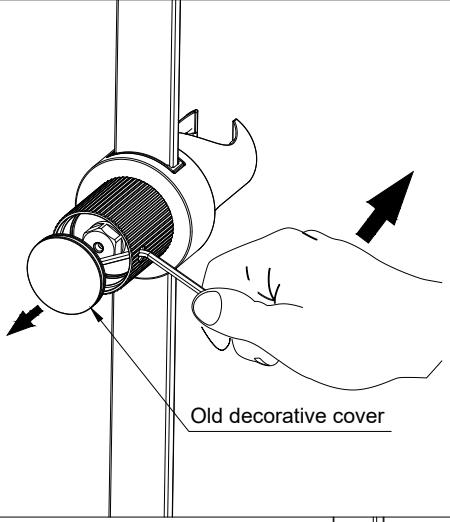

18

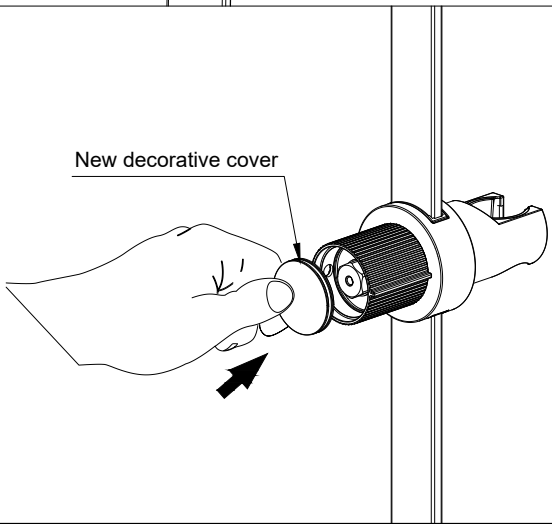

1

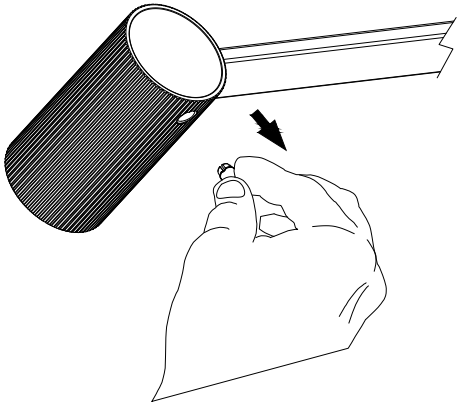

2

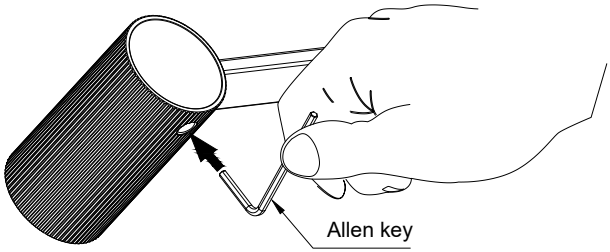

3

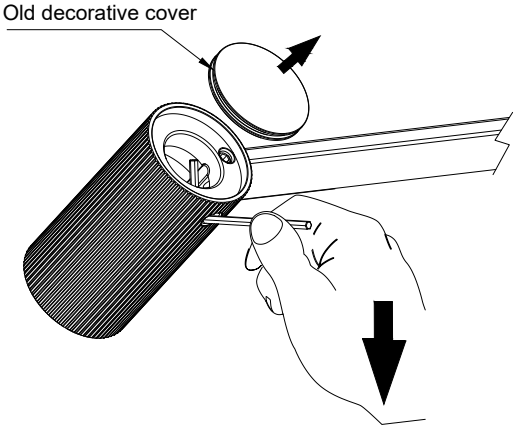

4

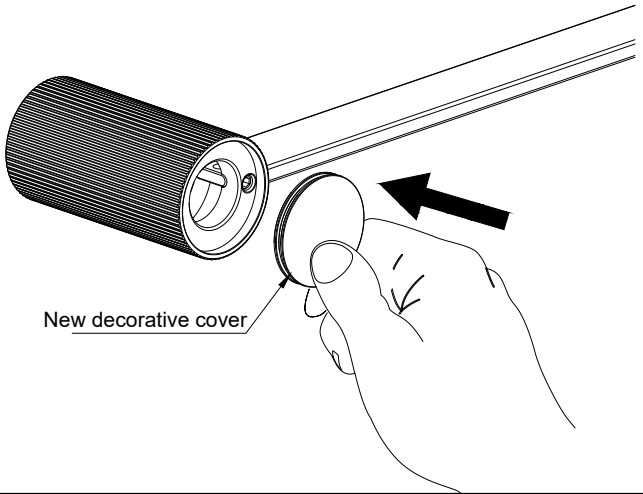

1

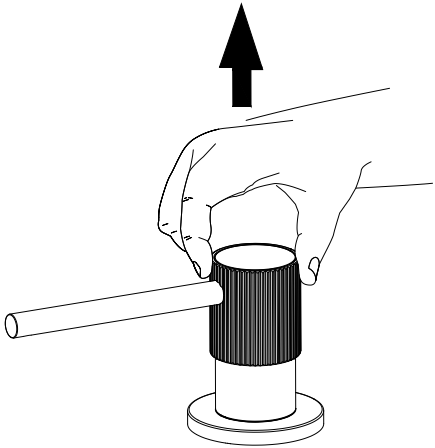

2

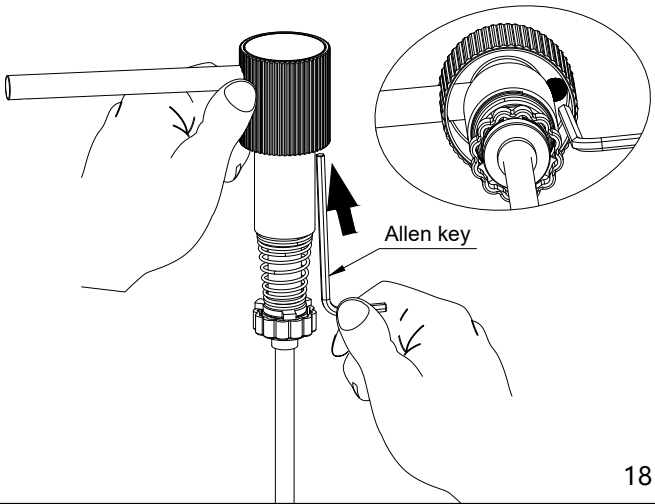

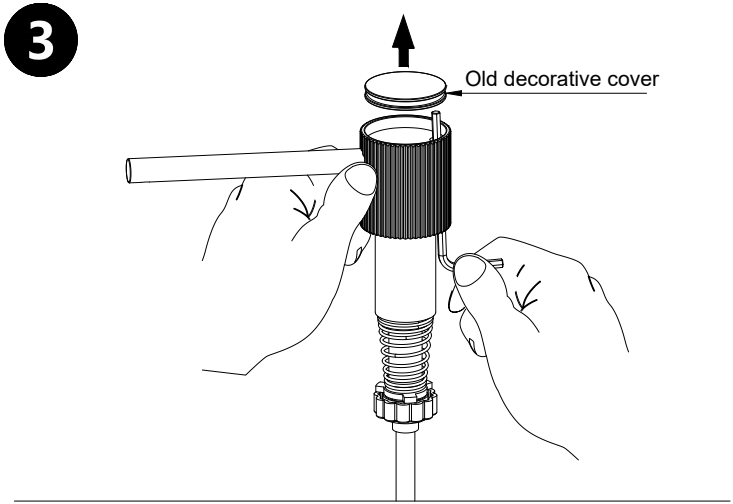
3
Old decorative cover

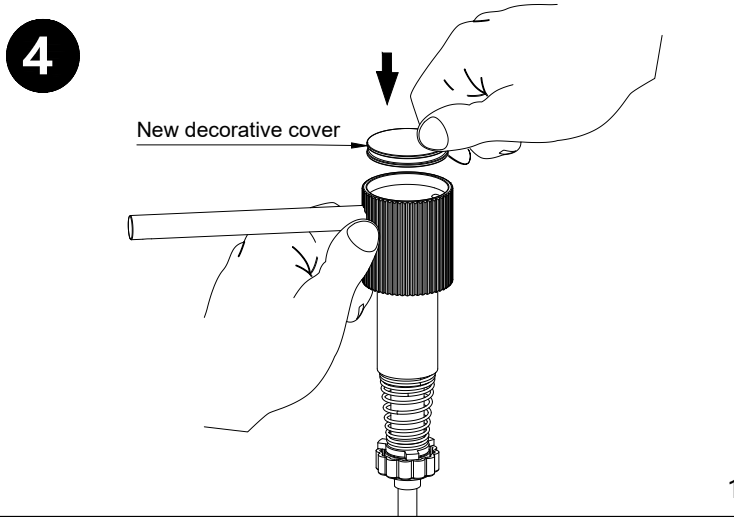
4
New decorative cover



SCAN
TO LEARN
MORE

vogtindustries.com