# INSTRUCTIONS TO ELEVATE YOUR MOOD

MOND by vogt

Pure **Quality**. Pure **Design**.

# TABLE OF CONTENTS


| PRODUCT | PAGE |
|---|---|
| · Mond Lavatory Faucet<br>· Mond Vessel Sink Faucet<br>· Mond Kitchen Faucet<br>· Mond Drinking Water Faucet<br>· Mond Free Standing Tub Filler<br>· Mond Pot Filler | 2-5 |
| · Mond 8" Lavatory Faucet<br>· Mond In-wall Lav Faucet<br>· Mond In-wall Tub Filler<br>· Mond 2-way TH shower<br>· Mond 3-way TH shower | 6-15 |
| · Mond Towel-18" OR 24"<br>· Mond Towel Holder<br>· Mond Robe Hook<br>· Mond Toilet Paper Holder | 16-17 |
| · Mond Soap Dispenser | 18-19 |


**Tools and equipment you will need:**

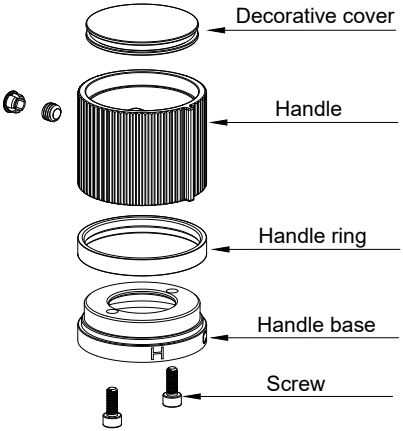
Decorative cover
Handle
Handle ring
Handle base
Screw

1

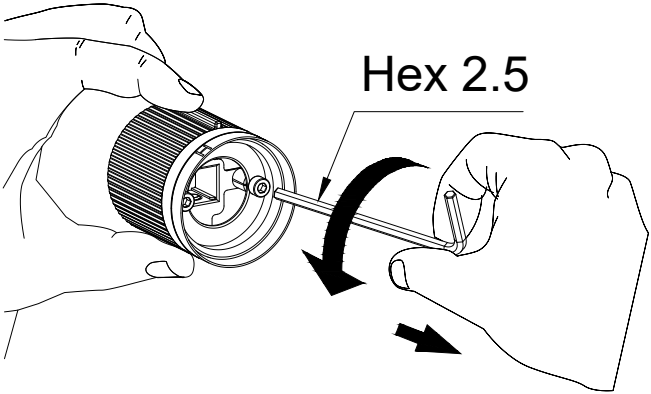
Hex 2.5

2

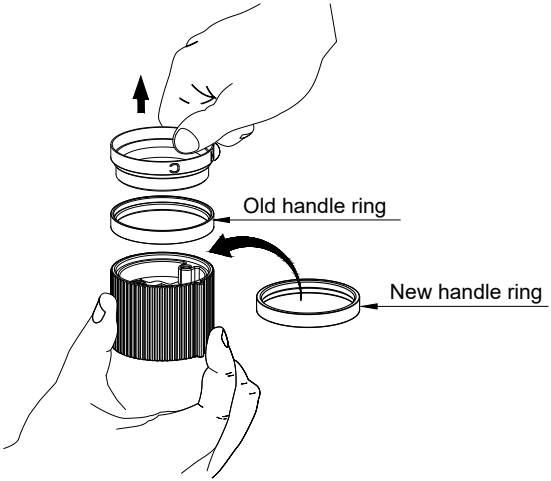


3

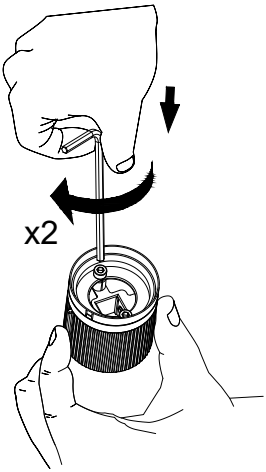

**4**

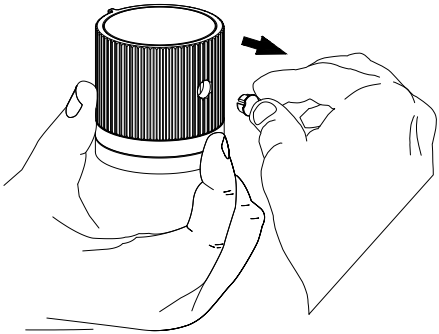

**5**

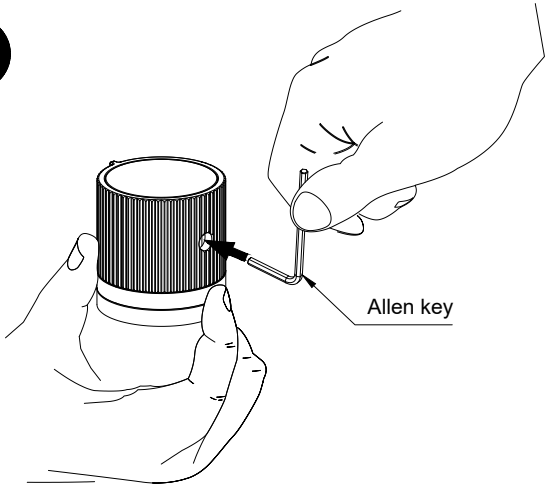

**6**

**7**

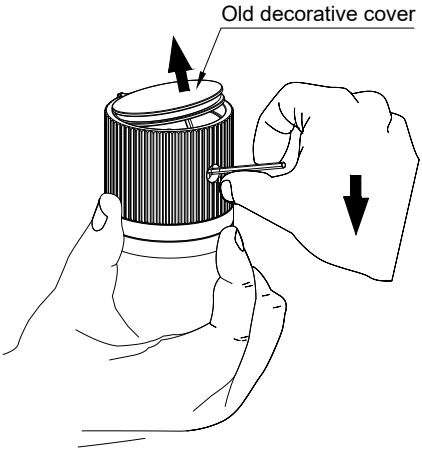

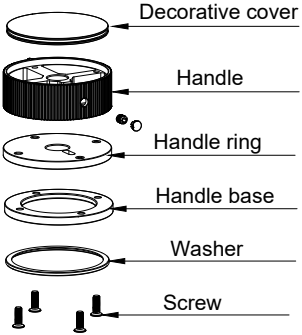
Decorative cover
Handle
Handle ring
Handle base
Washer
Screw

1

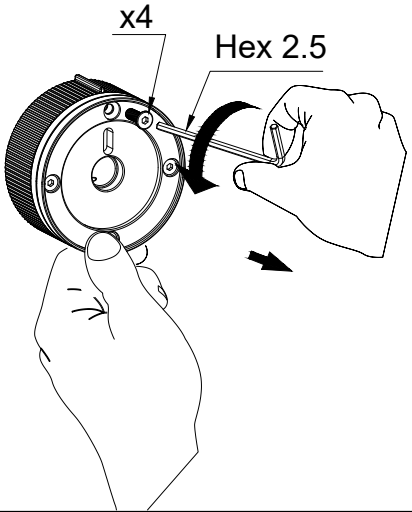
x4
Hex 2.5

2

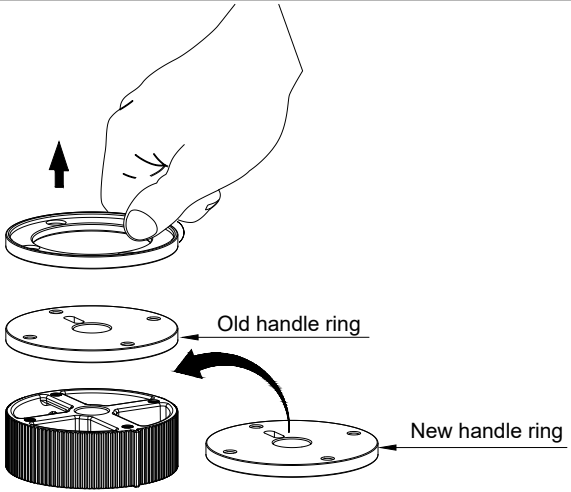


3

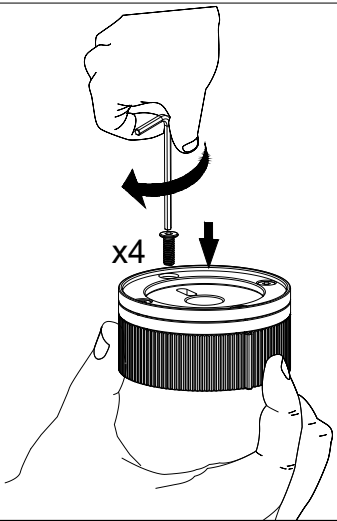

4

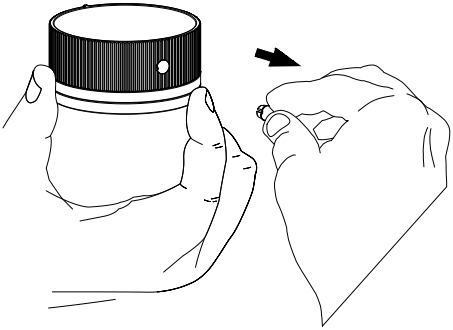

5

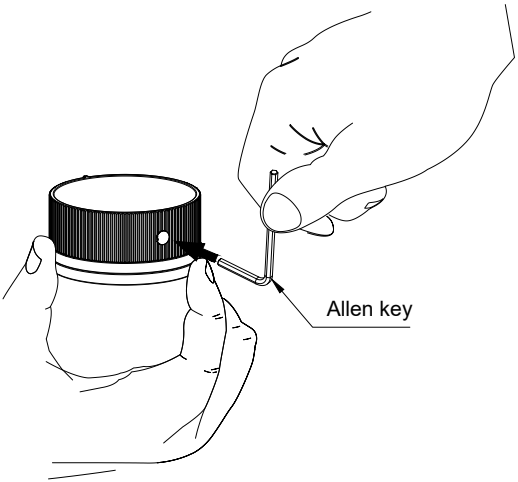

**6**

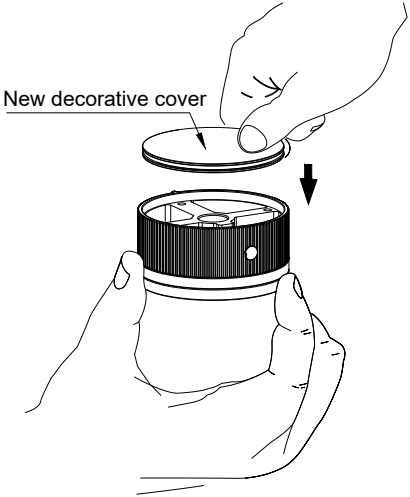


**7**

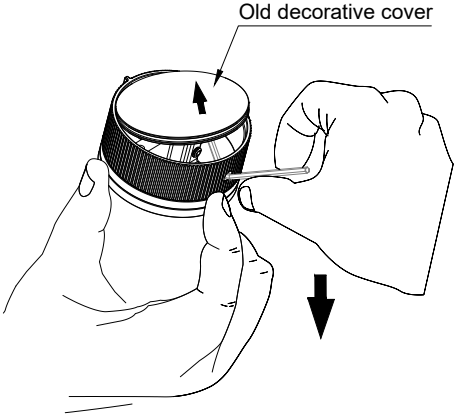

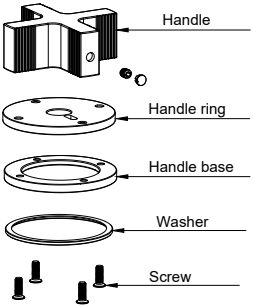


**8**

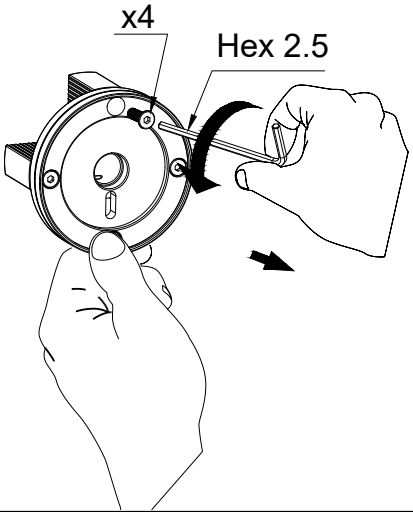

## 9

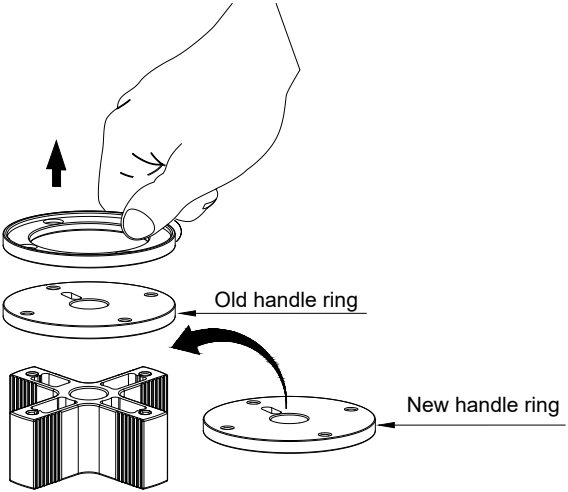


## 10

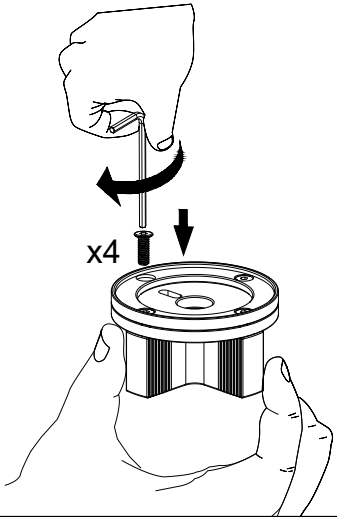

**11**

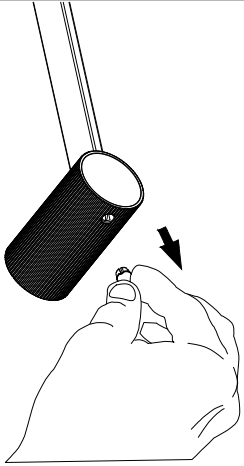

**12**

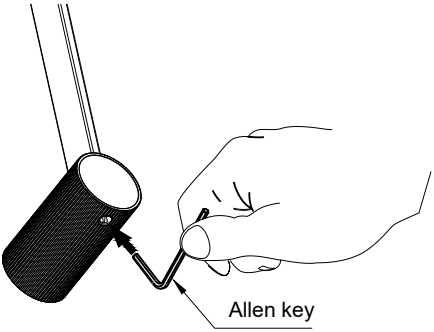

13

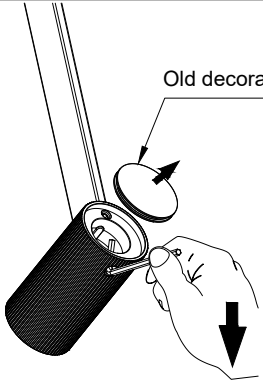


14

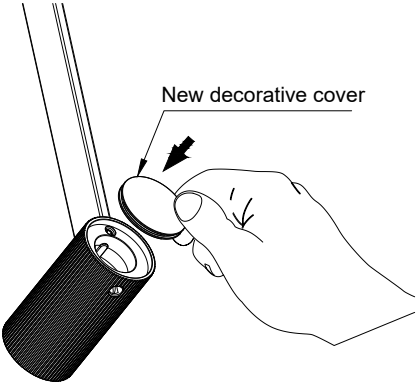

**15**

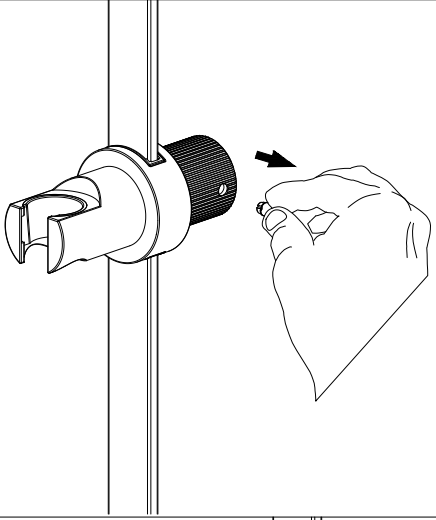

**16**

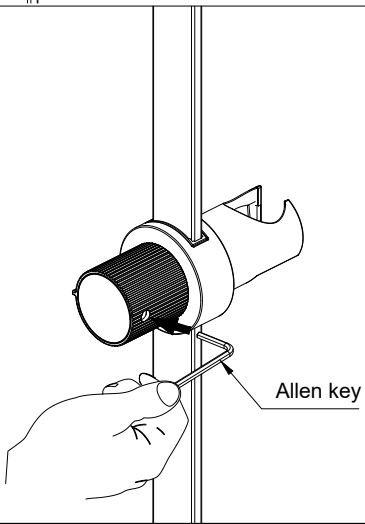

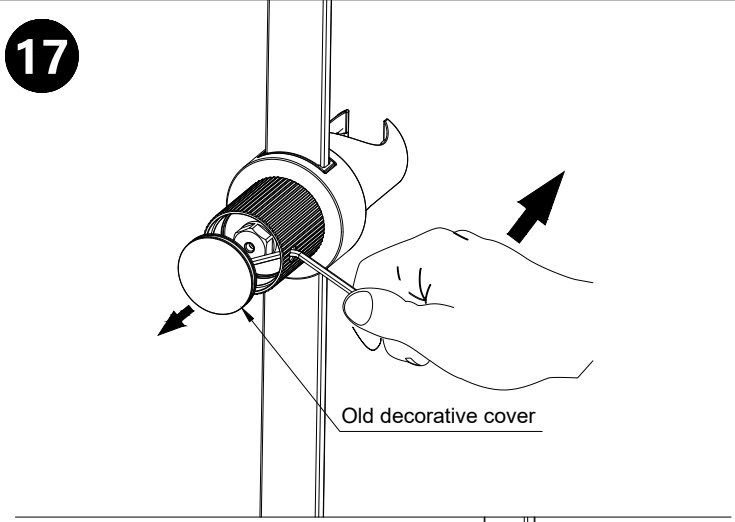
17
Old decorative cover

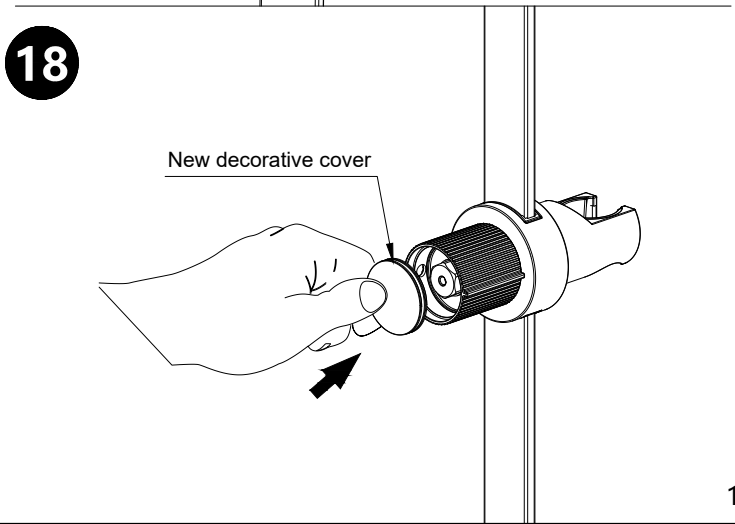
18
New decorative cover

1

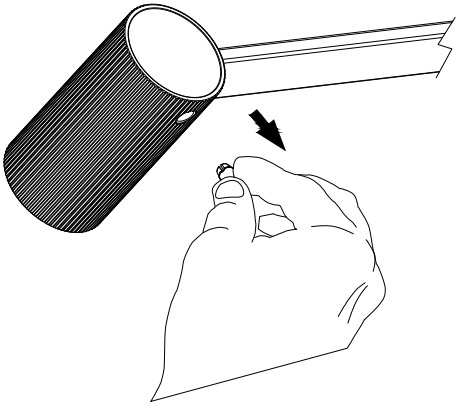

2

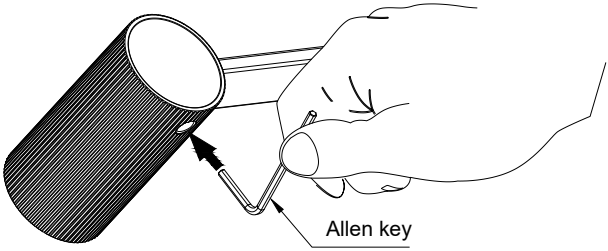

3

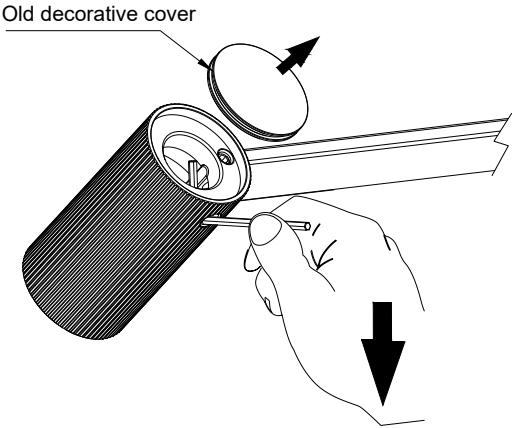


4

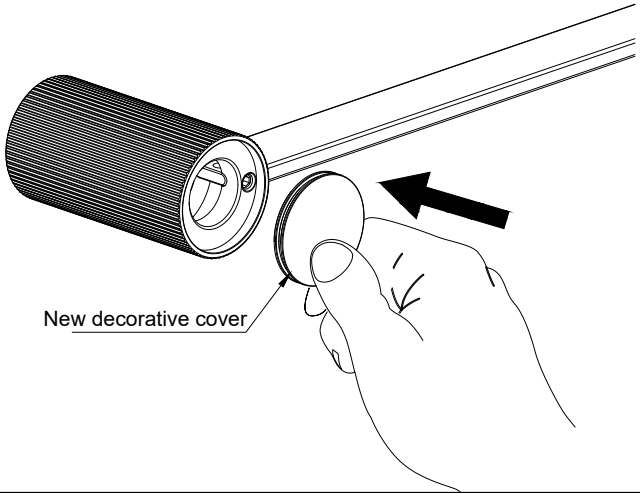

1

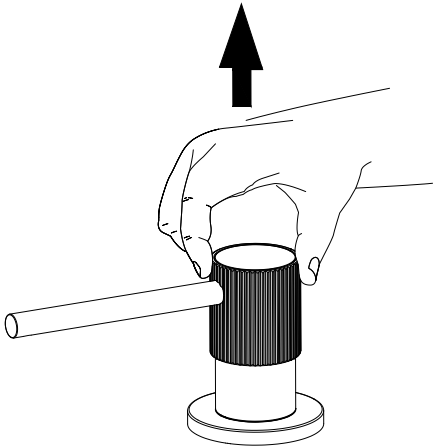

2

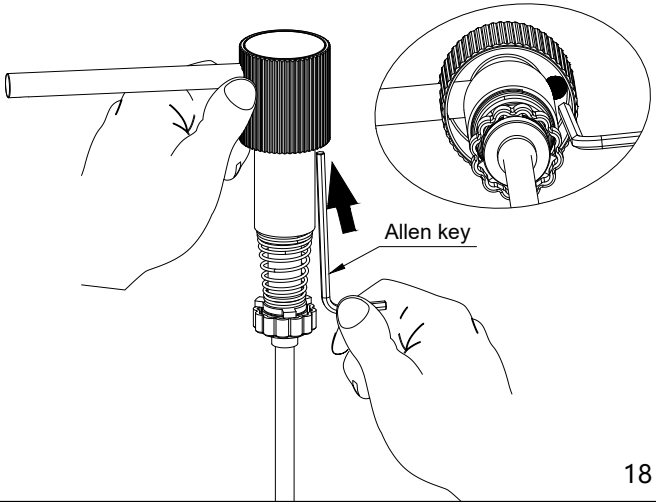

3

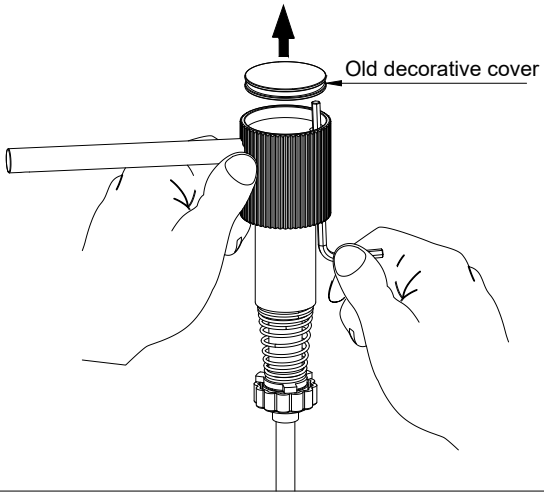


4

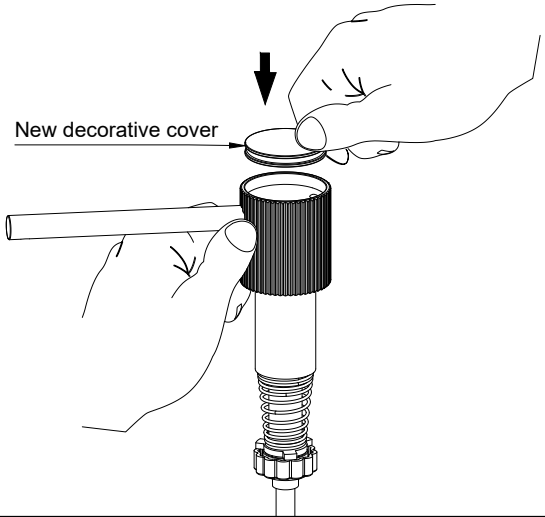

SCAN
TO LEARN
MORE

vogtindustries.com

Y5A1213X-A2